INTEGRATED EMPLOYEE PARTICIPATION SCHEMES IN THE SOUTH AFRICAN GOLD-MINING INDUSTRY: A STUDY OF THEIR EFFECTS AND DYNAMICS

BY

JEREMY WILLIAM LORD

SUBMITTED IN ACCORDANCE WITH THE REQUIREMENTS FOR THE DEGREE OF

DOCTOR OF PHILOSOPHY

IN THE FACULTY OF
ECONOMICS AND MANAGEMENT
AT THE UNIVERSITY OF NATAL

PROMOTER: PROFESSOR DAVID COLDWELL

DURBAN
FEBRUARY 1995

TO DENISE

ABSTRACT

This research study is concerned with the effects and dynamics of 'integrated' schemes of employee participation, where workers are involved in both work-related decision-making, and also share in the profits of their employer.

Prior research and the literature on employee participation has tended to concentrate on the process and effects of either financial participation in isolation, or of decision-making participation, but seldom on situations where both are employed simultaneously. Based on a thorough literature review, this study presents a 'Model of Integrated Employee Participation (incorporating moderating effects)'. The model explicates a process through which both types of worker involvement may operate together, leading to a set of behavioural and performance outcomes. Where the formal participation schemes are operationalised such that, combined, they lead to perceptions equivalent to 'psychological ownership', a substantial goal-congruence and integration of the employee with the organisation occurs. These processes lead, in turn, to influences on individual and organisational outcomes.

Antecedent and moderating variables to the operation of such 'integrated' participation schemes are identified in the model. Specifically, the effects of the schemes are postulated to be moderated by employees' biographical and personality factors, by their perceptions of managerial commitment to employee participation, and by their perceptions of aspects of the organisation's managerial system of communication and control. The relevance and implications of the model to the South African gold-mining industry are discussed.

Major pillars of this 'Model of Integrated Employee Participation (incorporating moderating effects)' were tested within a detailed investigation of the participation schemes in operation at a profitable South African gold-mining

company. This investigation was longitudinal in nature, with two major surveys being performed over a ten-month period. The findings suggested that while the effects of the 'integrated' schemes on employees' job satisfaction, performance and stability were as anticipated, the proposed moderating effects were generally non-existent or insignificant.

In order to obtain greater clarity of the dynamics of 'integrated' schemes of employee participation, a path analytic exploration of the interrelationships between the measured variables of the study was then undertaken. A detailed path model was developed and then tested, at three levels of the organisational hierarchy as well as on the entire workforce. The path model was substantially supported for the 'entire workforce', and for the largest stratum of the mine's employees, being the 'unskilled and semi-skilled' workers. Satisfaction with participation was found to be positively and significantly associated with perceived extent of participation. This applied to both the financial and decisional elements of the schemes. Job satisfaction and employee performance were also found to be positively associated with perceived extent of participation and / or satisfaction therewith. Employees' perceptions of managerial commitment to 'integrated participation' predicted their satisfaction therewith. Aspects of the organisation's system of managerial communication and control were found to significantly affect levels of job satisfaction and employee performance in the participative environment of the mine.

The model was only partially supported, however, at the more senior levels of 'management' and 'supervisors and artisans'. It thus appeared that 'integrated participation' schemes may not enhance job satisfaction and performance at the higher levels of the organisational hierarchy, and that the schemes' effects may thus be moderated by employee seniority.

The empirical findings were supportive of much of the literature on participation programmes. They were particularly consistent with 'affective' and 'contingency' explanatory

models of the effects of participation. The findings did not, however, support 'cognitive' explanatory models of the effects of participation.

ACKNOWLEDGEMENTS

I wish to express my sincere thanks to the many people and organisations for the assistance provided in this study. Particularly I would like to thank the following:

Professor David Coldwell, for his patience, guidance and helpful supervision.

My colleagues in the research group of the Department of Accounting and Finance at the University of Natal, and particularly Professor Trevor Crossman, for their help in the initial formulation of the study.

Doctors Julian Hofmeyr and Michael Murray for their assistance on statistical aspects of the research.

Ms Patsy Clarke of Computer Services, for her invaluable assistance with mastering the S.A.S. statistical programme.

The organisation which most generously offered subjects for the research surveys, and interviewing personnel.

Finally, and most importantly, my wife Denise and our sons Richard and James, who encouraged me to persevere with the project, and who made substantial sacrifices throughout.

I hereby declare that the work contained in this research, unless specifically indicated to the contrary in the text, is my own original work, and has not previously in its entirety or in part been submitted for any degree at any other university.

I further declare that opinions expressed and conclusions reached are my own and are not to be regarded as representing the views of any other person or institution.

CONTENTS

PAGE

ABSTRACT i
ACKNOWLEDGEMENTS iv
LIST OF TABLES xxiv
LIST OF FIGURES xxix

CHAPTER 1
INTRODUCTION
1.1 The need for the study 1
1.2 The aims and purposes of the study 3
1.3 The scope and limitations of the study 5
1.4 The plan of the thesis 6

THEME 1: THEORETICAL 9

CHAPTER 2
AN OVERVIEW OF PARTICIPATIVE MANAGEMENT
2.1 Introduction 10
2.2 Defining participative management 11
2.3 Conceptual frameworks for participative management . . 13
2.3.1 Jain's framework for industrial relations and participative processes 13
2.3.2 Jones and Maree's continuum of worker participation in control 15
2.3.3 Brownell's framework of participative budgeting 16
2.4 Variates of participative management 17
2.4.1 Variates of decision-making participation . . . 18
2.4.2 Variates of financial participation 20
2.4.3 Combining decision-making participation and financial participation 20
2.5 International trends in participative management . . . 22
2.5.1 European trends 23
2.5.1.1 Germany 24
2.5.1.2 The United Kingdom 25
2.5.1.3 Other European states 26
2.5.2 United States' trends 28

PAGE

2.5.3 Japanese trends 30
2.5.4 Cross-national studies of participation 31
2.5.5 A South African perspective 32
2.6 Controversy: does participative management 'work'? . . 35
2.7 Explanatory models of the effects of participative management 36
2.7.1 Cognitive models of participation 37
2.7.2 Affective models of participation 38
2.7.3 Contingency models of participation 38
2.8 Conclusion 39

CHAPTER 3
THE EFFECTS OF EMPLOYEE PARTICIPATION IN DECISION-MAKING: A THEORETICAL AND EMPIRICAL REVIEW

3.1 Introduction 41
3.2 Classifying the literature 42
3.3 The literature on the theoretical foundations of employee incentives and motivation: a review . . . 44
3.3.1 Maslow's hierarchy of needs 44
3.3.1.1 Empirical studies relating to Maslow's theory 45
3.3.2 Herzberg's two-factor theory of motivation . . 48
3.3.2.1 Empirical studies relating to Herzberg's theory 49
3.3.3 Vroom's expectancy theory 50
3.3.3.1 Empirical studies relating to Vroom's theory 50
3.3.4 Adams' equity theory 51
3.3.4.1 Empirical studies relating to Adams' theory 52
3.3.5 Porter and Lawler's model of motivation 53
3.3.5.1 Empirical studies relating to Porter and Lawler's model 56
3.4 The literature on the effects of employee participation in decision-making 57
3.5 The literature on the effects of employee participation in decision-making on their work-related attitudes 59

PAGE

3.5.1 Propositions and theory-building 59
3.5.2 Empirical studies: hypothesis-testing research 61
3.6 The literature on the effects of employee participation in decision-making on their productivity and performance 65
3.6.1 Propositions and theory-building 65
3.6.2 Empirical studies: hypothesis-testing research 65
3.7 The literature on the effects of employee participation in decision-making on their absenteeism and turnover 68
3.7.1 Propositions and theory-building 68
3.7.2 Empirical studies: hypothesis-testing research 68
3.8 The literature on other effects of employee participation in decision-making 69
3.8.1 Propositions and theory-building 69
3.8.2 Empirical studies: hypothesis-testing research 70
3.9 The literature on the effects of employee participation in decision-making relating to specific work-issues 72
3.9.1 The literature on the effects of employee participation in work-goal setting 72
3.9.1.1 Propositions and theory-building . . . 72
3.9.1.2 Empirical studies: hypothesis-testing research 73
3.9.2 The literature on the effects of employee participation in budget-setting 76
3.9.2.1 Propositions and theory-building . . . 76
3.9.2.2 Empirical studies: hypothesis-testing research 77
3.9.3 The literature on the effects of employee participation in decision-making relating to other specific work issues 79
3.9.3.1 Propositions and theory-building . . . 79
3.9.3.2 Empirical studies: hypothesis-testing research 80
3.10 The literature on the effects of actual versus perceived extents of employee participation in decision-making 81

PAGE

3.10.1 Propositions and theory-building 81
3.10.2 Empirical studies: hypothesis-testing research 81
3.11 The literature on the empirical testing of explanatory models of the effects of employee participation in decision-making 82
3.11.1 Empirical support for cognitive models of participation 83
3.11.2 Empirical support for affective models of participation 84
3.11.3 Empirical support for contingency models of participation 84
3.12 The literature on potential moderators of the effects of employee participation in decision-making 85
3.12.1 Propositions and theory-building 85
3.12.2 Empirical studies: hypothesis-testing research 86
3.13 The literature on other issues regarding the effects of employee participation in decision-making 87
3.14 Implications for this study 87
3.15 Conclusion 88

CHAPTER 4
FINANCIAL PARTICIPATION BY EMPLOYEES:
A THEORETICAL AND EMPIRICAL REVIEW

4.1 Introduction 89
4.2 The role of financial participation programmes 90
4.3 The literature on the use of pay as an incentive for employees: theoretical perspectives 91
4.3.1 Result-based payment plans: eastern and western approaches 92
4.3.2 Variates of result-based payment plans 94
4.3.3 Collective bonuses based on profits generated . 95
4.3.3.1 Profit sharing and cost saving schemes 96
4.3.3.2 Non-cash-based profit-sharing schemes . 96
4.4 The literature on the effects of result-based payment plans 97
4.4.1 The literature on the effects of result-based payment plans on employees' attitudes and motivation 99

PAGE

4.4.1.1 Propositions and theory-building . . . 99
4.4.1.2 Empirical studies: hypothesis-testing research 101
4.4.2 The literature on the effects of result-based payment plans on employees' productivity and performance 102
4.4.2.1 Propositions and theory-building . . 102
4.4.2.2 Empirical studies: hypothesis-testing research 103
4.4.3 The literature on other effects of result-based payment plans 106
4.4.3.1 Propositions and theory-building . . 106
4.4.3.2 Empirical studies: hypothesis-testing research 106
4.5 Caveats in the literature regarding the design and implementation of result-based payment plans 108
4.6 A contingency approach to designing a system of remuneration and reward 110
4.7 Implications for this study 111
4.8 Conclusion 111

CHAPTER 5
THE EFFECTS OF INTEGRATED SYSTEMS OF FINANCIAL AND DECISION-MAKING PARTICIPATION BY EMPLOYEES: A THEORETICAL AND EMPIRICAL REVIEW

5.1 Introduction 113
5.2 The literature on the effects of integrated systems of financial and decision-making participation by employees 114
5.2.1 Propositions and theory-building 115
5.2.2 Empirical studies: hypothesis-testing research 122
5.3 Implications for this study 128
5.4 Conclusion 128

CHAPTER 6
EMPLOYEES' ATTITUDES AND WORK BEHAVIOUR: A THEORETICAL AND EMPIRICAL REVIEW

6.1 Introduction 130

PAGE

6.2 The literature on the relationships between employees' attitudes and their behaviour 131
6.2.1 Propositions and theory-building 131
6.2.2 Empirical studies: hypothesis-testing research 137
6.3 Implications for this study 143
6.4 Conclusion 144

CHAPTER 7
FACTORS THAT MODERATE THE EFFECTS OF EMPLOYEE PARTICIPATION SCHEMES: A THEORETICAL AND EMPIRICAL REVIEW

7.1 Introduction 146
7.2 The literature on factors that moderate the effects of employee participation schemes 146
7.2.1 Propositions and theory-building 146
7.2.1.1 The moderating effects of individual biographical factors 148
7.2.1.2 The moderating effects of individual personality factors 149
7.2.1.3 The moderating effect of managerial commitment to employee participation 151
7.2.1.4 The moderating effects of aspects of the organisation's system of managerial communication and control 153
7.2.1.5 The moderating effects of other factors 156
7.2.2 Empirical studies: hypothesis-testing research 159
7.2.2.1 Results of research into the moderating effects of individual biographical factors 159
7.2.2.2 Results of research into the moderating effects of individual personality factors 160
7.2.2.3 Results of research into the moderating effect of managerial commitment to employee participation 161

PAGE

7.2.2.4 Results of research into the moderating effects of aspects of the organisation's system of managerial communication and control 163
7.2.2.5 Results of research into the moderating effects of other factors 165
7.3 Implications for this study 166
7.4 Conclusion 167

CHAPTER 8
THE DEVELOPMENT OF A MODEL OF INTEGRATED EMPLOYEE PARTICIPATION

8.1 Introduction 168
8.2 Propositions arising from the literature review . . 170
8.2.1 Proposition 1: the forms of participation . . 170
8.2.2 Proposition 2: the object of participation . 171
8.2.3 Proposition 3: the extent of participation . 172
8.2.4 Proposition 4: operationalised integrated participation 173
8.2.5 Proposition 5: the moderating impact of aspects of the organisation's system of managerial communication and control 174
8.2.5.1 Proposition 6: the moderating impact of work-goal attainability 175
8.2.5.2 Proposition 7: the moderating impact of supervisors' evaluation styles . . . 176
8.2.5.3 Proposition 8: the moderating impact of performance and information feedback 176
8.2.5.4 Proposition 9: the moderating impact of the overlap of assigned areas of responsibility and control 177
8.2.6 Propositions 10 and 11: the effects of management's commitment to employee participation 177
8.2.7 Propositions 12 and 13: the state of perceived ('psychological') participation 178
8.2.8 Individual moderators of the effects of participation 180

PAGE

8.2.8.1 Proposition 14: the moderating effects of employee biographical attributes . 180
8.2.8.2 Proposition 15: the moderating effects of employee personality attributes . 180
8.2.9 Propositions 16, 17 and 18: worker integration 181
8.2.10 Propositions 19 and 20: the behavioural effects of participation 182
8.3 The implications of the model for this study 183
8.4 Conclusion 184

THEME 2: METHODOLOGICAL 187

CHAPTER 9
THE RESEARCH PROBLEM AND HYPOTHESES
9.1 Introduction 188
9.2 The research problem 188
9.2.1 Formulating the problem 189
9.2.2 The statement of the problem 189
9.3 Research subproblems and hypotheses 190
9.3.1 Subproblem 1: Associations between participation, attitudes and performance . . 190
9.3.1.1 Hypothesis 1 190
9.3.1.2 Hypothesis 2 191
9.3.1.3 Hypothesis 3 191
9.3.1.4 Hypothesis 4 191
9.3.1.5 Hypothesis 5 192
9.3.2 Subproblem 2: Moderating effects 192
9.3.2.1 Hypothesis 6 192
9.3.2.2 Hypothesis 7 193
9.3.2.3 Hypothesis 8 193
9.3.3 Subproblem 3: Work-level consistency of moderating effects 194
9.3.3.1 Hypothesis 9 194
9.3.4 Subproblem 4: Work-site consistency of moderating effects 195
9.3.4.1 Hypothesis 10 195
9.3.5 Subproblem 5: Longitudinal consistency of moderating effects 195

PAGE

9.3.5.1 Hypothesis 11 195
9.3.6 Subproblem 6: Longitudinal support for a path model 196
9.4 Conclusion 197

CHAPTER 10
THE RESEARCH DESIGN AND METHODOLOGY
10.1 Introduction 198
10.2 The methodological and epistemological foundations of the study 198
10.3 The statistical hypotheses 201
10.3.1 Hypothesis 1 201
10.3.2 Hypothesis 2 202
10.3.3 Hypothesis 3 202
10.3.4 Hypothesis 4 202
10.3.5 Hypothesis 5 203
10.3.6 Hypothesis 6 203
10.3.7 Hypothesis 7 203
10.3.8 Hypothesis 8 204
10.3.9 Hypothesis 9 204
10.3.10 Hypothesis 10 204
10.3.11 Hypothesis 11 205
10.4 The research design 205
10.4.1 The research strategy 205
10.4.2 Selecting the subject organisation 209
10.4.3 Selecting the respondent samples 212
10.4.3.1 The pilot study 213
10.4.3.2 The first survey 213
10.4.3.3 The second survey 215
10.4.4 Selecting the variables to be measured . . . 218
10.5 The measuring instruments 220
10.5.1 Instruments to measure employees' perceived extent of participation 222
10.5.1.1 The Perceived Extent of Financial Participation instrument 222
10.5.1.2 The Perceived Extent of Participation in General Work-Related Decision-Making instrument 223

PAGE

10.5.1.3 The Perceived Extent of Participation in Work Target Setting instrument . 224
10.5.1.4 The Perceived Extent of Participation in Safety-Related Decision-Making instrument 225
10.5.2 Instruments to measure employee attitudes towards participation and work 226
10.5.2.1 The Satisfaction with Financial Participation instrument 226
10.5.2.2 The Satisfaction with Participation in Work-Related Decision-Making instrument 226
10.5.2.3 The Job Satisfaction instrument . . 227
10.5.2.4 The Organisational Commitment instrument 230
10.5.2.5 The Propensity to Remain instrument 230
10.5.3 Instruments to measure aspects of employees' personalities 231
10.5.3.1 The Work Locus of Control instrument 231
10.5.3.2 The Need for Independence instrument 232
10.5.3.3 The Authoritarianism instrument . . 233
10.5.4 Instruments to measure employee perceptions of the organisation's system of managerial communication and control 233
10.5.4.1 The Perceived Attainability of Work Targets instrument 234
10.5.4.2 The Perceived Difficulty of Work Targets instrument 234
10.5.4.3 The Perceived Fairness of Immediate Supervisor's Style of Performance Evaluation instrument 234
10.5.4.4 The Perceived Ambiguity of Immediate Supervisor's Style of Performance Evaluation instrument 235
10.5.4.5 The Perceived Extent of Overlap of Employees' Assigned Areas of Responsibility and Control instrument 235

PAGE

10.5.4.6 The Perceived Extent of Feedback Relating to Employees' Performance instrument 236
10.5.5 Instruments to measure employee perceptions of management's commitment to employee participation 236
10.5.5.1 The Perceived Extent of Managerial Commitment to Financial Participation instrument 237
10.5.5.2 The Perceived Extent of Managerial Commitment to Participation in General Work-Related Decision-Making instrument 237
10.5.5.3 The Perceived Extent of Managerial Commitment to Participation in Work Target Setting instrument 238
10.5.5.4 The Perceived Extent of Managerial Commitment to Participation in Safety-Related Decision-Making instrument 239
10.5.6 Instruments to measure employee performance 239
10.5.6.1 The Employee Self-Rated Performance instrument 241
10.5.6.2 The Employee Supervisor-Rated Performance instrument 242
10.6 The scoring techniques 243
10.7 Translation into the vernaculars 244
10.8 The administration of the questionnaires 245
10.8.1 The pilot survey 246
10.8.2 The first data-collection survey 248
10.8.3 The second data-collection survey 250
10.9 The statistical methodology 251
10.9.1 The reliability and validity of the measuring instruments 252
10.9.2 The levels of measurement issue 253
10.9.3 Determining the levels of significance . . . 256
10.9.4 Two-tailed tests 257
10.9.5 Testing hypotheses of association 257

PAGE

10.9.6 Testing hypotheses of moderating effects . . 257
10.9.7 Seeking support for an exploratory path model 259
10.10 Assumptions and limitations of the research 261
10.11 Conclusion 262

THEME 3: EMPIRICAL 263

CHAPTER 11
THE RELIABILITY AND VALIDITY OF THE MEASURING INSTRUMENTS

11.1 Introduction 264
11.2 The reliability of the measuring instruments 264
11.3 The factor structure of the measuring instruments . 265
11.3.1 The factor analysis methodology 266
11.3.2 The factor structure of all the questionnaire items 267
11.3.3 The factor structure of the instruments measuring employees' perceived extent of participation 270
11.3.3.1 Discussion of the factors obtained 273
11.3.4 The factor structure of the instruments measuring employee personality constructs . 275
11.3.4.1 Discussion of the factors obtained 277
11.3.5 The factor structure of the instruments measuring employee perceptions of the organisation's system of managerial communication and control 279
11.3.5.1 Discussion of the factors obtained 281
11.3.6 The factor structure of the instruments measuring employee perceptions of management's commitment to employee participation 285
11.3.6.1 Discussion of the factors obtained 287
11.3.7 The factor structure of the instruments measuring employee attitudes towards participation and work 289
11.3.7.1 Discussion of the factors obtained 291

PAGE

11.3.8 The factor structure of the instruments measuring employee performance and propensity to remain in employment 294
11.3.8.1 Discussion of the factors obtained 295
11.3.9 Factor analysis results: summary 297
11.4 Conclusion 305

CHAPTER 12
THE RESULTS OF THE STATISTICAL ANALYSES AND THE TESTING OF THE HYPOTHESES

12.1 Introduction 306
12.2 Descriptive statistics 306
12.2.1 Descriptive statistics: first survey 307
12.2.2 Descriptive statistics: second survey . . . 307
12.2.3 Assessing the normality of distribution of the test data 308
12.3 Results of the correlational analyses and the testing of hypotheses 1 to 5 309
12.3.1 First survey correlations 309
12.3.2 Second survey correlations 310
12.3.3 Testing hypotheses of association 310
12.3.3.1 Hypothesis 1 310
12.3.3.2 Hypothesis 2 311
12.3.3.3 Hypothesis 3 312
12.3.3.4 Hypothesis 4 314
12.3.3.5 Hypothesis 5 315
12.3.3.6 Summary and conclusion 316
12.4 Results of the moderated multiple regression analyses and the testing of hypotheses 6 to 11 . . . 317
12.4.1 First survey results 319
12.4.2 Second survey results 319
12.4.3 Testing hypotheses of moderating effects . . 320
12.4.3.1 Hypothesis 6 321
12.4.3.2 Hypothesis 7 322
12.4.3.3 Hypothesis 8 324
12.4.3.4 Hypothesis 9 325
12.4.3.5 Hypothesis 10 332
12.4.3.6 Hypothesis 11 338

PAGE

12.4.3.7 Summary and conclusion 340
12.5 Conclusion 341

CHAPTER 13
THE RESULTS OF THE EXPLORATORY ANALYSES
13.1 Introduction 342
13.2 The results of the exploratory multiple regression analyses 343
13.2.1 Predictors of the 'Satisfaction with Financial Participation' variable scores 344
13.2.2 Predictors of the 'Satisfaction with Participation in Work-Related Decision-Making' variable scores 347
13.2.3 Predictors of the 'Organisational Commitment' variable scores 349
13.2.4 Predictors of the 'Job Satisfaction' variable scores 351
13.2.5 Predictors of the 'Employees' Propensity to Remain' variable scores 354
13.2.6 Predictors of the 'Employees' Self-Rated Performance' variable scores 355
13.2.7 Predictors of the 'Employees' Supervisor-Rated Performance' variable scores 357
13.2.8 Conclusion 359
13.3 The results of the exploratory moderated multiple regression analyses 360
13.4 The development and testing of a path model of integrated employee participation 366
13.4.1 The development of the path model 366
13.4.2 The results of empirically testing the path model 376
13.4.2.1 The results of testing the model on the whole sample 379
13.4.2.1.1 First survey results: whole sample 379
13.4.2.1.2 Second survey results: whole sample 382

PAGE

13.4.2.2 The results of testing the model on the management stratum 385
13.4.2.2.1 First survey results: management stratum . . . 385
13.4.2.2.2 Second survey results: management stratum . . . 385
13.4.2.3 The results of testing the model on the supervisors and artisans stratum 390
13.4.2.3.1 First survey results: supervisors and artisans stratum 391
13.4.2.3.2 Second survey results: supervisors and artisans stratum 393
13.4.2.4 The results of testing the model on the unskilled and semi-skilled stratum 396
13.4.2.4.1 First survey results: unskilled and semi-skilled stratum 396
13.4.2.4.2 Second survey results: unskilled and semi-skilled stratum 396
13.5 Conclusion 401

CHAPTER 14
THE RESULTS OF THE QUALITATIVE DATA ANALYSIS

14.1 Introduction 403
14.2 Analysis of responses to the open-ended questionnaire items 404
14.2.1 Financial participation: qualitative findings 404
14.2.1.1 Analysis of responses to the item: 'Things that I think are good about the bonus scheme' 404
14.2.1.2 Analysis of responses to the item: 'Things that I think are bad about the bonus scheme' 407

PAGE

14.2.2 Decision-making participation: qualitative findings 410
14.2.2.1 Analysis of responses to the item: 'Things that I think are good about the (decision-making) participation schemes' 410
14.2.2.2 Analysis of responses to the item: 'Things that I think are bad about the (decision-making) participation schemes' 413
14.3 Conclusion 416

CHAPTER 15
DISCUSSION OF THE FINDINGS, CONCLUSIONS AND RECOMMENDATIONS

15.1 Introduction 417
15.2 Discussion of the explanatory findings 418
15.2.1 Discussion of the results in relation to the hypotheses of association 418
15.2.2 Discussion of the results in relation to the hypotheses of moderating effects 422
15.2.3 Discussion of the results in relation to the hypothesis of work-level specific moderating effects 424
15.2.4 Discussion of the results in relation to the hypothesis of work-site specific moderating effects 425
15.2.5 Discussion of the results in relation to the hypothesis of time-specific moderating effects 425
15.2.6 Discussion of the explanatory results in relation to providing support for the 'Model of Integrated Employee Participation (incorporating moderating effects)' 428
15.2.7 Conclusion 429
15.3 Discussion of the exploratory results 429

PAGE

15.3.1 Discussion of the results of the exploratory 'backward elimination' multiple regression analyses 430
15.3.2 Discussion of the results of the exploratory moderated multiple regression analyses . . . 431
15.3.3 Discussion of the results of testing the path model of Integrated Employee Participation . 436
15.3.3.1 Discussion of the results of testing the path model on the whole sample 437
15.3.3.2 Discussion of the results of testing the path model on the management stratum 442
15.3.3.3 Discussion of the results of testing the path model on the supervisors and artisans stratum 444
15.3.3.4 Discussion of the results of testing the path model on the unskilled and semi-skilled stratum 445
15.3.4 Discussion of the exploratory results in relation to providing support for the 'Model of Integrated Employee Participation (incorporating moderating effects)' 449
15.3.5 Conclusion 450
15.4 Summary and conclusions 450
15.4.1 Themes and findings - an overview and conclusions 450
15.4.1.1 Theme 1: theoretical 450
15.4.1.2 Theme 2: methodological 452
15.4.1.3 Theme 3: empirical 453
15.4.2 Implications for current theories of employee participation 454
15.4.2.1 Implications for cognitive explanatory models of the effects of employee participation 455
15.4.2.2 Implications for contingency explanatory models of the effects of employee participation 456

PAGE

15.4.2.3 Implications for affective explanatory models of the effects of employee participation 457
15.5 Limitations of the study 458
15.6 Recommendations for further research 460
15.7 Conclusion 461

REFERENCES 464

APPENDIX A: PARTICIPATION QUESTIONNAIRE 514

APPENDIX B: DESCRIPTIVE STATISTICS 530

APPENDIX C: INTERCORRELATION MATRICES 538

APPENDIX D: MODERATED MULTIPLE REGRESSION REPORTS . 567

APPENDIX E: PATH ANALYSIS MULTIPLE REGRESSION REPORTS 619

LIST OF TABLES

TABLE		PAGE
2.1	Industrial relations system and participative processes: a conceptual framework	14
2.2	Some types and levels of employee involvement	19
2.3	Summary of participation types found in H.S.R.C. survey	34
10.1	Hierarchical stratification of the employee population	213
10.2	Characteristics of the first sample	216
10.3	Characteristics of the second sample	217
10.4	Variable codes and names	219
10.5	Response rate: first data-wave	250
10.6	Response rate: second data-wave	251
11.1	Cronbach alpha reliability coefficients	265
11.2	'Promax' rotated factor structure: 'participation variables'	272
11.3	Factor correlation matrix: 'participation variables'	272
11.4	'Promax' rotated factor structure: 'personality variables'	276
11.5	Factor correlation matrix: 'personality variables'	277
11.6	'Promax' rotated factor structure: 'managerial control system variables'	280
11.7	Factor correlation matrix: 'managerial control system variables'	281
11.8	'Promax' rotated factor structure: 'managerial commitment variables'	286
11.9	Factor correlation matrix: 'managerial commitment variables'	287
11.10	'Promax' rotated factor structure: 'satisfaction variables'	292
11.11	Factor correlation matrix: 'satisfaction variables'	292
11.12	'Promax' rotated factor structure: 'performance variables'	296

TABLE		PAGE
11.13	Summary of factor analysis procedures: independent variables	299
11.14	Summary of factor analysis procedures: personality moderator variables	300
11.15	Summary of factor analysis procedures: managerial control system moderator variables	301
11.16	Summary of factor analysis procedures: managerial commitment moderator variables	302
11.17	Summary of factor analysis procedures: employee attitudinal dependent variables	303
11.18	Summary of factor analysis procedures: employee behavioural dependent variables	304
12.1	Correlations between scores of: job satisfaction and perceived extent of financial participation	311
12.2	Correlations between scores of: job satisfaction and perceived extent of participation in general work-related decision-making	312
12.3	Correlations between scores of: job satisfaction and perceived extent of participation in work target setting and perceived extent of participation in safety-related decision-making	313
12.4	Correlations between scores of: job satisfaction and employee self-rated performance and employee supervisor-rated performance	314
12.5	Correlations between scores of: job satisfaction and propensity to remain	316
12.6	Moderating effects: 'personality variables'	321
12.7	Moderating effects: 'managerial control system variables'	323
12.8	Moderating effects: 'managerial commitment variable'	324
12.9(a)	Moderating effects: by work-level. Moderators: personality variables	328
12.9(b)	Moderating effects: by work-level. Moderators: managerial control system variables	329

TABLE		PAGE
12.9(c)	Moderating effects: by work-level. Moderator: managerial commitment	330
12.9(d)	Summary of moderating effects: by work-level	331
12.10(a)	Moderating effects: by work-site. Moderators: personality variables	334
12.10(b)	Moderating effects: by work-site. Moderators: managerial control system variables	335
12.10(c)	Moderating effects: by work-site. Moderator: managerial commitment	336
12.10(d)	Summary of moderation effects: by work-site	337
12.11	Summary of moderating effects: longitudinal comparisons	339
13.1	Backward elimination multiple regression: satisfaction with financial participation	345
13.2	Backward elimination multiple regression: satisfaction with participation in work-related decision-making	347
13.3	Backward elimination multiple regression: organisational commitment	350
13.4	Backward elimination multiple regression: job satisfaction	352
13.5	Backward elimination multiple regression: employees' propensity to remain (in current employment)	354
13.6	Backward elimination multiple regression: employees' self-rated performance	356
13.7	Backward elimination multiple regression: employee supervisor-rated performance	358
13.8	Moderating effects: personality variables	363
13.9	Moderating effects: managerial control system variables	364
13.10	Moderating effects: managerial commitment variable	365
13.11	Path model: structural equations	369
13.12	Results: White's heteroscedasticity test	379
13.13	Path analysis structural equations: whole sample (first survey)	380
13.14	Path analysis structural equations: whole sample (second survey)	382

TABLE		PAGE
13.15	Path analysis test results: whole sample (1st and 2nd surveys) Summary: explanatory power of structural equations	384
13.16	Path analysis structural equations: management stratum (first survey)	386
13.17	Path analysis structural equations: management stratum (second survey)	388
13.18	Path analysis test results: management stratum (1st and 2nd surveys). Summary: explanatory power of structural equations	390
13.19	Path analysis structural equations: supervisors and artisans ('category A') stratum (first survey) . .	391
13.20	Path analysis structural equations: supervisors and artisans ('category A') stratum (second survey) . .	393
13.21	Path analysis test results: supervisors and artisans ('category A') stratum (1st and 2nd surveys). Summary: explanatory power of structural equations	395
13.22	Path analysis structural equations: unskilled and semi-skilled ('category B') stratum (first survey)	397
13.23	Path analysis structural equations: unskilled and semi-skilled ('category B') stratum (second survey)	399
13.24	Path analysis test results: semi-skilled and unskilled ('category B') stratum (1st and 2nd surveys). Summary: explanatory power of structural equations	401
14.1	'Open-ended' questionnaire responses to the item: 'Things that I think are good about the bonus scheme'	405
14.2	'Open-ended' questionnaire responses to the item: 'Things that I think are bad about the bonus scheme'	408
14.3	'Open-ended' questionnaire responses to the item: 'Things that I think are good about the (decision-making) participation schemes'	411
14.4	'Open-ended' questionnaire responses to the item: 'Things that I think are bad about the (decision-making) participation schemes'	414

TABLE **PAGE**

15.1 Summary of 'main effects' and 'moderating effects' (first survey). Independent variable: perceived extent of financial participation; dependent variable: job satisfaction 435

15.2 Summary of 'main effects' and 'moderating effects' (first survey). Independent variable: perceived extent of participation in general work-related decision-making; dependent variable: job satisfaction 436

LIST OF FIGURES

FIGURE		PAGE
2.1	Continuum of worker participation in control	16
3.1	Herzberg's two-factor theory	48
3.2	Porter and Lawler's model of motivation	54
3.3	A model of the effect of participation in standard-setting	78
5.1	The roles of worker participation and productivity bonuses in gainsharing programmes	117
6.1	A conceptual model of job attitudes	132
6.2	The employee turnover decision process	134
7.1	A role and expectancy perceptions model of employee participation	147
8.1	A model of integrated employee participation (incorporating moderating effects)	169
13.1	A path model of integrated employee participation	368
13.2	Path analysis results: whole sample (first survey)	381
13.3	Path analysis results: whole sample (second survey)	383
13.4	Path analysis results: management stratum (first survey)	387
13.5	Path analysis results: management stratum (second survey)	389
13.6	Path analysis results: supervisors & artisans stratum (first survey)	392
13.7	Path analysis results: supervisors & artisans stratum (second survey)	394
13.8	Path analysis results: unskilled & semi-skilled stratum (first survey)	398
13.9	Path analysis results: unskilled & semi-skilled stratum (second survey)	400
15.1	Revised path model (whole sample)	441
15.2	Revised path model (management stratum)	443
15.3	Revised path model (supervisors and artisans stratum)	446
15.4	Revised path model (unskilled and semi-skilled stratum)	448

CHAPTER 1

INTRODUCTION

1.1 THE NEED FOR THE STUDY

This study is concerned with the implementation, effects and dynamics of 'integrated' employee participation schemes, where workers participate in both the profits of their employer, and in work-related decision-making.

Such combinations of 'participatory management' initiatives are practised within the South African gold-mining industry, where negotiated or management-imposed profit-sharing and / or cost-containment bonus schemes have been introduced on certain mines. Also, participation in decision-making has been steadily introduced, in various forms, across the industry in recent years.

Cordova (1982) suggested that while employee financial-participation schemes had often have been conceived in times of economic growth for purposes of wealth creation, they were steeled in times of recession when tougher questions of co-operative endeavour for purposes of organisational survival and job security had to be addressed. This comment is particularly relevant to the South African mining industry in the 1990s, which has been characterised by weak commodity prices and escalating working costs. The resulting pressure on profits has turned previously-profitable mines into marginal or loss-making operations, thus threatening their future existence and the job security of their employees. In December 1992, the Chamber of Mines negotiated, with relevant trades union, a profit-sharing scheme for certain of its members' mines. The profit-shares payable in terms thereof replaced fixed annual increases in basic wage-rates, but were only payable above pre-set levels of profitability and / or if the gold-price (in South African rands) was maintained above certain levels. These targets varied from mine to mine.

Thus mine-survival and employment levels were intended by both

management and trades union to be somewhat protected by these schemes, which were renewed, after protracted negotiations, in 1993 and 1994.

Simultaneously with the introduction of incentive pay schemes, the industry has implemented various other forms of participatory management. These are designed to involve workers in decision-making relating to aspects of their jobs, including work practices, health and safety, and productivity. The programmes include works councils, suggestion schemes, green areas and health and safety committees. No consistency exists across the industry, however, in respect of either the form or extent of employee decision-making involvement offered to employees. Together with the various forms and extents of financial participation provided, there are thus many potential permutations of 'integrated participation schemes' in the industry.

This variety of involvement-scheme characteristics is also reflected in the literature, in which many types of participatory systems, an assortment of research designs, and contextual differences are found. Not unsurprisingly, there has been a lack of consistency in the results of empirical studies linking participation with employee attitudes and work-related behaviour. Such studies are therefore difficult to integrate.

The specific effects and dynamics of 'integrated employee participation schemes', as practised within the South African gold-mining industry, thus awaited empirical exploration and testing. Support for hypothesised positive relationships between the introduction of such programmes and improved employee attitudes, performance and stability would be useful to compensation strategists, corporate planners and mine management. Further, the identification of factors, both within and outside of management's control, that might enhance such relationships would be of assistance in the effective design and implementation of employee involvement programmes.

There was thus a need to build on the extant literature, and to develop an empirically testable model that detailed the characteristics of 'integrated' employee participation in both profits and decision-making. Such a model needed to describe the processes through which such combinations of participation operated, leading to a specific set of hypothesised employee attitudinal and behavioural outcomes. It also needed to specify factors that might enhance or moderate the effects of 'integrated' participation programmes. The model then required empirical testing to evaluate its explanatory utility. It was to these needs that the 'explanatory' section of this research study was addressed.

The literature contains a number of different explanatory models of how employee participation has been postulated to affect job-related attitudes and performance. These can be categorised, broadly, into 'cognitive', 'contingency' and 'affective' models (Miller and Monge, 1986). Each category of models emphasises a different explanatory mechanism by which worker involvement has been proposed to enhance job satisfaction and work-place behaviour. A detailed study of 'integrated' participation schemes needed to identify which of these explanatory mechanisms were plausible in the case of the South African gold-mining industry. Thus the dynamics of the involvement programmes, in terms of the interrelationships between participation, employee attitudes and performance, and various organisational factors (e.g. aspects of the firm's managerial system of communication and control) needed to be investigated. Also, empirical support for the causal direction of such relationships would be useful. It was to these needs that the 'exploratory' section of this research study was addressed.

1.2 THE AIMS AND PURPOSES OF THE STUDY

The aims of this study were as follows:

- firstly, based on the theoretical propositions and empirical research results from the literature, to develop a model of 'Integrated Employee Participation' (including moderating effects). This model would

articulate a set of conditions through which such 'integrated' participation schemes might lead to enhanced employee work-related attitudes and performance, and would propose various factors that might moderate those effects;

- secondly, to test specific hypotheses concerning the direct and moderating relationships proposed within the model, to evaluate its explanatory power. Such tests would be performed longitudinally, i.e. on two separate occasions, approximately 10 months apart. The purpose of these repeated tests was to achieve an added level of support for the research findings, and to explore for the effects of 'integrated participation schemes' over time;
- thirdly, based on the hypothesis-testing results, and using exploratory regression analyses, to develop a further causal path model of 'integrated employee participation'. The purpose of this 'exploratory' part of the research was to seek an improved theoretical model, explicating the dynamic interrelationships between employee participation, attitudinal and performance variables, and individual and organisational factors; and
- finally, using path analytic techniques, to test this path model longitudinally, on different levels of the organisational hierarchy. The purpose of this section was to evaluate the path model's ability to predict the effects of 'integrated participation' programmes for employees at different organisational levels, and to seek support for the postulated causal directions of the relationships within the path model.

A major aim of the study was to explore for the 'how' of 'integrated participation's' effects, in addition to the 'what'. That is, having established the effects of 'integrated participation' schemes, in terms of their impact on employee attitudes and work-related behaviours, the research emphasis was on how such effects were achieved, and on the search for factors that moderated and / or enhanced those effects.

The study hoped to make contributions to this field of study

in the following respects:

- firstly, based on a thorough literature review, to propose a new model, suitable for empirical testing, of the effects and dynamics of 'integrated employee participation'. This model would incorporate various individual and organisational factors postulated to moderate the effects of such schemes;
- secondly, to test major elements of the model within the South African gold-mining industry. Such a study had not previously been performed within this industry;
- thirdly, to conduct such tests longitudinally, to provide added support for the research findings, and to explore for the effects of participatory management initiatives over time;
- fourthly, to test for the moderating impact on the effects of participation initiatives, of factors not previously considered in this context. Specifically, the potential moderating role of aspects of the organisation's managerial system of communication and control would be evaluated; and
- finally, to develop, and subsequently test, at different levels of the organisational hierarchy, a further causal path model of 'integrated' participation. In so doing, support would be sought for distinct categories of explanatory models of the effects of participation, as described within the literature. Also, as previously discussed, support would be sought for the postulated causal direction of relationships within the path model.

1.3 THE SCOPE AND LIMITATIONS OF THE STUDY

The determination of the scope and limitations of the study were influenced by the lack of previous research in this area, and by the theoretical complexity of the topic. Further, a substantial proportion of the study would be exploratory in nature. Consequently, it was necessary to delimit the scope of the research as follows:

- the content was limited to the study of the effects of 'integrated' participation schemes on employee work-related attitudes and their performance. No attempt was

made to establish relationships between different participation structures and enhanced organisational-level performance and / or profitability. This decision was taken due to the desire to focus on the dynamics of participation programmes, in terms of the interrelationships between participation and employee attitudinal and performance variables;

- the focus of the study was limited to the South African gold-mining industry, and within that limitation it was decided to undertake the research on a single organisation. This decision was taken due to the desire to undertake an in-depth exploration of the dynamics of 'integrated employee participation', in an actual industrial setting.

It is acknowledged that these limitations may have affected the generalisability of the research findings. Nevertheless, the study aimed to make significant contributions by identifying the effects of, and exploring the dynamics of, employee involvement initiatives within a major South African industry.

1.4 THE PLAN OF THE THESIS

The thesis is divided into three themes: the theoretical, methodological, and empirical.

Theme 1 is the 'theoretical' theme. It comprises chapters 2 to 8. The aims of this theme were to review the burgeoning literature on employee involvement, and to integrate the findings into a model that proposed one set of circumstances under which financial- and decision-making participation programmes, when operated simultaneously, would lead to desired employee responses. Chapter 2 presents an overview of the literature on participative management, and highlights the many variates of employee involvement operated around the world. The debate as to whether or not participative management 'works' is introduced, as are three categories of explanatory models of the effects of participation. Chapters 3 and 4 review, in detail, the literature on the effects of

decisional and financial participation. Chapter 5 discusses theoretical propositions and reported empirical findings relating to 'integrated participation programmes', such as Scanlon and E.S.O.P. plans. Chapter 6 briefly reviews the literature on the relationship between employees' attitudes and their work-related behaviour, and chapter 7 evaluates propositions and research findings in respect of factors that might moderate the effects of employee participation schemes. Chapter 8 describes the development, based on the prior literature review, of a 'Model of Integrated Employee Participation (including moderating effects)'.

Theme 2 is the 'methodological' theme. It comprises chapters 9 and 10. The first aim of this theme was to present the research problem, the subproblems, and the specific hypotheses of the study. This is done in chapter 9, which also presents the rationale behind each hypothesis. Chapter 10 addresses the second aim of this theme, which was to present a detailed review of the research design and the research methods used in the study.

Theme 3 is the 'empirical' theme. It comprises chapters 11 to 14. The aim of this theme was to report and briefly interpret the research findings. Chapter 11 reports on the tests undertaken to assess the reliability and validity of the study's questionnaire instruments. Chapter 12 reports the statistical and explanatory hypothesis-testing results. These are briefly interpreted, in sufficient detail to clarify their meaning. Chapter 13 describes the exploratory research procedures and findings. These include exploratory regression analyses, and the development and testing of a path model of 'integrated employee participation'. Chapter 14 reports and evaluates the 'qualitative' research findings, which were drawn from responses to 'open-ended' items in the research questionnaire.

Chapter 15 concludes the thesis with an in-depth evaluation of the research findings. It includes a discussion of the implications of the findings for current theories of employee

participation, and for future theory-building and research. Finally, recommendations are made for the practical implementation and management of 'integrated participation' programmes.

THEME 1: THEORETICAL

The essential aims of this theme are to review the extant literature on employee participation programmes, and to integrate the findings thereof in describing a 'Model of Integrated Employee Participation (including moderating effects)'. The theme therefore comprises two sections:

- section 1 comprises chapters 2 to 7. These chapters will review both the theoretical commentaries and hypothesis-testing research reports within the literature, relating to this topic; and
- section 2 comprises chapter 8. This chapter will describe the development, based on the aforegoing literature review, of the 'Model of Integrated Employee Participation (including moderating effects)'.

Many of the theoretical propositions within the model, to be described in chapter 8, guided the formulation of the research problem, the hypotheses, and the research design of this study.

CHAPTER 2

AN OVERVIEW OF PARTICIPATIVE MANAGEMENT

2.1 INTRODUCTION

The main objective of this chapter is to provide an overview of the concept of 'participative management'. By so doing, it is intended to lay the foundations for an in-depth review of the effects of various forms of decision-making participation and financial participation, to be presented in the two subsequent chapters. This overview of participative management will be achieved through five sub-objectives:

- by reviewing the major definitions of participative management;
- by reviewing three conceptual frameworks for participation as contained within the extant literature;
- by reviewing the major variates of participative management, both overseas and in South Africa;
- by introducing a major controversy about this topic, i.e. does participative management 'work'?; and
- by reviewing three major categories of explanatory models of the influence of participation on employee job satisfaction and productivity.

Throughout this chapter, emphasis will be placed on the diversity of approaches to employee participation, both in terms of theoretical propositions and the reported mechanics and effects of schemes in practice.

The contents of the chapter are arranged in the sequence of the above sub-objectives. Having provided an overview of the general topic of employee participation, the following chapter will review, in greater depth, prior research on the effects of decision-making participation by employees. This will be followed by a survey of the literature on the impact of financial participation schemes, in their various forms, in chapter 4.

2.2 DEFINING PARTICIPATIVE MANAGEMENT

The concept of worker 'participation' does not have a universally accepted meaning. Salamon (1987) identified three quite different interpretations in practice:

- as a socio-political concept or philosophy of industrial organisation;
- as a generic term to encompass all processes and institutions of employee influence; and
- as a term denoting a phase in the evolutionary development of traditional joint regulation process.

He suggested the following definition of employee participation:

> 'A philosophy or style of organisational management which recognises both the need and the right of employees, individually or collectively, to be involved with management in areas of the organisation's decision-making beyond that normally covered by collective bargaining' (1987, p 296).

This definition placed participation clearly as a complementary extension to traditional adversarial collective bargaining, but referred only to the decision-making variants of employee involvement. It appeared to ignore financial types of participation, which can be categorised as a completely separate sub-section. Indeed, Marchington et al (1992) suggested that definitions of participation should incorporate the forms of involvement (whether direct, indirect or financial), as well as the degree of employee involvement, the level in the organisational hierarchy at which involvement takes place, and the range of the subject matter being considered in the involvement scheme. They categorised definitions of employee participation into three types:

- those that referred to employees taking part or having a say in decision-making, with no attempt to quantify their impact on the process;
- those that referred to participation as concerned with the extent to which employees might influence managerial actions; and

- those that linked together participation and the control over decision-making.

This categorisation reflected the three elements identified by Wall and Lischerson (1977) as being central pillars of the concept of worker participation: influence, interaction and information sharing. Various forms of involvement contain greater or lesser degrees of each element. Employee suggestion schemes, for instance, may be high on interaction but low on influence and information sharing. Employee reports on the other hand may be high on information sharing but low in respect of interaction and influence.

Bendix (1989) defined participation as:

> '... the involvement of the employee in the organisation and planning of the work process, in the establishment of procedures and future processes, in the decision-making function at various levels and in the management and policy-making bodies of the undertaking' (p 115).

This South African author's definition also omitted any reference to financial types of participation, which could be a reflection of the low priority given to such schemes in this country until recently.

Such confusion as to the exact use of the term 'participation' has also been noted by commentators within the literature (e.g. James and Horwitz, 1992; Wall and Lischerson, 1977). Beardwell and Holden (1994) noted that an all-encompassing definition was problematic, due to the enormous range of involvement schemes, varying from mere information-disseminating mechanisms to complete corporate democracy, where employees shared in decision-making and the financial fortunes of the employer to the same extent as management. Nevertheless it would be appropriate to define 'integrated participation' for the purposes of this study.

The following is proposed:

> 'The sharing by all employees of an organisation in both decision-making relating to their own work, and in the financial performance of the firm.'

This definition is intentionally broad in its scope. This is because the study examined the perceptions of employees to all types of decisional and financial participation in existence at the subject mine. In addition, the study was conducted at all levels of the organisational hierarchy, between which the nature of the various participation programmes may well have differed.

2.3 CONCEPTUAL FRAMEWORKS FOR PARTICIPATIVE MANAGEMENT

A number of authors have proposed theoretical frameworks within which employee participation might be studied. Such frameworks have been developed to assist in the evaluation of the implementation and outcomes of participation schemes, in the context of the organisational and macro-economic environments pertaining at the time. This section reviews the major elements of such frameworks, by referring to three examples in the literature.

2.3.1 JAIN'S FRAMEWORK FOR INDUSTRIAL RELATIONS AND PARTICIPATIVE PROCESSES

Jain (1980) stated that worker participation in any particular country needed to be seen within the context of its industrial relations system. He proposed a conceptual framework for industrial relations and participative processes. This framework is reproduced in table 2.1. The framework recognised the key actors in an industrial relations system, namely the workers, their organisations, management and government. All of these actors operated within an environment comprising external, internal and behavioural forces. As proposed by the framework, the successful functioning of participative processes would be dependent upon the goals, values and powers of the actors, and upon their perceptions of their roles within the organisation and in respect of each other. Further, the actors' perceptions of environmental forces, which might

Table 2.1 Industrial Relations System and Participative Processes: A Conceptual Framework

Actors	I.R. System: Goals, Values, and Power	I.R. System: Environmental Influences	Functioning of Participative Processes
1. Workers and their organisations (informal and formal) 2. Management 3. Government	Goals: Objectives of the actors Values: Norms and standards that an actor observes in accomplishing his objectives Power: Ability of an actor to satisfy his needs or goals despite the resistance of others	External Economic; political; social and legal Internal Structural; Organisational structure; size of the enterprise; technology. Forms and content of participation. Behavioural: Actor's perception of the work situation; organisational climate; managers and supervisors autonomy; leadership styles and expectations; interpersonal and intergroup interactions.	Dependent upon: 1. Goals, values and power of the actors in the I.R. system and perception of their role within the framework of organisational networks and vis-a-vis each other 2. Their understanding of the environmental influences. 3. Relationship among various forms of participation and their integration at all levels of the enterprise.

Source: Jain (1980) p 7

have tended to inhibit or encourage them to develop appropriate goals and attitudes necessary for the participation schemes to operate as desired would be key determinants of the success or otherwise of the schemes. Finally, the relationships between the various forms of participation within the enterprise, and how well they were integrated at the different levels of the organisation's hierarchy, would have a substantial impact on the effects of the combined schemes.

This model highlighted the importance of the individual perceptions of each worker about a particular participation scheme, and of the ideology, goals and values of each 'actor' in the framework. Such ideology in particular, Jain suggested (1980, p 8), would have a profound impact on his or her social behaviour, and thus on the resultant operation of the participation scheme in the organisation.

2.3.2 JONES AND MAREE'S CONTINUUM OF WORKER PARTICIPATION IN CONTROL

Jones and Maree (1989) proposed a continuum of worker participation in control, to reflect the extent to which workers had power to influence or control decisions in their employer organisation. This model is reproduced in figure 2.1. James and Horwitz (1992, p 7), commenting on this continuum, acknowledged however that there was no universal agreement as to the classification of various forms of participation. Nevertheless, this concept of a range of participation forms has been supported by other researchers, including Coldwell (1992) and Nel (1984).

A major principle of this framework, that participation was essentially a measurable construct, the degree of which could be measured on a continuum, has significant implications for researchers. Firstly, it implies that comparative studies may be undertaken, ranking the participative extent of differing schemes of involvement. Secondly, it suggests that correlational studies are possible, which may relate the degree of employee participation with measured attitudinal and

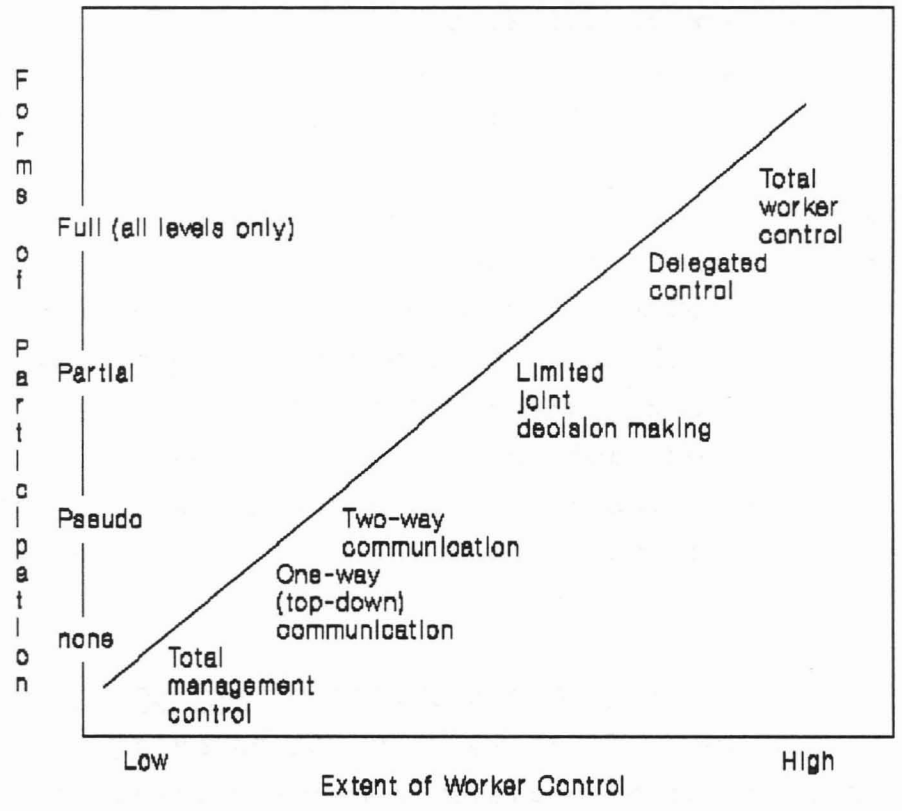

Figure 2.1: Continuum of Worker Participation In Control

Source: James and Horwitz (1992) p 7

productivity outcomes. A caveat is appropriate however: Beardwell and Holden (1994, p 565) noted that the degree of participation within a particular scheme-type may in fact differ from one firm to another. Thus joint consultative committees, for instance, may vary in power from being bodies merely rubber-stamping managerial decisions, to enjoying genuine input in the organisation's decision-making processes.

2.3.3 BROWNELL'S FRAMEWORK OF PARTICIPATIVE BUDGETING

Brownell (1982) developed a framework of participative budgeting that divided the literature into two parts. The first part specified conditions antecedent to a demand for participation, such as environmental uncertainty and organisational variables. The second part concentrated on the consequences of participation such as increased employee motivation, satisfaction, and performance. He concluded his

study by stating that the research to date had tended to focus attention on the more general question of whether participation was effective or not, rather than specifying the conditions under which it was effective.

Thus Brownell's (1982) framework, in common with that of Jain (1980), suggested that a wide range of organisational and environmental variables may combine to affect the outcome of employee participation schemes. This study will address this issue in the context of the South African gold mining industry, by, inter alia, exploring for the direct and moderating effects of a number of variables on the hypothesised effects of participation schemes within the industry.

2.4 VARIATES OF PARTICIPATIVE MANAGEMENT

This section presents an overview of the enormous range of worker participation schemes referred to in the literature. It firstly reviews the various forms of pure decision-making participation, and then presents a review of variates of financial participation. A review of schemes which combine elements of participation by employees in both decision-making and the financial performance of their employer-organisation then follows.

Salamon (1987) suggested the differentiation of the following elements to assist in the understanding of the various forms of employee participation:

- the method or extent of participation: ranging from direct involvement in work-related decision-making to indirect forms such as via elected representatives or financial participation;
- the level in the organisation: ranging from the lowest work station to board level; and
- the scope of participation: ranging from a task-centred orientation (typically at lower levels in the organisational hierarchy) to power-centred (influencing the very framework within which organisational decisions have to be made).

Beardwell and Holden (1994, p 565) pointed out, however, that it was not always feasible to 'compartmentalise' a particular participation form according to such criteria. They noted that some forms of employee involvement, particularly financial participation, may pervade all or many levels of the organisation.

2.4.1 VARIATES OF DECISION-MAKING PARTICIPATION

Marchington et al (1992) categorised employee participation schemes into four groups, one of which referred exclusively to financial participation (see section 2.4.2, below), and the following three which related to decision-making variates:

- downward communications, also referred to as 'top-down' in nature, being from management to other employees. Included in this category would be employee reports, company newsletters, and briefing sessions;
- upwards problem solving forms, such as suggestion schemes, quality circles and total quality management programmes. Such schemes are aimed at utilising employees' knowledge and opinions in addressing organisational issues; and
- representative participation, under which employees' interests are represented on bodies such as advisory councils, work councils, and in collective bargaining procedures.

Beardwell and Holden (1984) presented a table of types and levels of employee involvement in decision-making, which is reproduced here in table 2.2. This table was not exhaustive, but usefully reflected how participation schemes might be 'plotted', in terms of their type and level, on such a matrix. As many organisations may in fact combine a number of participation schemes, supporting and complementing each other, it may thus be possible to graphically represent a firm's 'portfolio' of involvement schemes on such a chart. Such an analysis could assist in the evaluation of the overall extent of participation existing in a particular organisation.

Table 2.2 Some Types and Levels of Employee Involvement

Type	Levels of involvement		
	Local*	Local and distant	Distant**
Control (by workers or workers and management together)	Worker self-management		Worker self-management or cooperatives
Co-determinational (two-way communication)	Union shop steward representation		Joint Consultative Committees Works councils Worker directors Union-management negotiations
Consultational	Quality circles Job enrichment Suggestion scheme Appraisal	Attitude survey Customer care Total Quality Management	
Communicational	Team briefings Department or group meeting	Mass meetings	Mass organisational meetings
Informational (top down)	Notice boards	Memos Briefs	Company newspaper Bulletin

* Work place level ** Company or organisational level Source: Beardwell & Holden, p 565

2.4.2 VARIATES OF FINANCIAL PARTICIPATION

Marchington et al's (1992) fourth category of employee involvement related to financial participation schemes, which were designed to link the remuneration of individual employees to the performance of their work units or the organisation as a whole. Programmes here included piece work systems, profit sharing, employee share ownership plans and performance-linked bonus arrangements. Jenkins and Gupta (1982) divided such financial incentive systems, from an American perspective, into two principle subgroups - traditional and innovative. 'Traditional' systems, most of which have been used since the early 1900s, were deemed to include piece-rate systems, merit pay increases, suggestion bonuses and group bonuses. 'Innovative' financial incentive systems, such as quality improvement, fringe benefit, attendance and skill-based plans were all identified as using novel financial incentives to reward employee behaviour. Jenkins and Gupta (1982) noted that shortcomings of all such programmes included exclusive reliance on one employee behaviour (e.g. suggestions) as the reward criterion, as well as problems experienced by management in setting appropriate standards and accurately measuring performance. This latter problem has also been identified by writers such as Flanders (1970) and Grayson (1984), both of whom have commented that modern developments in manufacturing technology have resulted in individual effort and contribution by the shopfloor worker becoming less easily identifiable. Systematic rewarding of such improved employee performance is thus becoming problematic.

2.4.3 COMBINING DECISION-MAKING PARTICIPATION AND FINANCIAL PARTICIPATION

This study explored the effects of 'integrated' participation schemes in the South African gold-mining industry, in a case where financial and decision-making participation programmes were operated simultaneously. It is thus appropriate to include in this chapter a review of the theory and reported research on similar integrated cases of participation in practice.

The most well-known and well-documented management strategy for combining participation in decision-making and financial gains in an organisation is gainsharing, which Doyle described as:

> '.. a single program with three principal elements ... better management, ... employee participation,.. (and) improving the reward system' (1983, p 58).

Gainsharing should thus be regarded as a general management philosophy rather than a particular type of participation. The fundamental principles under-pinning the concept are the necessity for co-operation between workers and owners of an enterprise, the true relationship between the parties being one of mutual benefit, and the division of the financial gains arising from such co-operation being divided between the employees and shareholders on a pre-agreed formula. Doyle (1983, p 59) emphasised management's role in this process, which involved the setting of strategic objectives and plans for the organisation, the securing of resources to enable achievement of the objectives, and the establishment of effective systems of communication to inform, encourage, and sustain employee involvement.

Gainsharing begins with the premise that managers and workers are partners in an enterprise. It emphasises a collaborative type of management, depending on effective communications. Higher levels of performance are postulated as occurring directly as a result of employee participation and the expectation of a financial reward for improved effort.

Scanlon plans, Rucker plans, and Improshare plans are all specific versions of gainsharing. Scanlon plans typically incorporate: a management philosophy which emphasises teamwork, involvement and equity; an employee suggestion-committee approach to decision-making participation; and an allocation of measured savings in the proportion of 75 per cent to the workers and 25 per cent to the company, when labour costs alone are used as the productivity measure. When multiple bases are used to measure achieved gains, firms

implementing Scanlon plans will typically pay up to 50 per cent of such amounts to their employees (Doyle, 1983 p 69).

Rucker Plans commonly use a single suggestion committee structure, pay 100 percent of any labour savings achieved to the workers, and a lower but 'equitable' percentage of gains from other cost categories. They tend not to formally emphasise management's role in the gainsharing programme to the same extent as Scanlon Plans (Doyle, 1983 p 60).

Improshare Plans provide no formal decision-making participation structure, but supervisors and managers are encouraged to consider and act on any suggestions from workers that have merit. Under these programmes, half of any labour cost-savings are distributed to the workforce (Doyle, 1983 p 69).

Although profit-sharing schemes have been referred to as gainsharing programmes by various authors (e.g. Doyle, 1983; Takeuchi, 1981), such plans do not in fact include any specific provision for employee participation in work-related decision-making. Other than the fact that, by definition, profit-sharing plans do indeed share financial gains between a company's workers and its shareholders, its inclusion within the 'gainsharing' category, as defined by Doyle (1983), is thus questionable.

2.5 INTERNATIONAL TRENDS IN PARTICIPATIVE MANAGEMENT

This section reviews the development of worker participation programmes internationally, and describes in outline a number of country-specific variations that have arisen. European trends are reviewed first, followed by American and Japanese developments. Finally, a survey of reported participation schemes in South Africa is presented.

As discussed by Anstey (1990), the development of workers' participation internationally has not been a systematic one, but has rather been characterised by a diversity of drives and initiatives across nations. These have ranged from socialistic

systems of worker self-management such as evidenced in Yugoslavia, Spain and Scandinavia to the more capitalistic drives in the United Kingdom, the United States and Japan. Indeed, Marchington et al (1992) identified 'waves' of employee participation within organisations, which were reactions to external events and trends in the countries concerned. Such environmental disturbances would, they suggested, lead organisations to institute new participation schemes or to revamp their existing ones.

2.5.1 EUROPEAN TRENDS

Employee participation in its various forms has long been an element of business and industry in many European countries. The post-war period saw the establishment of works councils and worker representation on boards of management in the coal and steel industries in Germany. France has also taken a leading role in promoting employee participation schemes and privatisation (Cowley, 1992 p 106). In addition to the promulgation of various laws supporting works councils and other employee rights to participation by individual member states, the European Community (latterly the European Union) has further supported the concept by issuing proposals on participation structures. The Fifth Directive, 1972, aimed at harmonising company law provisions across the community. The Vredeling Directive of 1980 proposed compulsory employee consultation and information systems for companies and groups with more than 1,000 employees. The Social Charter of the Community incorporated most of these provisions, but the adoption of the 1989 version thereof by member states allowed for the principle of 'subsidiarity' to replace compulsory adoption of the terms of the Charter. Thus each country within the Union is permitted to interpret the rulings in their own way. Beardwell and Holden (1994) commented that European Union directives were controversial and took a long time to be implemented by member states. Nevertheless, they noted that employee participation schemes grew faster during the 1970s and 1980s in those countries which had legislated supporting systems, such as co-determination in Germany and Sweden. Lane (1989) noted however that there had been only a slight shift

of organisational control from management to workers in Europe, even in countries where employee involvement legislation had been promulgated. Nevertheless, the literature emphasises that the nature and extent of the movement towards workplace democracy has varied from country to country within Europe. The major identified variants within the continent will be discussed in the following sub-sections.

2.5.1.1 Germany

Beardwell and Holden (1994) commented that the German system of co-determination and works councils has been viewed by many observers as a model for the rest of the European Union (Beardwell and Holden, 1994 p 575). There are three methods via which German employees can participate in work-related decision-making: in works councils, on supervisory boards and on management boards.

German businesses employing five or more employees are obliged to establish works councils, elected by the workforce and consisting only of workers' representatives. Trades union in Germany have a powerful say on the composition of such workers' councils ('betriebsratte'), which are the main instrument of employee representation at factory-floor level. Works councils have legal rights of participation in decision-making in areas such as manpower planning, dismissals, work procedures and the employer's financial situation.

Robinson stated, in reference to the system of 'betriebsratte' in Germany, that:

> '.. the works council and the employer seldom seem to get into irreconcilable confrontation and do in fact seek out - in the spirit of the labour relations system - suitable compromises.' (in Anstey, 1990 p 51)

The West German Works Constitution Act, 1952, introduced a further system of worker participation whereby companies having 500 or more employees operate on a two-tier system of

management. Under this system, overall control is exercised by a supervisory board of directors which appoints a second board to manage the day to day affairs of the company. At least one third of the members of the advisory board are elected employee representatives (International Labour Organisation, 1981 p 87).

The composition of supervisory boards, particularly in the German mining, iron and steel industries, has been noted to be particularly democratic. Robinson (in Anstey, 1990) stated that such boards typically comprised equal numbers of representatives from 'capital owners' and from 'workers'. Casting votes would be made by a 'neutral member' on each board.

Worker participation in Germany is thus characterised by a dominance of legalism in the labour-management relationship (Robinson, B. in Anstey, 1990). Other legislation that determines the degree of employee participation in Germany includes:

- the Works Constitution Act of 1972 - dealing with participation by shop-floor level employees; and
- the Co-determination Act of 1976 - dealing with enterprise-level participation.

2.5.1.2 The United Kingdom

The highly legislated participation system of Germany stands in stark contrast to the systems of the rest of the European Union, the United States and Japan. In the United Kingdom, employee participation is often achieved via the worker co-operative, the number of which had grown twentyfold during the 1980s. However, the co-operative sector in Britain is relatively small in number, with member firms themselves often comprising less than ten worker-members (Welford, R. in Jenkins and Poole, 1990).

The degree and nature of participation in other United Kingdom organisations is typically left to management and unions to negotiate. The British government's main contribution in this

area has been to encourage the financial participation by employees in their employers' affairs via either 'approved' profit-sharing or share-ownership schemes, both of which qualify for favourable tax treatment. According to Hanson and Watson (in Jenkins and Poole, 1990 p 165):

> '.. the main justification put forward by the United Kingdom government in 1978 for introducing these across-the-board tax concessions was what has recently been termed the 'morale and productivity argument' ... In essence it was presumed that profit-sharing will help to improve efficiency and productivity and, therefore, the effectiveness of the corporate sector as a whole.'

The principle legislation in the United Kingdom encouraging employee share-ownership schemes are the Finance Acts of 1978 and 1980. The 1978 Act provides tax relief for employees who participate in approved deferred share trust profit-sharing schemes. The 1980 Act provides similar tax relief for employees falling within 'Save As You Earn' share option schemes. Further government assistance for employee financial participation was contained in the 1984 Finance Act, which provided for tax relief for executive share option schemes. The 1987 and 1989 Finance Acts introduced tax incentives for all-employee cash-based profit-related pay schemes.

The British Conservative government is however implacably opposed to the directives on decision-making participation embodied in the Social Charter, and to the Works Council Directive, 1991, of the European Union. This position derives from that government's conservative political ideology (Beardwell and Holden, 1994). Thus most participation initiatives in the United Kingdom over the past 15 years have been primarily concerned only with aspects of financial involvement.

2.5.1.3 Other European States

Sweden is often characterised as having one of the most sophisticated and advanced systems of worker participation (Cowley, 1992; Wilczynski, 1983). Since the establishment of

the National Labour Market board in 1948, the country has consistently pursued policies of extending democracy to the workplace. Legislation introduced to that end includes the Co-determination at Work Act (1977), which requires employers to consult employee representatives on a broad range of topics, including proposed organisational and technological changes, and any planned alterations to operations or working conditions.

Scandinavian financial participation often takes the form of 'wage earner funds' (Cowley, 1992 p 107). These funds are derived from company profits for the purchase of shares on the employees' behalf and are controlled by the recognised union, with the aim of ultimately vesting majority control in the workers.

Beardwell and Holden (1994) commented that although economic conditions in Sweden had deteriorated during the early 1990s, raising unemployment from 1.5 percent in 1990 to 8.5 percent in 1993, the culture of employee involvement appeared to be permanently established. There was thus, they suggested, no reason to suggest that the country would not continue to be cited as an exemplar of worker participation practices.

Jain, Vanachter and Gevers (in Jain, 1980) reported on indirect forms of involvement at four Belgian enterprises, and noted that the participative bodies were mostly consultative in nature. Their effectiveness was thus deemed to be somewhat limited. Hovels and Nas (in Jain, 1980) undertook an empirical study of 90 works councils in the Netherlands, and found that considerable diversity existed as to their forms, functions and effectiveness. Indeed, they observed that lack of decision-making was a major problem in 28 percent of the bodies surveyed, and concluded that in certain circumstances such schemes may have actually hindered, rather than assisted, organisational efficiency.

Douard and Reynaud (in Jain, 1980) reported on a case study of participation in a French tool-making plant. They observed

problems associated with the French system of industrial relations which, they suggested, did not provide for bargaining about working conditions at plant level (Jain, 1980 p 222).

Jain (1980, p 346) noted that each European country had thus developed its own distinctive form of worker participation, with unique components and nuances. Each system of employee involvement had evolved in the context of the individual country's legal, economic and political environment. It would thus be futile to transplant or transfer such institutional or organisational models of participation between countries and cultures. Nevertheless, many aspects of European participation practices can be observed in the United States, and these will be reviewed briefly in the following sub-section.

2.5.2 UNITED STATES' TRENDS

The United States' fiscal authorities have encouraged employee financial participation by offering substantial tax concessions for Employee Share Ownership, or 'E.S.O.P.' schemes. Consequently, there has been a substantial growth in the number of fully- or partly- employee-owned firms in the United States. Pierce et al (1991) reported that the number of companies with employee-ownership plans rose from over 300 in 1974 to over 10,000 in 1984. Changes in legislation pertaining to employee-ownership passed by the Congress in recent years have made employee stock-ownership plans increasingly attractive for many firms. The Employee Retirement Income Security Act of 1974 exempts E.S.O.P.s from limitations placed on other employee benefit plans with respect to the maximum percentage of their assets that might be invested in an employer's securities. Contributions made to a tax-qualified E.S.O.P. trust by the employer-company are fully tax deductible in the company's hands. Further, the Deficit Reduction Act of 1984 allows banks and other commercial lenders to exclude 50 per cent of the interest earned on loans to finance E.S.O.P. trusts from taxable income, and also grants a deduction to the employer-company for any dividends paid in cash to E.S.O.P.s (Chang, 1990).

The employee stock-ownership plan is essentially a deferred employee benefit plan (Rosen et al, 1983). Under such schemes, employees seldom acquire stock themselves: rather a portion of their wages is contributed to a trust fund which then acquires the stock in the organisation, in similar fashion to a pension fund. The stock of the E.S.O.P. trust is allocated to individual employee accounts, this apportionment often being based on employee salary levels. After a specified period of time, employees are 'fully vested', that is they acquire 100 per cent of the rights to their trust shares. When employees leave the company, they receive the vested portion of their trust accounts. They may sell these back to the company at the fair market value.

The ability of E.S.O.P.s to be leveraged with debt, serviceable and repayable with before-tax corporate income, has led to their being used as vehicles for financial or legal purposes, including as takeover defenses (Gordon and Pound, 1989). Probably the best-known United States' company to have utilised an E.S.O.P. as a takeover defense is Polaroid, which undertook a substantial share repurchase programme, linked to an E.S.O.P., in its successful defense of an unfriendly takeover attempt by Shamrock Holdings in 1988. As reported by Bruner and Brownlee (1990), the case became a landmark in United States' corporate takeover litigation.

This tendency to utilise E.S.O.P.s for non-participation purposes has, however, led to widespread criticism of the schemes. This was noted by La Mantia et al (1990), who suggested that without any meaningful employee involvement in running the business, an E.S.O.P. would:

> '.. at best be a non-event with little impact on the company or its performance. At worst, it will be a source of frustration, disillusionment, and unfulfilled promise.' (1990, p 79)

E.S.O.P. schemes are self-evidently a financial form of employee involvement, and are unlikely, per se, to generate any degree of participative decision-making. Indeed,

formalised schemes of involving employees in work-related decision-making are the exception rather than the rule in the United States. This was attributed by the International Labour Organisation (1981, p 150) as being due to the long-standing union and management attitudes to their respective functions. American workers, the Organisation suggested, often tended to view formal systems of co-operation with reservations, fearing that they would result in a lack of union militancy in pressing demands.

2.5.3 JAPANESE TRENDS

Japanese companies' managerial systems have been frequently cited as being a major reason for their relative higher profitability and productivity than, say, those of European or American firms. Ouchi (1981) suggested that this success was due primarily to 'enlightened' systems for managing human resources. Peterson and Sullivan (1983) identified consensual decision-making as a basic feature of the Japanese system. Quality circles, a major type of decision-making participation, emerged in Japan in the early 1960s (Werther, 1983), but were only hailed as innovative management techniques in Europe and America in the early 1980s (Hill, 1991). Beardwell and Holden (1994) acknowledged that much of the attention paid in the United States to the well-being and intrinsic worth of the employee during the 1980s was driven by the relative decline of American economic performance during that decade, particularly in relation to Japan.

Many researchers have attempted to analyse the causes of this relative success (e.g. Lewis, 1989; Ramsey, 1992; Wickens, 1987). Employee involvement in work groups and quality circles has been frequently cited as a distinctive element of Japanese management practice (e.g. Dore and Sako, 1989; Lawler, 1986; Pascale and Athos, 1982). However it is the distinctive Japanese organisational and work cultures that have been frequently used to explain that country's relative economic success. Beardwell and Holden (1994, p 578) suggested that employee involvement, together with an assumption of lifetime employment, combined to ensure that the Japanese worker had a

strong stake in the employer and its success. Briggs (in Brewster and Tyson, 1991) went further, however, and pointed to fundamental cultural factors in explaining Japanese workers' readiness to work longer hours for lower financial rewards than their European or American counterparts. She suggested that the Japanese had a strong sense of duty, which took preference over personal feelings such as job satisfaction (1991, p 41).

Formal participation procedures in Japan are primarily undertaken via consultative works councils, which are also frequently tasked with collective bargaining responsibilities. Trades union have a monopoly on the appointment of workers' representatives on these bodies. The International Labour Organisation (1981, p 153) observed that while some Japanese trades union were not in favour of co-operation through such consultative bodies, surveys had identified a high level of satisfaction with the achievements of the works councils, on the part of both management and employees.

2.5.4 CROSS-NATIONAL STUDIES OF PARTICIPATION

Beardwell and Holden (1994) noted that statistical research comparing employee participation schemes between countries was relatively sparse. Surveys such as the Price Waterhouse Cranfield Survey Report (1991) indicated an increasing desire by employers to improve communication between management and employees in European countries during the 1980s. However such surveys have failed to indicate the extent of participation by employees in organisations. This issue was addressed by Frohlich and Krieger (1990). They examined employee participation in technology change in five European countries, and concluded that while workers were involved in the change process, such participation was unlikely to be at the early, decision making, stages. This suggested that management were reluctant to involve workers in substantial policy-making decisions.

Gill (1993) analysed attitudes to participation schemes in Europe, and discerned a noticeable difference between

attitudes in northern countries (Denmark, Germany, The Netherlands and Belgium), and those in Mediterranean countries (Portugal, Spain, France and Greece). Gill suggested that these differences led to an assortment of styles and levels of participation, with northern countries typically having much greater participation in their workforces than Mediterranean countries.

Boreham (1992), in his investigation into employee control over labour processes in seven countries (Australia, Britain, Canada, Germany, Japan, Sweden and the U.S.A.) concluded that there was little support for the notion that management would cede its decision-making powers to the workforce in the interests of improving production methods.

The preceding review revealed a wide diversity of approaches to the implementation of workplace democracy. Indeed, in a major study of workers' participation schemes around the world, the International Labour Organisation (1981) noted that:

> '... there is virtually no participation system which does not give rise to problems, and it is unanimously agreed that, in this field as in many others, there are no ready made solutions' (p 201).

2.5.5 A SOUTH AFRICAN PERSPECTIVE

The development of worker participation schemes in South Africa needs to be assessed in the light of substantial changes in the relationship between labour and management in the country since the late 1970s. Prior to the reforms of 1979 and 1981 which followed the Wiehahn Commission, industrial democracy was denied to black workers and potential militancy from that quarter was dealt with via acts of suppression rather than negotiation (Anstey, 1990). Since these reforms, a substantial independent trade union movement has arisen,

> '... wary of co-optation by what it perceives as a traditional white state, white labour, white capital alliance and actively committed to wider political liberation.' (Anstey, 1990 p 7)

The 1980s saw a substantial remoulding of the collective bargaining system in South Africa, together with the establishment of new labour rights through the Industrial Court, new wage levels and bargaining at plant, company and enterprise levels. The increased levels of industrial and political actions by labour, together with state and employer reactions such as the introduction of the Labour Relations Amendment Act conspired to create strains in the country's collective bargaining system. Anstey (1990, p 7) commented that the decade witnessed:

> '... an unsteady shift from coercive or paternalistic unitarism toward more constitutional managerial styles. Still it appears that employers have yet to develop the coherence ... to act as a co-ordinated group in the wider society'.

This reported lack of coherence in labour relations policies has certainly extended to the area of worker participation. Varied South African initiatives have included worker co-operatives such as that of S.A.C.T.W.U. (Cormack, G. in Anstey, 1990), Volkswagen South Africa's 'holistic' approach to worker participation (described by Smith, B. in Anstey, 1990), Toyota South Africa's 'Total Worker Involvement' (Dewar, S. in Anstey, 1990) and the well-publicised employee shareholding scheme introduced at Anglo American Corporation's group companies (Fletcher, C. in Anstey, 1990). Also, until a recent profit-sharing agreement between the South African mining trades union and the Chamber of Mines, worker participation schemes in the South African mining industries had only been introduced on a mine-by-mine basis. A limited number of employee shareholding schemes have also been introduced at various public companies in addition to those in the Anglo American group.

Anstey (1990) noted the existence of specialised participative systems in South Africa to deal with such matters as health and safety, productivity, job classification and pension funds. An H.S.R.C. - sponsored survey of 53 firms in Natal, reported by Moodley (1992, p 35) found that a number of

participation processes were employed in 1991. A summary of these findings is contained in table 2.3. Moodley identified a noticeable trend in the gradual introduction of worker participation schemes such as quality circles, green areas, and employee share-ownership schemes during the 1980s. Nevertheless, the data reported in table 2.3 reflected a preponderance of traditional adversarial procedures in South Africa, and a correspondingly low emphasis on the introduction of co-operative processes.

Table 2.3

SUMMARY OF PARTICIPATION TYPES FOUND IN H.S.R.C. SURVEY

FORM OF PARTICIPATION	% OF FIRMS EMPLOYING PROCESS
Trades Union	70%
Collective Bargaining	55%
Quality Circles	50%
Health and Safety Committees	45%
Green Areas	25%
Work Committees	20%
Quality of Working Life Programmes	20%
Liaison Committees	15%
Employee Share Ownership Schemes	15%
Suggestion Schemes	10%
Profit Sharing Schemes	5%
Departmental Meetings	5%
Staff Associations	5%
Contact Groups	5%

(source: Moodley, 1992 p 35)

Cowley (1992) noted that it would be necessary to conduct in-depth research on employee participation in the South African situation:

> '... to ascertain the expectations of employees in this particular socio-political and economic environment. It would be unreliable to simply extrapolate results from overseas studies with very different circumstances.'

A primary aim of this study was to follow this recommendation, by exploring the perceptions of South African mining employees regarding the participation schemes in operation at their employer-organisation.

2.6 CONTROVERSY: DOES PARTICIPATIVE MANAGEMENT 'WORK' ?

Management 'gurus' such as Rosbeth Kanter and Tom Peters strongly endorsed employee participation schemes during the 1980s, as the means via which companies might enhance employees' motivation and their performance. Numerous examples of successful companies utilising participation schemes were cited as evidence of this effect (Kanter, 1983a and 1983b; Peters and Waterman, 1982). Beardwell and Holden (1994) suggested, however, that there may have been a contradiction in what employers and managers wanted from participation schemes and what they were prepared to allow to the workforce in terms of meaningful empowerment. In addition, they suggested that the success of participation schemes would depend on the aims and objectives of each programme.

Commentaries on the 'success' of employee participation schemes have ranged from high praise (Semler, 1989) to substantial reservations (Duncan, 1988; Dunn et al, 1990). Semler (1989) related his experiences as president of Semco S/A, a major and profitable Brazilian manufacturer. The company encouraged employees to vote on many important corporate decisions, allowed them to set their own working hours, and instituted a comprehensive profit-sharing programme. The criteria for successful implementation of participation in the company were identified as simplicity of the system, respect of employees as responsible adults, transparency of corporate information, and flexibility in the budgeting process. Dunn et al (1990) reported on a longitudinal survey of employee share-ownership, and failed to

find any correlation between improved employee attitudes and the introduction of such schemes. These and many other conflicting reports (reviewed systematically in the following two chapters) reflected the inconsistency in the literature regarding the reported effects of participation schemes. This inconsistency of findings has typically led researchers to conclude their reports on participation's effectiveness with comments that 'it depends ... '.

Miller and Monge commented that such reports seldom addressed the question as to exactly 'what it depended on' (1986, p 728). In an effort to address that question, they undertook a meta-analytical review of prior research into the effects of decision-making participation schemes, in the context of three categories of explanatory models of such effects. The next section will review these categories, which represent three different approaches to explaining the impact of employee involvement on job satisfaction and productivity, and particularly the processes through which such effects are achieved.

2.7 EXPLANATORY MODELS OF THE EFFECTS OF PARTICIPATIVE MANAGEMENT

Theorists have provided a variety of theories and models to account for participation's influence on employee satisfaction and productivity. Each theory has emphasised a different explanatory mechanism, but a review thereof can:

> 'enable identification of substantive and methodological variables that could moderate the relationships of participation with satisfaction and productivity'. (Miller and Monge, 1986 p 729)

Miller and Monge (1986) used three categories of models - cognitive, affective and contingency - to highlight differences in the 47 empirical studies reviewed in their meta-analysis. Their study was restricted to analysing the results of prior research into decisional participation schemes. There would appear to be no reason, however, why the three categories of explanatory models proposed by Miller and

Monge (1986) should not also apply to schemes of financial participation. Each of these categories will now be discussed in turn, with particular emphasis being placed on the likely predicted results of each group of participation schemes.

2.7.1 COGNITIVE MODELS OF PARTICIPATION

Cognitive models of participation :

> 'propose that participation leads to increases in productivity through bringing high-quality information to decisions and through increasing knowledge at times of implementation' (Miller and Monge, 1986 p 732).

Such models thus explain improvements in productivity and satisfaction by attributing them to specific contributions by employees on matters in which they are interested and knowledgeable. Theorists supporting such models (e.g. Anthony, 1978; Frost, Wakeley and Ruh, 1974) did so on the premise that co-operative decision-making was more effective, because workers typically had a greater knowledge of their work than managers. Decision-making processes were thus improved due to the accessing of larger pools of information.

Miller and Monge (1986, p 730) predicted specific consequences arising from cognitive models of participative plans, arising from the models' emphases on the importance of information. Firstly, productivity was postulated to be strongest when workers were possessed of high-quality information about prospective decisions. Secondly, increases in job satisfaction would not arise directly from participation, as it was primarily the receiving of information about results that motivated. Thus models falling within this category predicted that individuals were likely to be more highly motivated when participating in decision-making relating to their own areas of expertise, and that there was no direct link between participation and job satisfaction. They also predicted that increases in productivity and satisfaction would only follow from participation in specific decision-areas; a participative climate in the organisation was not adequate.

2.7.2 AFFECTIVE MODELS OF PARTICIPATION

Affective models of participation:

> 'suggest that participation will satisfy higher-order needs of workers and that, as these needs are satisfied, workers will be more satisfied with their jobs' (Miller and Monge, 1986 p 733).

These models thus explain the anticipated relationships between participation, satisfaction and productivity through affective mechanisms of human behaviour. Subordinates are expected to be more satisfied and thus more co-operative merely because they perceive that they are participating in decision-making. However the link between participation and productivity is more tenuous than in cognitive models: employee involvement is postulated to fulfil higher-order needs; fulfilled needs result in job satisfaction which in turn leads to improved worker productivity.

Several researchers (e.g. Coch and French, 1948; Likert, 1967) have concentrated on affective explanations of the effects of participation. Miller and Monge (1986, p 733) stated that affective models predicted that the mere existence of a participative climate in an organisation was sufficient to cause increased workers' productivity. Actual participation in decision-making by employees in their areas of expertise was not, as such, necessary to achieve this effect. Also, the link between participation and productivity was indirect in nature. Improved attitudes flowed directly from participation, leading to reduced resistance to change and increased motivation through the satisfaction of needs. Finally, if employees' higher-order needs were satisfied by other aspects of their employment, participation might have a less noticeable effect on job satisfaction.

2.7.3 CONTINGENCY MODELS OF PARTICIPATION

Contingency models of participation:

> 'suggest that no single model of participation is appropriate for all employees in all organisations' (Miller and Monge, 1986 p 733).

Theorists supporting these models have stated that different workers and organisations would react to participation schemes in different ways, and that there was therefore no 'ideal' single model that would be appropriate for all employees in all situations. Vroom (1959) proposed that individual personality variables such as authoritarianism and need for independence might play a material mediating role in the effects of participation on job satisfaction and productivity. Other variables that have been suggested to intervene in the process of participation include decision-type (Vroom and Deci, 1960), and workers' values (Hulin, 1971).

Various contingency models thus predict, inter alia, that employees with high needs for independence and low authoritarianism will be the most positively affected by participation schemes, that participation is more appropriate when applied to certain types of decision-making than others, that employees who desire participation will be the most positively affected by it, and that these are likely to be higher-level workers.

As will be highlighted in subsequent chapters, aspects of this empirical study were drawn from these cognitive, affective and contingency theories of the effects of participation. The contingency approach will be frequently cited, as the study sought to ascertain which individual and work-specific variables exerted both direct and moderating effects on the outcomes of participation programmes in the gold-mining industry of South Africa.

2.8 CONCLUSION

Walker (1970) stated that workers' participation schemes were instituted or supported at any particular time and place due to the appeal of such arrangements to various groups and interests. He further commented that while doctrines of participation may have been guided by ideological imperatives, the operationalisation of the programmes must cope effectively with:

> '... stubborn human problems of work organisation' (p 434).

Part of this process will entail the:

> '... gathering of empirical evidence on the operation and impacts of workers' participation in management.' (p 435).

In much the same way, this research aimed, inter alia, to make a contribution to the study of participation schemes in South Africa, by gathering and analysing data obtained from the South African gold-mining industry.

The primary objective of this chapter was to provide an overview of the topic of participative management. This has included a review of the major developments in, and the many variates of, employee involvement. The chapter also aimed to highlight various theoretical approaches to explaining the effects of participation, and this was achieved by a discussion of Miller and Monge's (1986) categorisation of such approaches into cognitive, affective and contingency models.

It is therefore considered that the objectives of this chapter have been achieved. The following chapter will review, in depth, the literature on the effects of specific decision-making participation schemes.

CHAPTER 3

THE EFFECTS OF EMPLOYEE PARTICIPATION IN DECISION-MAKING: A THEORETICAL AND EMPIRICAL REVIEW

3.1 INTRODUCTION

The main objective of this chapter is to review, in depth, the literature on the effects of employees' involvement in decision-making relating to their work. Within Jones and Maree's (1989) continuum of worker participation in control discussed in chapter 2 (and reproduced in figure 2.1), this is a 'partial' form of employee involvement. Referring to the categories within that continuum, this chapter will therefore review the literature on a 'limited joint decision-making' type of worker participation.

Prior to addressing the above objective, this chapter will review major theories of employee motivation that underpin the principles of employee participation strategies. These theories have been applied to explain the effects of various elements of work-design, including financial and decisional participation schemes.

The chapter will achieve its main aims by addressing the following sub-objectives:

- by dividing the vast literature on employee participation into three distinctive categories, to facilitate an ordered review and evaluation;
- by providing an overview of the major theoretical foundations of employee motivation that underpin participation strategies;
- by reviewing the empirical research findings relating thereto;
- by reviewing commentators' postulations and theory-building on the effects of employee participation in decision-making on specific employee variables, as well as on organisational performance;

- by reviewing the empirical research findings relating thereto;
- by reviewing commentators' postulations and theory-building on the effects of employee participation in specific areas of work-related decision-making;
- by reviewing the empirical research findings relating thereto;
- by reviewing commentators' postulations and theory-building on the effects of actual versus perceived extents of employee participation in decision-making;
- by reviewing the empirical research findings relating thereto; and
- by evaluating the prior research, with particular emphasis on establishing the degree of support therein for the cognitive, affective, and contingency explanatory models of participation discussed in chapter 2.

The contents of this chapter are arranged in the sequence of the above sub-objectives. Chapter 4 will review, in depth, the literature on financial participation as a distinct sub-section of employee participation. The two chapters will therefore provide a setting against which the literature on integrated participation schemes may be reviewed, which is the objective of chapter 5.

3.2 CLASSIFYING THE LITERATURE

The extant literature on employee involvement in work-related decision-making is vast. To facilitate a review and evaluation thereof, it was necessary to divide it into logical, clearly demarcated categories. In choosing such groupings, recognition was made of Popper's (1972) views on theories, observations and research. He stated that in all cases, observations and interpretations are undertaken in the light of theories.

Emory and Cooper (1991) defined a theory as:

> '.. a set of systematically interrelated concepts, definitions, and propositions that are advanced to explain and predict phenomena (facts)';

and stated (p 62) that:

> '.. theories are used to explain or predict what goes on around us.'

Emory and Cooper (1991) were thus suggesting that theory may precede or follow a researcher's observations. Popper, however, stated that observations are selective and do not precede the creation of theory, because they cannot be made in a theory-void vacuum. Magee (1973) supported this view and stated (p 34) that the sequence of activities in the scientific method of research is therefore theory-building, followed by hypothesis-creating, and then empirical observation. The results of such observation are used to attempt to falsify the (null) hypothesis of interest. If the null hypothesis is not supported, this may lead to the creation of new propositions and theories. The scientific method is therefore dynamic and cyclical in nature, but clearly commences each 'cycle' at the theory-creation stage.

It was decided to use Popper's (1972) analysis as a heuristic tool by reviewing the literature within categories that corresponded to his sequence of the logic of scientific discovery. Each section will therefore be reviewed in the following order:

- firstly, literature containing commentators' propositions and theory-building will be reviewed; and this will be followed by
- the reported empirical testing of relevant hypotheses, including the results of such tests.

Most of the literature falls clearly within the above categories. Those items that do not have been dealt with as follows:

- purely descriptive or anecdotal commentaries on case-studies of employee participation have been identified as such, and included in the first category. This is because they do not constitute empirical hypothesis-testing studies, but are rather proposition- or hypothesis-generating in nature; and

- certain items within the literature that are themselves reviews of prior works have been dealt with separately. While some of these studies (e.g. Miller and Monge's 1986 meta-analysis) are hypothesis-testing and will be reported on within the main body of this chapter, they will be further discussed and evaluated in separate sections of this chapter. This is because they address a major theoretical area of the subject, namely the explanatory theories of how employee involvement works, in terms of the cognitive, affective and contingency models discussed in chapter 2.

3.3 THE LITERATURE ON THE THEORETICAL FOUNDATIONS OF EMPLOYEE INCENTIVES AND MOTIVATION: A REVIEW

This section reviews major theories relating to employee incentives and motivation within the literature. These theories have underpinned the work-design and remuneration strategies of many organisations (Beardwell and Holden, 1994), and have guided a number of research studies on employee participation.

Four main theories of motivation dominate the literature in relation to employee participation strategies. These are Maslow's (1943) hierarchy of needs, Herzberg's (1966) two-factor theory of motivation, Vroom's (1964) expectancy theory, and Adams' (1965) equity theory. In addition, Porter and Lawler (1968) extended Vroom's (1964) expectancy principles, and Adams' (1965) equity concepts, and developed an integrated model of contingent rewards, employee motivation and performance. These theories and models will be reviewed in the following sections of this chapter.

3.3.1 MASLOW'S HIERARCHY OF NEEDS

Maslow (1943) devised a theory of human nature that proposed a 'hierarchy' of instinctual needs that were required to be satisfied for each individual. Each category of needs, in sequence from the lowest to the highest position in Maslow's (1943) 'hierarchy', can be described as follows:

- the physiological needs refer to basic survival wants of

individuals, including such basic demands as food, shelter, rest, and sleep;

- safety and security needs refer to the necessity to be protected from physical and psychological threats and thus address issues such as individuals' physical safety, their freedom from fear, and their desire for certainty regarding the future;
- social needs include requirements for affection, friendship, and social interaction with others;
- ego needs are concerned with issues of individuals' self-respect, self-esteem, confidence, status, and power; and
- self-actualisation - the highest level of needs on the hierarchy - refers to the needs for achievement, individual growth, and the realisation of an individual's potential.

Maslow's (1943) theory suggested that individuals would seek to address their lower-order needs in the first instance. Once such needs had been satisfied, the desire to satisfy higher-order needs would become prominent. Thus individuals would be motivated to progressively rise up the 'hierarchy', by substantially satisfying each level of needs, until the final level of 'self-actualisation' was reached.

The primary implication of this theory for corporate managers lies in the recognition of higher need levels, as well as basic needs, in the design of an individual's work and remuneration package. As the profile of needs within this framework will differ from one employee to another, it is incumbent on an organisation's management to design the work and financial reward structures appropriately. Maslow's (1943) theory thus underpins both financial and decisional participation schemes.

3.3.1.1 Empirical Studies Relating to Maslow's Theory

A number of researchers in various countries have investigated the validity of Maslow's (1943) propositions. The findings have not consistently supported the rankings of the original 'hierarchy', however. Hofstede (1980a) found that social

needs, as opposed to individualistic or self-actualisation needs, dominated the motivation of employees in countries that tended to emphasise quality-of-life issues (such as the Nordic states), and in more collectivist societies such as Pakistan. Howell et al (1975) found that managers in Liberia identified similar needs to those in South Africa, Argentina, Chile and India. Their needs in respect of security and self-esteem were higher, however, than those of their counterparts in more 'developed' countries such as the United Kingdom and Germany.

Buera and Glueck (1979) compared the ordering of needs for managers in Libya and the United States, and found the rankings to be different. This led Buera and Glueck (1979) to conclude that employees' 'hierarchies' of needs varied from culture to culture.

Studies supporting a more consistent ranking of needs across different cultures included that of Reitz (1975). He found that workers in eight countries (The United States, Mexico, Venezuela, Thailand, Japan, Turkey, Yugoslavia, and Puerto Rico) all ranked self-actualisation needs more highly than security needs.

These conflicting research findings have led commentators to suggest that while a hierarchy of workers' needs may indeed exist, the ranking of needs within that hierarchy may differ between cultures. O'Reilly and Roberts (1973), in considering the different determinants of job satisfaction among white and non-white employees, suggested that this phenomenon was due to the different 'frames of reference' of individuals in different cultures.

Thus Maslow's hypothesised 'hierarchy' has proven to be a difficult concept to operationalise and test in practice. Nevertheless, the implications of Maslow's theory, if it can be supported, are substantial. Backer (1973, p 8) suggested, for instance, that only those employees who satisfied their basic needs and who attended to those towards the top of Maslow's 'hierarchy' would fulfil their full potential. He

further suggested (Backer, 1973 p 9) that the theory was:

> '...a valuable guide to the intricate South African situation with a worker force predominantly non-white in different stages of urbanisation as opposed to a predominantly white management force resulting in a pattern of need satisfaction of great variety.'

Many studies have been undertaken within the South African gold-mining industry, to investigate motivational factors among employees of black and white cultural groups. Wyndham (1971) summarised a number of the research findings from studies undertaken in the 1960s:

- 'positive motivators' for 'contract shovellers and trammers' were: 'good treatment', and a good rate of pay. Achievement, promotion and responsibility were not identified as motivators for these employees;
- 'drillers' were motivated mainly by cash rewards, including production bonuses;
- 'boss boys' were motivated by status and prestige, by a sense of achievement, and by their rates of pay;
- 'negative moderators' included lack of communication, especially rejection by supervisors when advice was sought from them, poor money rewards, and lack of attention to safety; and
- bonus schemes which were not understood, or in which there was no clear relationship between effort and reward, or which were perceived to be unfairly scored or administered, had a negative effect on workers' motivation.

Although more recent studies of employee motivation in the South African gold-mining industry have been undertaken (e.g. Mitchell et al, 1988), the basic pattern of 'motivators' and 'demotivators', as listed above, remains unchanged. Mitchell et al (1988) noted, for instance, that 'black general employees' had:

> '...a strong and partly unsatisfied need to belong, to be part of the corporate community, and be a member of a team... they perceive their jobs to be

lacking in security, responsibility, variety, scope to apply individual abilities, pay and opportunities for promotion.' (1988, p 3)

3.3.2 HERZBERG'S TWO-FACTOR THEORY OF MOTIVATION

Herzberg (1966) distinguished between 'hygiene' factors and 'motivators' in the work situation. This two-factor theory of motivation is illustrated in figure 3.1.

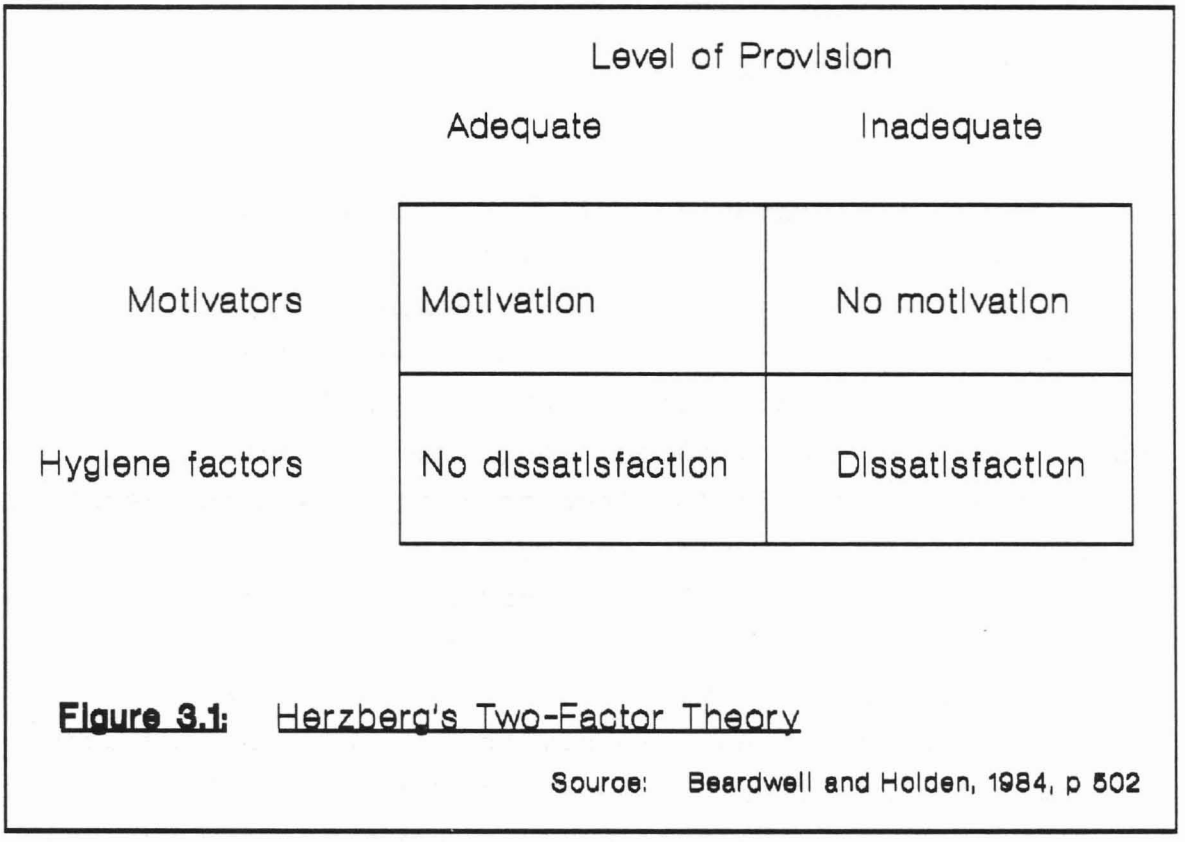

Figure 3.1: Herzberg's Two-Factor Theory

Source: Beardwell and Holden, 1984, p 502

Factors in the working environment such as pay, working conditions, supervision, administration and interpersonal relationships, were classified by Herzberg (1966) as 'hygiene factors'. These he suggested played a role in preventing dissatisfaction and demotivation in the workforce, but were not capable of actually motivating staff. 'Motivating factors' included interesting and meaningful work, achievement, recognition, responsibility and advancement. Herzberg (1966) suggested that should such factors be absent from the work situation, employees would lack motivation. In terms of this theory, therefore, managers should ensure that both 'hygiene

factors' and 'motivators' are effectively dealt with. Backer (1973, p 17) expressed his opinion that Herzberg's (1966) 'motivator-hygiene' concept possessed great potential for future research into the complex pattern of work motivation in multi-racial South Africa. In terms of the theory, however, pay is merely a 'hygiene' factor and as such is incapable of actually motivating employees. The theory therefore underpins decisional, but not financial, participation schemes. The following sub-section will review some of the research studies that have attempted to support Herzberg's (1966) theory.

3.3.2.1 Empirical Studies Relating to Herzberg's Theory

Herzberg developed his (1966) two-factor theory of motivation from empirical data. However subsequent research studies into the validity of his theory have, as was the case with Maslow's (1943) theory, failed to produce consistent results. Hines (1973), in a study of employees' needs in New Zealand, found that supervision and interpersonal relationships contributed significantly to job satisfaction. This was not consistent with the predictions of Herzberg (1966), who's theory stated that such factors would merely limit employee dissatisfaction. Further conflicting results were reported by Crabbs (1973), who undertook a study of individuals' needs in the Panama Canal Zone. He found that there were significant differences between the most frequently-cited 'hygiene factors' as satisfiers among United States personnel, and those identified by non-American citizens.

Adler (1986) commented that the research into Herzberg's (1966) two-factor theory suggested that its universality could not be assumed. She suggested (Adler, 1986) that the specific factors that acted as motivators or hygiene factors, and their relative importance, differed between cultures. It was therefore incumbent on managers employing personnel from different cultures to assess which factors were important for the different culture groups. In the context of this study, it might therefore be of particular importance to assess whether, for each cultural group on the gold-mine, pay should be

classified as a 'motivator' or 'hygiene factor'.

3.3.3 VROOM'S EXPECTANCY THEORY

The 1960s saw the development of a considerable body of process-type theory in the area of workers' motivation. These theories provided a dynamic theoretical basis for the structure of work-design strategies. They considered the relationships between employees' efforts, performance and reward and the processes via which such reward strategies might achieve their objectives. Vroom (1964) proposed that an individual's motivation to perform a task was a function of the product of two factors, being his 'expectancy' and his 'valence' in respect of the likely outcomes thereof.

The 'expectancy' variable of this proposed relationship referred to the individual's degree of expectation that the anticipated outcome (e.g. a financial reward or promotion) would actually be provided upon completion of the task; the 'valence' referred to the relative worth of the reward (which might or might not be monetary in nature) to the recipient. The relationship between these variables was proposed by Vroom (1964) to be multiplicative, as opposed to additive. This reflected his proposition that both measures were necessary, but not sufficient, determinants of an employee's motivation to perform any given task.

3.3.3.1 Empirical Studies Relating to Vroom's Theory

Empirical support for Vroom's (1964) expectancy theory has been provided by a number of researchers. Schuler (1980), in testing a role and expectancy perception model of participation in decision making, found positive relationships between participation in decision-making and the performance-reward expectancy of employees. Schuler (1980) also found a positive association between participation in decision-making and an individual's satisfaction with his or her work and supervisor.

Research into the effects of perceived work-goal difficulty has frequently been founded on expectancy principles. Examples

of studies indicating that an employee's commitment reduced, as his perceived chances of attaining his work-goals diminished, include those of Erez et al (1985), Locke (1982), and Shalley and Oldham (1985). Erez and Zidon (1984) conducted a laboratory experiment with technicians, who were shown a set of artificially high work targets. The technicians' goal acceptance and performance declined significantly, as a result of the perceived difficulty of these targets.

3.3.4 ADAMS' EQUITY THEORY

Adams (1965) proposed that an employee continuously assessed the 'equity' of the relationship between his or her 'inputs' and 'outcomes', in comparison with the same relationship for some other individual or group. 'Inputs' in this context included the employee's work experience, effort, education and training. 'Outcomes' included supervisory treatment, fringe benefits, status symbols, but most importantly (Mowday, 1991) the employee's pay.

Adams' (1965) equity theory proposed that individual employees weighted their own 'inputs' and 'outcomes' in accordance with their relative importance, and that these weights were summed to arrive at total 'inputs' and 'outcomes' for each person. Further, the same employees were proposed to similarly weight the perceived 'inputs' and 'outcomes' of their colleagues.

'Equity', in terms of this theory, existed when the ratio of one individual's 'outcomes' to his or her 'inputs' was equal to the same ratio for another individual's 'outcomes' and 'inputs' (as perceived by the first employee). 'Inequity' occurred when these two ratios were unequal, and was predicted (Mowday, 1991) to lead to various dysfunctional behaviours on the part of the employee perceiving the 'inequity'. These actions could include (Mowday, 1991 p 115) a reduced productivity level for hourly-paid workers who perceived they were underpaid, but an increased level of production for piece-rate-paid employees with similar feelings of 'inequity'.

Adams (1965) predicted six possible courses of action to

resolve employees' feelings of 'inequity'. These were the altering of their inputs (e.g. less effort by the employees), the altering of their outcomes (e.g. higher pay from the employer), cognitive distortion by the employee of the inputs or outcomes, resignation by the employee - usually a last resort (Mowday, 1991 p 114), changing the actual inputs or outcomes of the 'other individual' in the equity comparison, or, finally, changing the 'other individual' of the comparison (i.e. switching the comparison to another colleague).

3.3.4.1 Empirical Studies Relating to Adams' Theory

A considerable body of research, testing the predictions of Adams' (1965) theory, exists in the literature. Most of these studies have provided support for the theory. Adams and Rosenbaum (1962) found that hourly-paid workers who perceived that they were overpaid produced significantly higher output, while piece-rate workers with similar perceptions produced less quantity. Arrowood (1961) replicated these findings in an experimental study of interviewers, and found a higher rate of productivity amongst 'overpaid' subjects. Wiener (1970) also found support for Adams' (1965) equity theory in a word-manipulation experiment. He found that 'outcome-overpayment' subjects in the experiment produced significantly more than other subjects.

Some researchers have failed to support Adams' (1965) theory, however. Anderson and Shelly (1970), in a study of the productivity of proofreaders, found no significant differences in the levels of output of 'overpaid' individuals. Valenzi and Andrews (1971) studied productivity levels and output quality amongst hourly-paid clerical workers. They identified no significant differences in these outcome variables between overpaid and underpaid individuals. They did however find moderate support for Adams' (1965) proposals of potential actions to resolve situations of perceived inequity, in that 27 percent of the underpaid subjects quit their jobs. Mowday (1991, p 120) commented that such research findings provided a degree of support for Adams' (1965) equity theory. He noted, however, that support was strongest for predictions about

perceived underpayment inequity. Empirical studies into the effects of perceived overpayment inequity have tended to identify differences in productivity and satisfaction in the predicted directions, but seldom at statistically significant levels.

3.3.5 PORTER AND LAWLER'S MODEL OF MOTIVATION

Vroom's (1964) expectancy theory was integrated with Adams' (1965) equity theory of motivation by Porter and Lawler (1968), in their development of an enlarged process model of motivation and rewards. Porter and Lawler's (1968) model of motivation is presented in figure 3.2. The model is a representation of proposed relationships between employees' perceptions, the intrinsic and extrinsic rewards offered by the work situation, and the employees' levels of effort, satisfaction and performance. The model is noteworthy for its integration of intrinsic and extrinsic rewards as potential motivators, and for containing a number of 'feedback loops', thus making it non-recursive in nature. Such 'feedback loops' are similar in concept to the principle of 'positive reinforcers' within behavioural reinforcement theory - i.e. the intrinsic and extrinsic rewards strengthen the probability of 'operant responses' (Skinner, 1953). Such responses were explained by 'Thorndike's (1911) Law of Effect'. This stated that behaviour which appeared to result in positive consequences tended to be repeated, while behaviour which appeared to lead to negative consequences tended not to be repeated.

Pinder (1984) noted that the complexity of Porter and Lawler's (1968) model reflected the ongoing dynamic nature of the motivation process, but also indicated why some workers were more productive than others. It also reflected, Pinder (1984) suggested, why some workers experienced greater levels of job satisfaction than others, and also under what circumstances such enhanced job satisfaction might lead to improved performance.

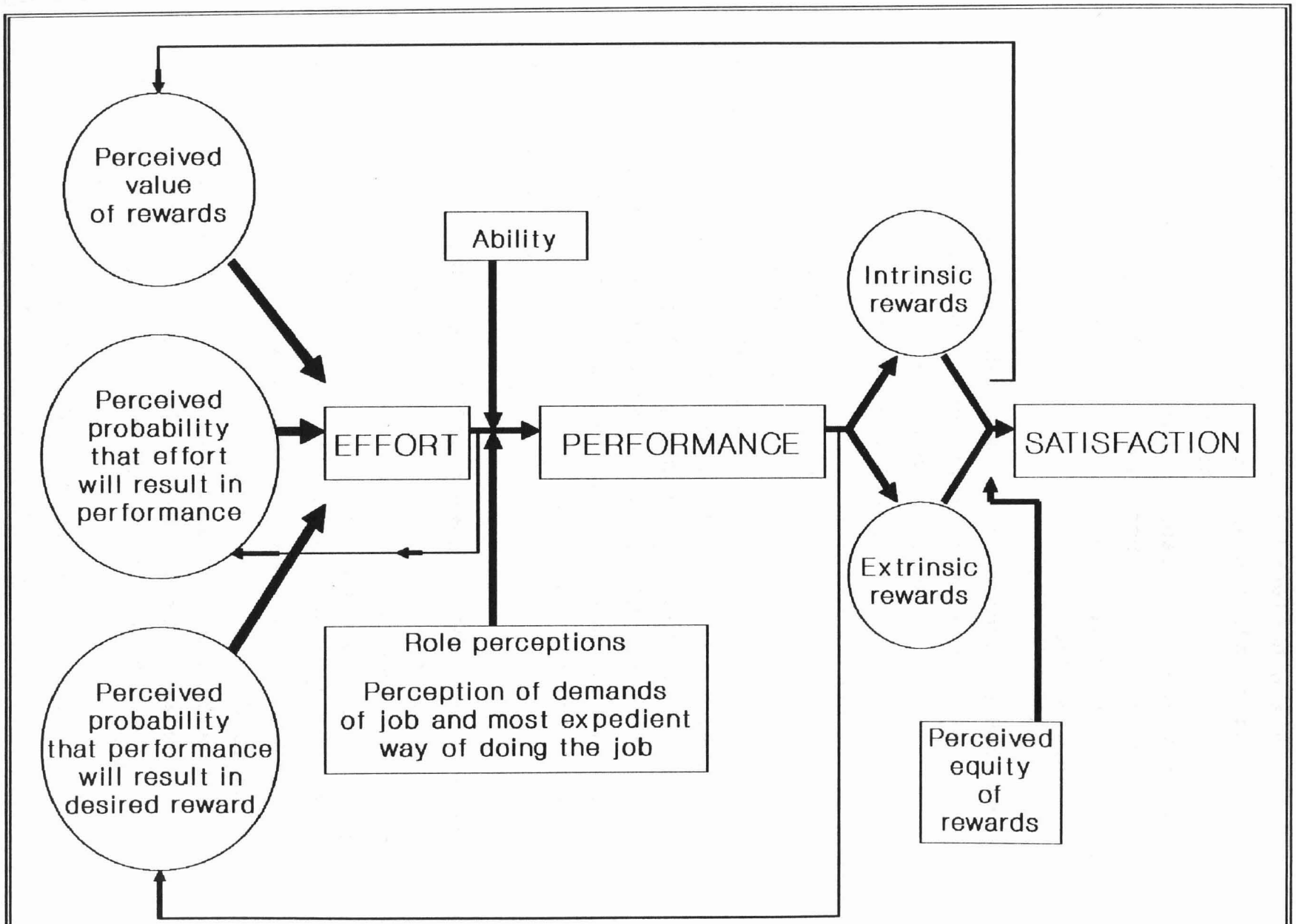

Figure 3.2: Porter and Lawler's Model of Motivation

Source: Beardwell and Holden 1994, p503

Porter and Lawler's (1968) model provided a substantial contribution to the theory on the effects of rewards and remuneration, and incorporated:

- intrinsic rewards, which closely reflected Herzberg's (1966) motivating factors and emanated from the person or work itself. Examples included work-variety, increased responsibility, participating in goal-setting, and job recognition; and
- extrinsic rewards, similar in nature to Herzberg's (1966) hygiene factors, and which were provided by people other than the employee, such as supervisors or management. Examples included pay, fringe benefits and promotion.

The distinction between reward-types made in this model makes it particularly relevant to this research study. The model suggested that intrinsic rewards may be provided by decision-making participation, and extrinsic rewards by financial participation programmes. Both of these types of employee involvement were operated simultaneously on the subject mine, and thus elements of Porter and Lawler's (1968) model guided the research strategy, as will be detailed further in chapter 10.

Beardwell and Holden (1994) commented that the Porter and Lawler model had considerable implications for management control. By linking the occurrence of a desired behaviour to some form of reward, a degree of predictability of employees' behaviour could be achieved. By introducing and enforcing such norms of behaviour, management were able to control the workers when close supervision was not possible. Further, Beardwell and Holden (1994) suggested that effective power in such an organisation would reside in managers who had discretion as to which behaviour to reward.

The Porter and Lawler (1968) model also incorporated a number of principles which Beardwell and Holden (1994, p 504) identified as relevant for management in their determination of which employee behaviours should be rewarded, and in what manner:

- the rewards (intrinsic or extrinsic) offered by the employer must be valued by the employees;
- employees must perceive that improved performance on their part will result in the receipt of the desired rewards;
- employees must believe that their rewards will directly reflect the effort that they put into their work;
- employees must be given opportunities to behave in the 'required manner', and therefore conditions must exist in the organisation which allow staff to carry out their delegated tasks;
- communication within the organisation must be clear and explicit, with management's expectations and objectives clearly understood by the employees; and
- managers must ensure that rewards are clearly and visibly linked to performance, thus increasing expectations that desired performance will indeed be rewarded.

Beardwell and Holden (1994) suggested that if the above principles were materially violated, the direct link between desired behaviour and desired rewards as reflected in Porter and Lawler's (1968) model would be broken. As chapter 9 will detail, many of the above principles were incorporated into the research sub-problems and hypotheses of this study, to explore for their relevance within the South African gold-mining industry.

3.3.5.1 Empirical Studies Relating to Porter and Lawler's Model

Porter and Lawler (1968) developed and modified their model pursuant to a detailed research study undertaken on a sample of American managers. No subsequent empirical study by others, testing the entire model, could be located in the literature. Elements of Porter and Lawler's (1968) research and model have however been criticised by commentators on the following grounds:

- its primary focus was on the role of pay in motivating employees, and Porter and Lawler's (1968) assertion that the model could be applied to other incentives (such as

promotion or decision-making participation) has not been empirically supported (Pinder, 1984);

- Porter and Lawler (1968) tested their propositions cross-sectionally (rather than longitudinally). They have been further criticised for restricting their tests to those managers who scored at the extremes of the scales for job satisfaction and performance. They thus omitted from their study the majority of managers, who recorded 'average' scores on the dependent variables of interest. This methodology has been faulted by Taylor and Griess (1976), on the basis that it overestimated the validity of the model being tested; and
- the specific role of employees' abilities was not included in Porter and Lawler's (1968) research. Pinder (1984) suggested that ability may indeed have played an important role in determining employee performance levels.

3.4 THE LITERATURE ON THE EFFECTS OF EMPLOYEE PARTICIPATION IN DECISION-MAKING

No single theory of the effects of employee participation in decision-making dominates the literature. Rather, as noted by Miller and Monge (1986), there is a wide-ranging body of thinking and research on work-place participation, which has led to disagreement as to the effects and justification thereof. Locke and Schweiger (1979) further noted that a number of commentators advocated the use of employee involvement on moral grounds, irrespective of whether it actually achieved its objectives or not. This has added to the confusion surrounding the topic.

Thus, rather than a specific theory of participation being developed and tested, a more general body of theories and propositions has built up, and been tested through empirical research. As will be discussed in this review, most commentators on research into employee participation have qualified their conclusions by stating that the effects depended on a number of factors. There has recently been some considerable effort directed towards assessing what those

factors might be, specifically in the form of meta-analyses of the prior research (e.g. Miller and Monge, 1986: Wagner and Gooding, 1987).

In building up the general body of theory on the effects of employee participation in work-related decision-making, commentators have proposed that these include: enhanced employee commitment motivation and loyalty, improved industrial relations and worker productivity. In turn, these anticipated attitudinal and behavioural outcomes have been postulated to result in an overall improvement in the organisation's operational and financial performance.

The attitudinal and behavioural benefits of employee participation in decision-making appear to have been anticipated by firms in South Africa, as well as overseas. This was demonstrated by Maller (1988), who found that South African managers indicated their reasons for introducing participation schemes as being to improve business efficiency, worker performance, and to attract and retain staff.

Although this study was restricted to the topic of participation by employees, it is noteworthy that various researchers have found positive effects from involving other parties in decision-making processes. O'Reilly (1989) demonstrated that such phenomena were not limited to employees. He found that customers responded positively to filling out their own order-forms when purchasing from direct-sales companies. The volume of order-cancellations was drastically cut, compared to situations where orders were filled in by the firms' own salespeople. Galanter (1980) documented a process of participation for the recruitment of cult members into the Unification Church in the United States. He suggested that the cult's system of 'incremental choice and participation', whereby potential members were progressively included in forums with greater degrees of decision-making influence, was a major cause of their high recruitment rate.

This review of the literature will initially address two main categories of the postulated effects of decision-making participation. Firstly, the literature on postulated attitudinal effects will be reviewed. Secondly, the literature on the effects on employee performance will be discussed and evaluated.

3.5 THE LITERATURE ON THE EFFECTS OF EMPLOYEE PARTICIPATION IN DECISION-MAKING ON THEIR WORK-RELATED ATTITUDES

3.5.1 PROPOSITIONS AND THEORY-BUILDING

O'Reilly (1989) discussed employee participation schemes in the context of organisational culture and suggested that, from a management perspective, a culture that took the form of shared expectations could be regarded as a social control system. This begs the question: what is a social control system?

Machin noted that, in managerial terms, 'control' had been defined as:

> '.. the process of ensuring that the organisation is adapted to its environment and is pursuing courses of action that will enable it to achieve its purposes' (1983, p 30).

A social control system therefore encourages employees to work towards attainment of the organisation's goals. Etzioni (1961) suggested that organisations could be classified according to their goal-alignment, i.e. the extent of commonality between individual and organisational objectives. He thus distinguished between:

- normative organisations such as churches and charities, where there was general agreement on and commitment to goals;
- instrumental organisations, such as businesses, where there was neutrality between individual and organisational goals; and
- coercive organisations, such as prisons and the conscripted armed forces, where most individual goals were opposed by organisational goals.

Otley and Berry (1980), in discussing this categorisation, noted that in instrumental organisations such as businesses, the predominant design of control systems was one where an exchange of inducements was provided by the firm to gain contributions from the individual employees. O'Reilly (1989) also identified participation systems as being the primary mechanisms that were critical in developing or changing a firm's culture. Such systems, he proposed, encouraged employees to be involved and would also send signals to the workforce that they were valued by management. From a psychological perspective, this encouragement to make incremental choices was postulated to develop a sense of responsibility for their actions among participating employees, which in turn would lead to a greater sense of commitment.

This psychological, or affective, approach was also supported by Locke and Schweiger (1979), who suggested that participation in decision-making would lead to greater fulfilment of employees' psychological needs, thus providing enhanced job satisfaction. Mitchell (1973) agreed, and suggested that this effect of enhanced job satisfaction was achieved through greater social pressure on all employees to comply with organisational decisions.

Other theorists who have proposed direct relationships between decision-making participation and employee attitudes include Coch and French (1948), who suggested that participation would assist in greater understanding and acceptance of decisions by employees. Similar propositions regarding improvements in workers' attitudes and performance arising from schemes of decision-making participation were forwarded by Long (1978a, 1978b and 1982) and Vroom (1959 and 1960).

A further attitudinal consequence of employee participation in decision-making was proposed by Drago and Wooden (1991), who postulated that there was a positive relationship between participation and employees' subsequent desires for it. This idea has important implications for firms contemplating

participation programmes, because employees falling under such plans may perceive that the extent or nature of involvement does not meet their aspirations, and demotivation may result. The introduction of participatory management may, under such circumstances, thus actually be counter-productive. This proposition is also consistent with the results of research undertaken into employees' desires for participation (e.g. Heckscher, 1988) which has supported the notion that there is a 'new breed' of worker demanding greater autonomy in the workplace.

A number of South African commentators have also noted the potential motivating effect of involving employees in work-related decision-making. Moi (1988, p 20) stated that:

> 'Even at the lowest levels (i.e. unskilled jobs) workers can be given a sense of pride and achievement ... They can be allowed to solve their own work problems, even though they may be relatively simple problems.'

Nel (1984) noted various 'positive' aspects of employee participation, including increased status, greater worker-efforts to achieve work-targets, and a more co-operative attitude between workers and employer. This, he suggested, would lead to improved teamwork, efficiency and profits. He also noted (Nel, 1984 p 15) certain 'negative' aspects of participation in work-related decision-making. These, he suggested, included a likely adverse disposition by workers towards participation if employers failed to take action, after employees had been consulted and a course of action decided upon. A further possible 'negative' aspect was, Nel (1984) suggested, a perception by some employers that worker participation in decision-making was an illegitimate intrusion upon the employer's prerogatives.

3.5.2 EMPIRICAL STUDIES: HYPOTHESIS-TESTING RESEARCH

The literature contains numerous empirical studies that have demonstrated the existence of significant relationships between employees' participation in work-related decision-

making and enhanced attitudes and motivation. Such studies have also included a number of reviews and meta-analyses of prior research. This section will outline some of the most noteworthy of these studies and reviews.

Miller and Monge (1986) undertook a meta-analysis of 47 studies into the effects of participation schemes. The term 'meta-analysis' was proposed by Glass to describe the:

> '.. statistical analysis of a large collection of analysis results from individual studies, for the purpose of integrating the findings' (1976, p 3).

The strength of the meta-analytic approach lies, inter alia, in its ability to consider the strength of effects between variables, rather than simply counting the number of significant results obtained, and their associated statistical significance. Miller and Monge (1986) also supported the use of meta-analysis for their review because it considered:

> '... both substantive and methodological moderator variables that could account for unexplained variance in estimates of effects.' (1986, p 729).

The meta-analysis reported that 41 of the 47 selected studies had established significant correlations between participation and job satisfaction. The weighted mean correlation was $r = 0.34$, but a chi-square test revealed that the true variance of 0.0301 (χ-sq. = 244.27, df = 40, $p < .01$) was statistically different from zero. This indicated that moderator variables would reduce the variance in the estimates. Miller and Monge's (1986) search for, and evaluation of, such moderating variables will be reported in section 3.12 below, and a detailed discussion of potential moderating factors on the effects of participation will be provided in chapter 7. Nevertheless, Miller and Monge's (1986) meta-analysis provided substantial support for the proposition that participation processes have an enhancing effect on job satisfaction.

Further empirical support for a hypothesised positive

association between participation and job satisfaction was provided by Kelly and Kelly (1990), who reviewed seventeen case studies of employee involvement, and found a strong relationship between the introduction of decision-making participation schemes and improved workers' attitudes. They noted however that in some cases this phenomenon did not extend to affecting the underlying climate of management-worker relations in the surveyed firms. This failure to reduce 'them and us' attitudes was attributed to a lack of choice over the initiatives, a lack of trust between workers and employers, a perceived lack of support from top management, and a perception of unequal status and outcomes between management and employees.

Additional supporting evidence was provided by Patchen (1970), who studied the effects on employees' feelings of integration of participation in decision making. The subjects in the study were technicians and laboratory-testers at the Tennessee Valley Authority in the United States, and Patchen (1970) found that such participation did indeed result in increased feelings of integration in the organisation.

Hines, in a survey of 1,312 New Zealand workers also found that:

> 'The overall results strongly support the contention that there is a positive relationship between high participation and high job satisfaction'
> (Hines, 1974 p 337).

A number of researchers have used the concept of 'decisional deprivation' (i.e. actual participation in fewer decisions than desired) to measure the perceived extent of participation by employees. Ivancevich (1979) studied the relative decisional 'saturation' of 154 project engineers, and found a significant difference in attitudinal variables between 'deprived' and 'saturated' groups. 'Decisionaly-deprived' employees scored significantly lower than 'decisionaly-saturated' groups in measures of job satisfaction and organisational commitment.

Alutto and Acito (1974) also used this 'decisional-deprivation' measure in a study of a New York manufacturing firm, and found that decisionaly-deprived individuals possessed negative feelings towards their employer and were less committed to their current jobs. They were also less satisfied with their work and their supervisors, and tended to be in-line personnel. This latter point suggested that an employee's work-site and status in the organisation may have been moderating factors on the effects of decision-making participation.

Alutto and Vredenburgh (1977), in a study of participation programmes for hospital nurses, also found a positive relationship between decisional deprivation and lower levels of satisfaction with promotion, pay, work and supervision. Decisionaly-satisfied nurses, as expected, recorded higher degrees of satisfaction. Alutto and Vredenburg (1977) noted however that their research was a cross-sectional and correlational study, which was unable to suggest the directionality of such relationships. They thus acknowledged that, rather than participation having improved job satisfaction, it may have been that people who were satisfied with their jobs tended to report that they had greater opportunity to influence decisions in their work.

The proposition that the introduction of decision-making participation would lead to an enhanced desire by employees for it (Drago and Wooden, 1991) was supported by Hill (1991), who reported on a cross-sectional survey of quality circles in the United Kingdom. He identified a strong desire for greater participation in decision making for all employees, and further noted that employees valued such schemes of participation, even though their managers may have believed that they did not.

Not all research into the effects of employee participation has been unambiguously supportive of a positive effect on employee attitudes. In a detailed review of prior research into participation in work decisions, Cotton et al (1988)

found that the reported effects on job attitudes were inconsistent. Four out of the six identified studies found improvements in job satisfaction, but such improvements were only significant in two cases. Latham and Yukl (1976) actually noted a decrease in job satisfaction after the implementation of a participation programme, and Bradley and Hill (1983 and 1987) found quality circles to be of limited value in terms of achieving improved employee attitudes.

Locke and Schweiger (1979) reviewed prior research studies into the effects of participation, under the categories of 'participation superior', 'participation inferior' and 'no difference'. They noted that while employees generally favoured participation management methods, forty percent of the studies did not in fact find participation to be a superior management strategy in terms of its effect on job satisfaction.

3.6 THE LITERATURE ON THE EFFECTS OF EMPLOYEE PARTICIPATION IN DECISION-MAKING ON THEIR PRODUCTIVITY AND PERFORMANCE

3.6.1 PROPOSITIONS AND THEORY-BUILDING

As discussed in chapter 2, employee involvement has been proposed by many theorists as a means of improving employee, and thus organisational, productivity and performance. Most research efforts have attempted to evaluate participation programmes in terms of individual or group performance (e.g. Coch and French, 1948; Fleishman, 1965), while relatively few have extended their assessment through to the organisational level (e.g. Long, 1978a and 1978b). The following section will review the reported empirical research into the effects of participation in decision-making on employees' levels of work-related productivity and performance.

3.6.2 EMPIRICAL STUDIES: HYPOTHESIS-TESTING RESEARCH

Miller and Monge's (1986) meta-analysis into the effects of employee participation in decision-making included a review of studies that had measured the effects on employee productivity. They reported 25 significant correlations between participation and productivity, from the 47 studies

included in their meta-analysis. The mean correlation was only in the order of r = 0.15 however, compared to a mean correlation of r = 0.34 between participation and job satisfaction. These findings thus suggested that the relationship between participation and productivity was less striking than that between participation and job satisfaction. Nevertheless the meta-analysis suggested the existence of a small but statistically significant relationship under certain conditions. Miller and Monge (1986) again considered the existence of moderator variables, this time on the participation - performance relationship. They concluded from a chi-square result showing that the variance of 0.0334 differed significantly from zero (χ-sq. = 69.47, df = 25, $p < .01$), that such moderators did indeed exist.

Cotton et al (1988) reviewed fifteen prior studies of the effects of decision-making participation on productivity. Eleven of the studies were found to reflect increases in performance and / or productivity. Only one study reported a decrease. Due to the consistency of these results and the range of situations and methodologies applied, they concluded that there was a strong case that performance and / or productivity were enhanced by such participation schemes.

A further analysis of prior participation studies was conducted by Hoerr (1989a and 1989b), who concentrated on programmes instituted within the automobile industry of the United States. He ascertained that employee-level productivity gains were associated with the introduction of the involvement programmes.

As reported within studies of the attitudinal effects of employee involvement, the measure of 'decisional deprivation' has also been used by various researchers in assessing the effects of decision-making participation on productivity and performance. Ivancevich (1979) studied the relationship between the degree of decisional deprivation and performance amongst 154 project engineers in a single engineering and construction firm. A strong relationship was identified, with

highly deprived participants performing poorly. However decisional 'saturation' was also identified, which led Ivancevich (1979) to suggest that providing engineers with too many decision-making opportunities could lead to reduced performance.

Not all reported research has included significant positive associations between participation and performance. Locke et al (1980) analysed a collection of field studies for relationships between participation and improved productivity, and reported that the introduction of employee involvement resulted in a negligible change in productivity.

Schuster (1983) studied the effects of participation in decision-making, as an element of gainsharing programmes. His findings were also ambiguous. Of seventeen identified sites where employees were involved in decision-making, only eight recorded positive changes in productivity levels, while seven evidenced no change. Two of the sites actually recorded declines in productivity. Similar failures of participation programmes to achieve their objectives of, inter alia, improving worker performance were noted by Ambler and Overholt (1982). They reported that 50% of American quality circles collapsed during the early 1980s.

Conflicting and ambiguous results such as those reported above have influenced some commentators to question the existence of a significant relationship between participation in decision-making and employee performance and/or productivity. Such reservations were expressed by Locke and Schweiger (1979), who undertook 'one more look' at participation in decision making, and considered both moral and practical aspects of such schemes. In evaluating the evidence regarding the effects of participatory leadership styles on employee productivity, they concluded that there was no support for proposing that such styles were superior to more directive styles.

3.7 THE LITERATURE ON THE EFFECTS OF EMPLOYEE PARTICIPATION IN DECISION-MAKING ON THEIR ABSENTEEISM AND TURNOVER

3.7.1 PROPOSITIONS AND THEORY-BUILDING

Labour absenteeism and turnover have both been postulated to be reduced by employee participation schemes. This was suggested by, amongst others, Hirschman (1970) in his proposal of an 'exit-voice trade-off' amongst employees. Further, participation has been suggested to provide an additional element of job security for workers, due to their involvement in, and thus relevance to, the organisation's decision-making processes.

The following section will review the reported empirical research studies in this area.

3.7.2 EMPIRICAL STUDIES: HYPOTHESIS-TESTING RESEARCH

Wilson and Peel (in Jenkins and Poole, 1990) studied 52 U.K. engineering firms, and found that those which had adopted profit sharing and/or employee participation in decision-making exhibited significantly lower absenteeism and quit rates.

Other findings supporting a hypothesised relationship between participation and employee absenteeism included those of Freeman and Medoff (1984), who determined a significant negative relationship between involvement in collective bargaining mechanisms and employee turnover. Stewart (1987) also demonstrated that voluntary resignations were lower amongst unionised employees in the U.K. than was the case for non-unionised staff members. Thus the degree of employee involvement provided by union membership and the resultant inclusion of staff in collective bargaining processes was suggested by Stewart (1987) to have reduced employee turnover.

Finally, the hypothesised role of employee decision-making participation in providing additional job security for subject staff was supported by Shearer and Steger (1975). They determined that a high level of organisational participation was a major contributor to nonobsolescence among United States

Air Force personnel.

3.8 THE LITERATURE ON OTHER EFFECTS OF EMPLOYEE PARTICIPATION IN DECISION-MAKING

3.8.1 PROPOSITIONS AND THEORY-BUILDING

Other postulated effects of decision-making participation include improved industrial relations, better quality of decision-making, and improved financial and operational performance at organisational level. This section reviews commentaries within the literature on these additional postulated effects of decision-making participation.

Improvements in industrial relations and reductions in unionism have been suggested to flow from the introduction of employee participation in decision-making. Strauss (1963) identified worker involvement as a means to achieve constructive resolution of work-place conflicts. Parker (1985) also identified these potential effects, and further suggested that some firms may have operated low-level participation programmes in part to reduce workers' interest in higher-level strategic management issues.

Commentators have further suggested that participation in decision-making can be used by management to achieve a number of organisational objectives, including the introduction of technological changes (Marrow et al, 1967). Latham and Locke (1979) and Vroom (1969) noted that participation was not only a potential motivational tool, but could also be used by management to improve the quality of work-related decision-making within an organisation. They suggested that this objective of improving the quality of employees' decisions was achieved by participation schemes through the increasing of supervisors' knowledge, as well as by improving their confidence in their subordinates.

Hill (1991) identified that many British and American companies introduced quality circles during the early 1980s, with stated objectives that went further than 'only' enhancing employee attitudes and business effectiveness. Specifically,

such schemes had been launched as a response to poor human relations and lack of competitiveness in the organisations. Subsequently such quality circles were acknowledged by the thirteen companies surveyed in Hill's (1991) study as having promoted the continuous improvement of many areas within the organisations, including cost-saving and quality control. They also identified that the quality circles had further established the commitment of firms to changing their organisational structure.

Although organisational-level improvements in productivity and effectiveness have also been postulated to result from employee participation in decision-making (Beach, 1970; Coch and French, 1948; Patchen, 1965a), many research reports in this area have been anecdotal or case-study in nature. Savage (1988), for instance, reported on the successful implementation of employee decision-making participation in the Irish Gas company, and noted increases in organisational effectiveness and efficiency. Semler's (1989) report on the successful implementation of employee involvement in Semco S/A, previously discussed in chapter 2, is another example of this descriptive type of report. Such accounts however have lacked strong empirical evidence to support their assertions that it was specifically the introduction of decision-making participation that generated the improvements in the respective firms' performances.

3.8.2 EMPIRICAL STUDIES: HYPOTHESIS-TESTING RESEARCH

This section will review the reported empirical research on the various postulated effects of decision-making participation by employees outlined in the previous section.

The suggestion that the introduction of worker participation in decision-making may result in reduced workers' interest in high-level managerial issues was supported by Drago and Wooden (1991). They surveyed nine hundred private sector employees in Australia and New Zealand and found that the introduction of formal participation programmes changed employee desires for further participation, but that these effects were different

for high- and low- level staff. Participation at higher levels increased employee demands for it, while participation at lower levels reduced demands for higher-level involvement. Drago and Woodens' (1991) conclusions from this study included a suggestion that shop-floor participation programmes may thus have favoured managerial interests, while higher-level programmes may have favoured employee interests.

Research findings in this area have not been consistent, however. Lischeron and Wall (1975), for example, found no causal linkage between the introduction of formal participation schemes and increases in employee desires for participation. Driscoll (1978), however, surveyed participating faculty members of a liberal arts college in New York, and found overall satisfaction with the organisation and specific satisfaction with the participation scheme itself. Further, the greater the congruence between desired and perceived participation, the greater was the satisfaction with both the college and with the participation programme.

Most studies into the relationship between employee participation and organisational-level performance have been conducted in cases where integrated programmes, such as full employee ownership or gainsharing, have been instituted. These studies will be reviewed in depth in chapter 5. As was noted previously however, most empirical research efforts attempting to establish relationships between employee participation in decision-making and productivity have been restricted to studying the effects on performance at employee-level. Relatively few researchers have reported attempts to establish a direct relationship between employee participation in decision-making and organisational-level performance. One can only speculate as to the reasons for this, but these may have included a perceived difficulty in controlling for exogenous factors such as business risk and volatility in the economic and political environments of the subject firms. There may also have been a tendency by such researchers to assume that enhanced employee performance automatically led to improved organisational performance.

Nevertheless a limited number of researchers have studied the relationship between decision-making participation and firm-level performance. Bradley and Hill (1987), for instance, despite their previously-reported findings of no significant improvement in employee attitudes as a result of introducing quality circles, did find an association between quality circles and improved financial returns for the firms.

3.9 THE LITERATURE ON THE EFFECTS OF EMPLOYEE PARTICIPATION IN DECISION-MAKING RELATING TO SPECIFIC WORK-ISSUES

Participation by employees in decision-making relating to specific work-issues has been investigated by a number of researchers. Miller and Monge (1986) distinguished between participation in general, or 'multiple', and specific work issues in their meta-analysis. They found that participation-satisfaction correlations differed significantly between organisational settings that incorporated perceptual measures of multiple-issue participation, and those that focused only on specific issues. The following sections will review research findings into the effects of specific types of decision-making participation, with particular emphasis on employee involvement in work-goal and budget setting.

3.9.1 THE LITERATURE ON THE EFFECTS OF EMPLOYEE PARTICIPATION IN WORK-GOAL SETTING

3.9.1.1 Propositions and Theory-building

The method by which an employee's goals should be set has been the subject of much controversy and research (e.g. Latham and Saari, 1979; Latham and Yukl, 1975). Early this century, Taylor (1911) argued that work goals should be set unilaterally by an employee's supervisor. Latterly however work-goal acceptance and employee commitment have been believed to be enhanced when such goals were set participatively (Lawler and Mohrman, 1989; Likert, 1967). Such theorists advocated participatively-set goals as these were perceived to be 'owned' by everyone in the work unit, and were typically considered achievable by all employees. Top-down goals, by contrast, were often viewed as being imposed by management, and thus lacked commitment from employees (Latham

and Locke, 1979).

3.9.1.2 Empirical Studies: Hypothesis-Testing Research
This section reviews the empirical research evidence of the effects of participation in work-goal setting.

French et al (1966) undertook one of the earliest studies into participative goal-setting, at the General Electric Company. They compared imposed and participative goal-setting for lower-level managers, and found a positive correlation between acceptance of job goals and participation in goal-setting. They commented however that while involvement in goal-setting was important in terms of improving employee attitudes and performance, it was more important that a goal be set in the first place. Lawrence and Smith (1955) had earlier reported that employee participation in work-goal setting had been associated with increased production, but that satisfaction had not significantly improved.

Steers (1976) studied the effects of decision-making participation on female first-level supervisors in an accounting and customer service department of a major public utility. He found a significant relationship between the amount of participation allowed in work-goal setting and job involvement and satisfaction.

A major research programme into work-goal setting was undertaken by Latham and Locke (1979), who reported on a fourteen-year programme of laboratory experimentation, and field studies undertaken mainly in the wood-products industry. They initially determined that the productivity of logging crews that had work-goals set for them was significantly higher than for crews without any work goals at all. They then studied the impact of participative goal-setting, by randomly assigning crews with either participatively-set goals, non-participatively-set goals, or no specific work-goals other than instructions to 'do your best'. The results, as reported by Latham and Locke (1979), were significant in that the 'participating' crews set significantly higher goals for

themselves and subsequently attained them more frequently than those whose goals were assigned by their supervisors. Workers with assigned goals were found to perform no better than those who were merely urged to 'do their best'.

Latham and Locke (1979) also reported on research comparing participative and assigned work goals for typists. This study demonstrated that the act of setting goals, whether designed or determined participatively, led to substantial improvements in typing speed. In the participating group however, the employees concerned insisted on setting very high goals, regardless of whether their previous week's goals had been attained. Latham and Locke (1979) further replicated these findings in a research study of engineers and scientists. Their conclusions again were that participative goal setting was superior to assigned goal setting, but only to the extent that it led to higher work-goals being set. Work groups in this study that were only told to 'do their best', and had no specific work-goals set for them, performed significantly worse than participative- and assigned- goal groups.

Latham and Steele (1983) investigated the motivational effects of goal-setting participation in an experiment on college students assigned to a toy assembly-line. Goal-setting participation led to performance that was significantly higher than for students who were instructed to merely 'do their best'.

Latham and Locke's (1979) laboratory experiments and field-studies produced consistent results. No significant differences were noted in the performance of subjects with assigned as compared to participatively-set goals. Nevertheless, specifically challenging goals led to significantly better performance than easy or vague goals. They also concluded that feedback to employees resulted in higher performance, but only when it resulted in the setting of higher work-goals.

Not all the results of other studies into the effects of

participation in goal-setting have agreed with those of Latham and Locke (1979). Latham and Yukl (1976) randomly assigned typists to assigned and participative work-goal setting groups, and found no significant difference in the productivity of the two groups. Latham et al (1978) undertook a similar exercise amongst engineers and scientists, and found that goal acceptance levels were not significantly different between the assigned and participative work-goal setting groups. Dossett et al (1979) also found no significant effect on performance attributable to participation. Mento et al (1987) undertook a meta-analysis on work-goal setting, and found a significant relationship between job satisfaction and participation in work-goal setting. Erez et al (1985) found significant relationships between participative goal setting, goal commitment and performance. Locke et al (1988), commenting on these findings, suggested however that the broad measurement scale used to measure goal commitment in the study may have been responsible for such significant relationships between the variables. They also suggested that the effectiveness of different goal-setting procedures may have varied, depending on the cultures of the subjects. They supported this suggestion with empirical findings of a comparative study (Locke et al, 1988) into the performance of groups of American and Israeli subjects, both of which were participating in work-goal setting. The Israeli group was found to perform more poorly under assigned goals than participative goals, and Locke et al (1988) suggested that this may have been attributable to the 'national culture' of co-operation and consultation prevalent in Israel.

Although the studies reported above have indicated a significant relationship between employees' participation in setting their work-goals and job satisfaction, Miller and Monge's (1986) meta-analysis revealed a mean-weighted correlation between such participation and employee productivity of only $r = 0.11$. They thus concluded (1986, p 748) that participation in goal-setting did not appear to have a strong effect on productivity.

3.9.2 THE LITERATURE ON THE EFFECTS OF EMPLOYEE PARTICIPATION IN BUDGET-SETTING

3.9.2.1 Propositions and Theory-building

The distinction between participation in budgeting and participation in work-goal setting is somewhat blurred. Budgets were defined by Drury (1992, p 435) as:

'plans of actions for future periods'.

They are thus not limited to being expressed in financial terms, and can be viewed as work-goals which emanate from the organisation's accounting system of information and control. Macintosh (in Emmanuel et al, 1992) noted that there was considerable enthusiasm in the early 20th century for participation as a means to optimise efficiency and effectiveness, and that it was thus no great surprise that the issue had entered the field of accounting and information systems. Many theorists have considered the effects of participative budgeting, with most (e.g. Argyris, 1952; Hofstede, 1967; Macintosh, 1992) suggesting that participative budget-setting could enhance both the attitude of participants towards budgets and the eventual achievement of these goals. Emmanuel et al (1991, p 174) stated that in the context of budgeting, the literature on employee participation appeared to reduce to three major arguments:

- participation in budget-setting helped to ensure that subordinates accepted the budget-targets and were thus motivated by them;
- participation led to better communication and thus to improved and more relevant budget standards; and
- the likelihood of information distortion and manipulation was reduced by budgetary participation.

Recently, Kren (1992) proposed that there was a positive relationship between budgetary participation and individual performance, and that this relationship was further affected by the perceived level of job-relevant information, as an intervening variable. He thus suggested that participation in budget-setting affected performance, but not directly. The provision of job-relevant information was essential for

enhanced performance to result from employee involvement. These proposals were based on the thesis that budgetary participation facilitated the acquisition and use of job-related information, which in turn helped managers to improve their decision-making by being better informed.

3.9.2.2 Empirical Studies: Hypothesis-Testing Research

Early research into the effects of budgets on people was conducted by Argyris (1952). Although not directly testing for the effects of participation in budget-setting, the study found a wide range of responses to budgets from staff at different levels in the organisational hierarchy. This led Argyris (1952) to speculate about the underlying behavioural dynamics of budgeting. He recommended participation therein as a solution to perceived budgetary problems, such as resentment, hostility and over-rigid standards, which might arise from the budgets being imposed by management rather than being set consultatively. Hofstede (1967) undertook a milestone study on the relationships between employee attitudinal variables and financial controls in an investigation of budget-induced behaviour in six large manufacturing firms in the United States. The study tested a model of the effect of participation in standard-setting, reproduced in figure 3.3. The findings were significant in that the anticipated positive relationship between participation in the budget-setting process and motivation was only identified for upper-level managers, who had participated a great deal in setting the respective budget targets. However lower-level supervisors and employees, despite having participated to a degree in the setting of technical production standards, exhibited no greater motivation to meet the targets. Hofstede (1967) noted a number of factors that potentially moderated the results across the firms, and thus could have explained these mixed results. These included differences in the roles of supervisors across the plants, and the frequency of communication and budget-related feedback between supervisors and their subordinates. To overcome such problems, Hofstede (1967) proposed a 'budgeting game spirit' as a key ingredient in creating appropriate attitudes to

budgets and motivations to achieve the budgetary targets. This involved a competition-style approach to the attainment of budget targets, with the targets being 'aimed for' for their own sake, as in the spirit of a contest.

In reviewing Hofstede's study, Macintosh (1992) concluded that participation in budget-setting appeared to be a necessary, but not sufficient, condition for motivation to achieve the budget to occur. Further recent evidence of the effects of participation in budget-setting has been provided by Searfoss

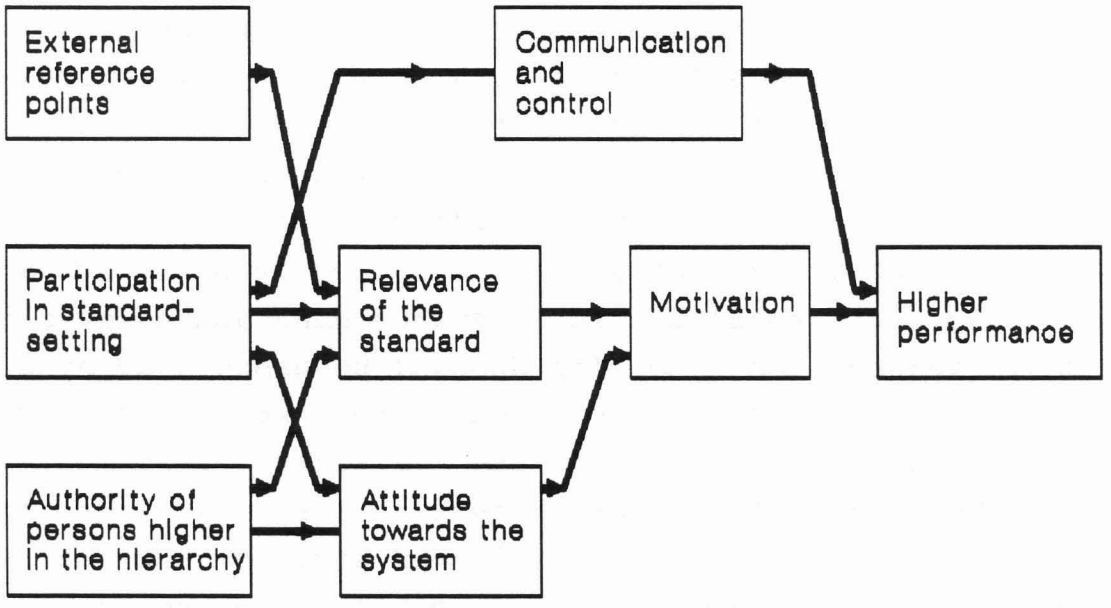

Figure 3.3: A Model of the Effect of Participation in Standard-Setting

Source: Hofstede, 1967, p 178

and Monczka (1973), who found a significant relationship between participation in the budget process and work motivation. Simons (1987) undertook a field study of the Johnson and Johnson Company, and detailed how the provision of budgetary participation led to extensive search activities by managers for job-related information. He concluded that these activities were primarily caused by the participatory nature of the budgetary process in that company.

The above studies clearly fall within the cognitive category of explanatory models of the effects of participation, due to their emphasis on the acquisition of relevant information by employees within the participation process. Other researchers have also studied the role of cognitive factors in explaining the effects of budgetary participation on attitudes and performance (e.g. Chenhall and Brownell, 1988; Locke et al, 1986; Murray 1990). Kren's (1992) study of budgetary participation in sixty three of the 'Fortune 500' manufacturing firms in the United States used path-analytical procedures to support the proposition that budgetary participation facilitated the acquisition by managers of job-information, which in turn facilitated more effective performance. Further, such information was demonstrated to be associated with improved performance. Kren (1992) commented that these findings supported the view that participatory budgeting may have positively affected performance via cognitive rather than motivational processes, i.e. performance may have been enhanced through informational understanding on the part of the managers. The study also found that 'environmental volatility' was not positively related to budgetary participation. Kren (1992, p 523) suggested that organisations may thus have failed to recognise budgetary participation as a valid means to increase the job-relevant information available to managers, to enable them to effectively deal with such volatility.

3.9.3 THE LITERATURE ON THE EFFECTS OF EMPLOYEE PARTICIPATION IN DECISION-MAKING RELATING TO OTHER SPECIFIC WORK ISSUES

3.9.3.1 Propositions and Theory-Building

Researchers have identified and studied employee involvement in a wide range of work-related decision-types. Miller and Monge's (1986) meta-analysis, for example, considered the possibility that perceived participation in specific tasks would moderate the relationships between participation and attitudinal and behavioural variables such as job satisfaction, organisational commitment and productivity. Ivancevich (1977) also proposed the involvement by employees

in a range of decision-making areas such as safety, pay and personnel policies. This was further supported by Lawler and Mohrman (1989), who advocated the participation by employees in planning activities and their focusing on future directions of the employer-firm. Lawler and Mohrman (1989), in advocating the concept of 'high-involvement organizations', stated that employees therein would often participate in the evaluation of their manager or supervisor, would decide who would join their units, and who would receive pay increments. They cautioned, however, that in traditional organisations which lacked a high-participative climate, such an approach was risky as it would threaten the traditional hierarchy and lead to managers being alienated from the concept of employee involvement.

3.9.3.2 Empirical Studies: Hypothesis-Testing Research

Miller and Monge, in their (1986) meta-analysis of the effects of employee participation in decision-making, considered whether employees' perceived participation was in respect of single work-related issues, such as goals, pay plans and job redesign, or referred to multiple issues or a general participative climate in the organisation. As stated earlier, they found a significant correlation ($r = 0.46$) between perceived participation in multiple issues and job satisfaction, and a reduced ($r = 0.21$) correlation between perceived participation in specific issues and job satisfaction. Although the size of the correlation was smaller, support therefore nevertheless existed for the proposition that participation in specific decision-making areas led to enhanced employee satisfaction and performance.

In the context of this study into participation schemes in the gold-mining industry, it therefore appeared reasonable to investigate the relationships between employees' perceived extent of participation in <u>issues of safety</u> and their attitudes and performance. A need for this investigation was indicated by Leger (1993), who reported on the mine safety management system ('M.S.M.S.') developed by the Chamber of Mines, and on the use of the system by member-mines. He noted that the M.S.M.S. was:

> '... characterised mainly by its hierarchical approach to safety and its concern with managerial control... the concern to increase productivity alongside safety to reduce losses; and the absence of provisions for worker participation' (Leger, 1993).

Leger (1993) noted that studies had shown that miners rejected complicated bureaucratic safety rules, and rather coped with danger through collective team work and solidarity.

3.10 THE LITERATURE ON THE EFFECTS OF ACTUAL VERSUS PERCEIVED EXTENTS OF EMPLOYEE PARTICIPATION IN DECISION-MAKING

3.10.1 PROPOSITIONS AND THEORY-BUILDING

Commentators and researchers (e.g. Drago and Wooden, 1991; I.D.E., 1979) have distinguished between 'de jure' and 'de facto' participation by employees. 'De jure' participation is that which is formally prescribed and which in due course becomes part of the organisational structure, while 'de facto' participation is that which is perceived to occur and thus forms part of an employee's process of decision-making. Dickson (1982, p 915) pointed out that although 'de jure' participation facilitated 'de facto' participation, involvement as a style of management could occur without being formally instituted.

3.10.2 EMPIRICAL STUDIES: HYPOTHESIS-TESTING RESEARCH

Miller and Monge (1986) divided their meta-analysis between a review of prior studies that had measured actual participation and those that had measured perceived participation. They considered whether job satisfaction was related to either perceived or actual participation, and found significant correlations in both cases. The size of the correlation in respect of the relationship between actual participation and job satisfaction ($r = 0.16$) was smaller, however than the correlations between job satisfaction and perceived participation, whether in respect of specific- or multiple-issues ($r = 0.21$ and $r = 0.46$ respectively). Miller and Monge (1986) concluded that the strongest effects of participation on satisfaction were to be found in studies of perceived

participation focusing on multiple decision-making issues. They further suggested that their findings in respect of the relationships between perceptions and attitudes provided significant support for affective models of participation.

3.11 THE LITERATURE ON THE EMPIRICAL TESTING OF EXPLANATORY MODELS OF THE EFFECTS OF EMPLOYEE PARTICIPATION IN DECISION-MAKING

Research into the effects of employee participation may be considered as having been undertaken on two levels. At the first level, researchers have undertaken empirical research into the relationships between key variables in situations with and without employee involvement. These have included laboratory studies, correlational studies, and univariate and multivariate field studies. Typically, employee satisfaction and / or productivity have been dependent variables in these studies. At the second level, researchers have reviewed groups of these prior 'first level' studies, for purposes of establishing trends and consistencies in the reported results, or for purposes of supporting explanatory models of the processes at work when employees participate in work-related decision-making. This section reviews the literature on this, 'second', level of research into the effects of employee involvement in decision-making.

The conflicting research findings regarding the effectiveness of decision-making participation have been attributed by various researchers (e.g. Cotton et al, 1988; Miller and Monge, 1986) to the mechanisms through which participation may have operated. Thus it has been suggested, according to affective models of participative effects, that participation leads to improved job satisfaction through the attainment of higher-order needs. Alternatively, cognitive models of participative effects suggest that employee participation increases satisfaction and productivity through the flow and use of important organisational information. Contingency models of participative effects suggest that employee involvement will impact differently on satisfaction and productivity for different staff and situations.

Based on these propositions, Cotton et al (1988) suggested that the conflicting and ambiguous reported outcomes arising from participative programmes may indeed have arisen from very different processes. The following sections will evaluate the prior research into the effects of decision-making participation in terms of the extent of support provided for each of Miller and Monge's (1986) categories of cognitive, affective and contingency explanatory models of participative effects.

3.11.1 EMPIRICAL SUPPORT FOR COGNITIVE MODELS OF PARTICIPATION

Cognitive models of participation predict (Miller and Monge, 1986, p 732) that employee involvement in decision-making will have a stronger positive influence on both their productivity and job satisfaction, when they are involved in the making of decisions about which they have specific knowledge. Further, cognitive models predict (Miller and Monge, 1986 p 744) that the effect will be greater on productivity than on job satisfaction. This is because the cognitive models suggest that there is no direct effect of participation on job satisfaction, but rather there exists an indirect effect, with productivity operating as an intervening variable.

Miller and Monge (1986) found that the effects of participation (other than in goal-setting) on productivity were stronger ($r = 0.27$) than the effects of actual participation on satisfaction ($r = 0.16$), and stronger than the effects of perceived participation for a single variable on satisfaction ($r = 0.21$). While cautioning against drawing firm conclusions from a comparison using different dependent variables, Miller and Monge (1986) noted that the moderately stronger correlations between participation and productivity, compared to those between participation and satisfaction, were consistent with the proposition that productivity was an intervening variable in the relationship between participation and satisfaction. These findings, they suggested, thus provided a degree of plausibility for cognitive models. Further support for cognitive models of participative effects has been provided by the research undertaken into the effects

of budgetary participation, as discussed in section 3.9.2.2, above.

3.11.2 EMPIRICAL SUPPORT FOR AFFECTIVE MODELS OF PARTICIPATION

Affective models of participation predict that working in a participative climate will have a substantial enhancing effect on employees' attitudes and productivity, by the attainment of high-order needs such as self-expression, respect and equality. Miller and Monge (1986, p 744) suggested that their meta-analysis data was consistent with an affective explanation of participation effects, when such participation involved multiple decision-making. They concluded that working in a participative climate was strongly related to satisfaction at work. The stronger correlations between job satisfaction and perceived participation, as opposed to those between job satisfaction and actual participation, as previously discussed in section 3.10.2, lent further support to the explanatory power of such models.

3.11.3 EMPIRICAL SUPPORT FOR CONTINGENCY MODELS OF PARTICIPATION

Miller and Monge (1986) were unable to find support for contingency-model predictions of the effects of decision-making participation in their meta-analysis. They were only able to test for the moderating effects of job-type and organisation-type on the effects of participation on job satisfaction and productivity. They concluded that the effectiveness of participation did not differ for employees at different levels in an organisation, or between different firm-types. They acknowledged, however, that their meta-analytic methodology had several limitations, including a concentration on the analysis of only bivariate relationships. Apart from job-type and organisation-type, Miller and Monge (1986) had been unable to isolate and test further potential moderating variables. Thus they commented (1986, p 748) that the lack of specific support for contingency approaches did not indicate that such models should be rejected. Rather, they recommended that subsequent researchers should extend their consideration of potential moderator variables. The following

section will consider recently-reported research into such moderating factors on the effects of decision-making participation.

3.12 THE LITERATURE ON POTENTIAL MODERATORS OF THE EFFECTS OF EMPLOYEE PARTICIPATION IN DECISION-MAKING

This section provides an overview of the literature on potential moderators of the effects of employee participation in decision-making. A detailed review of this topic will be presented in chapter 7.

3.12.1 PROPOSITIONS AND THEORY-BUILDING

Cotton et al (1988) proposed the examination of contingency variables associated with the effects of participation. They suggested, for example, that the nature of the decision in which an employee participated, or his personality characteristics, might be potential moderators of the effects of decision-making participation on job satisfaction and / or performance. Other potential moderators of the effects of employee involvement have been identified by various commentators and researchers. These included the nature of the participation scheme (Cotton et al, 1988), and the perceived relevance of the decision concerned to an employee's work responsibilities, noted by Porter et al (1975). They suggested that group participation would only be effective if the topic of participation itself was relevant to the work concerned. Participation in task-irrelevant issues was thus unlikely to affect work productivity significantly. French et al (1960) suggested that irrelevant participation might indeed detract group members away from critical work issues and possibly even lower their productivity. This point was also emphasised by Coldwell (1992), in the South African context. He suggested that South African employees were becoming increasingly sceptical of participation programmes and managements' intentions in relation thereto. As a result, workers would be seeking more significant and relevant participation, as well as greater material rewards for their efforts.

3.12.2 EMPIRICAL STUDIES: HYPOTHESIS-TESTING RESEARCH

By their own admission, Miller and Monge's (1986) meta-analysis was somewhat limited in testing for situational moderator variables on the effects of participation. They were able to consider only types of occupation and kinds of organisations as potential moderators, and found that these were not significant moderators. They were unable to test for the moderating effects of employees' personalities or other variables such as perceptions of the organisations' budgetary system of control. Wagner and Gooding (1987), however, specifically tested in a meta-analysis for the moderating effects of firm size, task interdependence, task complexity and performance standards on participation-outcome relationships. They found that these factors did not significantly moderate the effects of participation.

In their review of empirical studies on employee participation, Cotton et al (1988) demonstrated that the effects of participation on satisfaction and performance varied according to form. Using a six-dimensional classification system (participation in work decisions; consultative participation; short-term participation; informal participation; employee ownership; representative participation) they found that different forms of participation in decision making were associated with markedly different outcomes. This led Cotton et al to suggest that participation was a multi-dimensional or multi-form concept (1988, p 16).

White (1979a) hypothesised that individual employee factors such as tenure, level of education, values, religion and biographical items such as age, marital status and sex would not be consistent moderators across sites of the relationship between participation in decision-making and employee attitudes. He tested whether seventy three potential moderators were situation-specific across fourteen research locations. He found that the moderating effects were inconsistent and small, and could not be generalised across the research sites.

3.13 THE LITERATURE ON OTHER ISSUES REGARDING THE EFFECTS OF EMPLOYEE PARTICIPATION IN DECISION-MAKING

Kelly and Kelly (1990) noted that the causal direction of effect was not always clear in cross-sectional studies. They pointed out that such studies could not clarify whether participation encouraged more positive attitudes towards them or whether positive attitudes encouraged participation.

Cross-sectional research also lacks rigour in its failure to analyse the effects of participation over time. Marks et al (1986) attempted to address this shortcoming and determined minor but statistically significant improvements in productivity, absenteeism and reductions in intentions to quit among quality circle members over a two-year period. Griffin (1988) undertook a longitudinal study over a three-year period and determined that quality circle members' job satisfaction and involvement were improved. However both effects declined after eighteen months and totally disappeared after the three-year period. This raised the interesting question of how participation schemes may lose their effectiveness over a period of time.

Hill (1991) identified a limitation in research on participation in quality circles in the effective self-selection of participants. Any observed differences between members and non-members of such circles may, he observed, have been due to prior differences which may have influenced some employees to put themselves forward for membership. Reported results of such programmes may therefore not have been due to the effects of the circles themselves.

3.14 IMPLICATIONS FOR THIS STUDY

Major implications for this study from the preceding review were effectively identified by Cotton et al (1988), who suggested that the conflicting results of empirical studies into participation indicated that it was a multi-dimensional or multi-form concept. They suggested that additional research into the effects of participation should acknowledge different outcome variables, and the separate models and theories of the

effects of participation. They stated that to understand even one form of participation in depth would demand consideration of antecedents, consequences, mediating processes and contextual contingencies.

Miller and Monge's (1986) classic meta-analysis of research into the effects of participation schemes investigated bivariate relationships between participation, satisfaction and productivity. However they also acknowledged that the affective, cognitive and contingency explanatory models of participative effects were in fact much more complex than simple bivariate relationships.

There thus appeared to be a strong case for the development and testing of a complex multivariate perception model of participation in decision-making, incorporating a number of hypothesised moderator variables. Schuler (1980) recommended such a research strategy, utilising independent measures of variables and a longitudinal format to detect the effect of participation schemes over time.

3.15 CONCLUSION

This chapter has provided an in-depth review of the theory of, and empirical research into, the effects of participation in decision-making participation by employees. The analysis has included a review of the postulated effects of participation in specific areas of work-related decision-making, and an acknowledgment that various individual employee and organisational variables may moderate the effects of decision-making participation. The extant research literature was then evaluated in terms of the support provided for cognitive, affective, and contingency explanatory models of the effects of employee involvement in decision-making. The objectives of this chapter have thus been achieved, and the following chapter will extend this review by surveying the literature on financial participation by employees.

CHAPTER 4

FINANCIAL PARTICIPATION BY EMPLOYEES: A THEORETICAL AND EMPIRICAL REVIEW

4.1 INTRODUCTION

Following the detailed review of the literature on the effects of employee participation in decision-making in chapter 3, the main objective of this chapter is to provide a similar review in respect of the various forms and effects of financial participation by employees.

Chapter 2 provided a general overview of the literature on employee participation, and distinguished between the various approaches to the topic. It also reviewed the various forms of participation, and the hypothesised effects of such schemes on employee attitudes and performance. This chapter focuses on financial participation as a specific sub-section of employee participation schemes, and the literature on the effects thereof.

In achieving the main objective of the chapter, the following sub-objectives will be addressed:

- specific variates of result-based remuneration plans will be identified and discussed;
- commentators' postulations and theory-building on the specific effects of result-based payment plans on employee response variables will be reviewed;
- the empirical research findings relating thereto will be reviewed; and
- various caveats and preconditions that commentators and researchers have identified regarding the implementation of such plans will be discussed.

The chapter will conclude with an assessment of the need to adopt a contingency approach in the design and implementation of an organisation's system of remuneration and reward. Arising therefrom, specific implications for this study will be identified.

The chapter will deal with the above sub-objectives in sequence. Having provided an in-depth review of employee involvement in both decision-making (chapter 3) and in the financial performance of the organisation (chapter 4), the foundations will have been laid for a review of research into the effects of integrated programmes of financial and decision-making participation, which will be the subject of chapter 5.

4.2 THE ROLE OF FINANCIAL PARTICIPATION PROGRAMMES

Locke identified money as:

> '... the crucial incentive because, as a medium of exchange, it is the most instrumental and is used to purchase numerous other values' (1983, p 77).

Hegewisch stated that:

> '... the pay package is the most obvious and visible expression of the employment relationship; it is the main issue in the exchange between the employer and the employee, expressing the connection between the labour market, the individual's work and the performance of the employing organisation itself' (1991, p 28).

Thus financial participation has been viewed as both a sub-section of employee participation schemes, and as a potential constituent of the remuneration and reward policies of organisations. Such participation programmes have been postulated by many researchers (e.g. Bell and Hanson, 1987; Blanchflower and Oswald, 1987a; Estrin et al, 1987) to impact on human resource management objectives and outcomes. Beardwell and Holden (1994) commented that the modern trend towards human resource management had corresponded with the introduction of new concepts in reward management, with particular emphasis on performance-reward schemes. Such schemes may be individual-, reward-, or group-based. Beardwell and Holden (1994) suggested that, due to the ever-increasing competitive pressures on organisations, management had continually sought greater effort and performance from their employees. This had frequently entailed the setting of

performance targets above previously-established standards, or the reducing of labour costs, and the provision of financial rewards for the attainment of such targets.

Poole and Jenkins (1991) stated that in the preceding few years, schemes for increased employee financial involvement had undergone a surging popularity in Britain and other countries. Thomson (1992) forecast that financial participation, with particular emphasis on the gainsharing form, was also likely, within five years, to become widely accepted and adopted in South Africa.

4.3 THE LITERATURE ON THE USE OF PAY AS AN INCENTIVE FOR EMPLOYEES: THEORETICAL PERSPECTIVES

This section provides an initial overview of the literature on the use of contingent financial rewards as means by which organisations may motivate their employees. Commentators have identified money as a means of satisfying a number of different employees' needs: short term material enjoyment, long term security, social status, and recognition of personal achievement. It is no surprise, therefore, that financial gain has been proposed as an incentive for motivation purposes. Indeed, Child (1984) pointed out that pay had frequently been used by organisations to that end, because it could easily be differentiated and computed, and also lent itself to be linked clearly and visibly to desired performance. Pay has further been identified as a valued reward by staff at all levels of the organisation's hierarchy. Greenberg and Liebman (1990), for instance, suggested that by matching the right incentives with the individual managers of a firm, the talents of such executives could most effectively be tapped.

Beardwell and Holden (1994) argued that all payment-by-result systems of remuneration reflected the traditions and principles of 'scientific management'. Such principles were championed by Taylor (1911), who analysed and standardised work activity through the use of time-and-motion and work-study techniques. Taylor contended that workers were only interested in higher wages and the opportunity to gain such

extra pay, and thus concluded that money was the only incentive appropriate in the work-place.

Fossum (1979) suggested that contingent rewards must be reinforcing if employees' behaviour, and not just their attitudes, were to be affected by such schemes. He emphasised that financial rewards were not necessarily reinforcing, but if they were, one would have expected specific payment structures to have resulted in simultaneous improvements in both performance and satisfaction. Mawhinney (1975, p 705) commented that, in this context, contingent financial reward schemes could be utilised as functional tautologies to classify employee outcomes in terms of their effects on satisfaction.

Having identified the potential value of contingent financial rewards on employees' motivation and performance, the following section will review specific variations of result-based remuneration policies. In so doing, special attention will be paid to group-based bonus schemes, where such bonuses are based on the achievement of targets for organisation-level profits or cost-savings. As will be reported in detail in chapter 10, it was this form of employee financial participation that had been instituted at the subject mine, and which was therefore the focus of this research study.

4.3.1 RESULT-BASED PAYMENT PLANS: EASTERN AND WESTERN APPROACHES

This section reviews the literature on result-based plans of contingent remuneration for employees. The various categories of such plans are discussed, and specific variates of group-based plans, which are based on profits or cost-savings achieved at organisational level, are reviewed.

Thomson (1992) suggested that there were two ways to conceptualise the introduction of result-based remuneration schemes on a macro-economic level. He identified two primary approaches: Western and Eastern. These, he maintained, were

clearly distinguishable by the differing corporate structures in each. Under the Western model, the relationship between shareholders and management was conceptualised in 'agency theory'. This, Thomson (1992) stated, suggested that the directors of the company were agents of the shareholders and derived their powers from this relationship, including the powers to employ and remunerate at all staff levels below their own. Such management teams probably enjoyed their own separate incentive scheme, but would nevertheless negotiate contracts of profit-sharing or other types of financial participation with the workers. Thomson (1992) suggested that management did not have to gain the approval of the shareholders for such contracts, because by definition it was only the 'gains' that were being shared.

The second, Eastern, approach was typified, Thomson (1992) stated, by the Japanese management model, in which there were essentially only two stakeholders - shareholders and employees (management were deemed to be part of the work force in this model). Under this approach, wages were fixed at a minimum level in accordance with negotiations with trade unions, but regular and substantial profit-shares were paid, the sizes of which were dependent upon the achievement of pre-set profit targets. All parties shared in such distributions, which were made transparent to external scrutiny. However Thomson (1992) commented that this 'Eastern' model was seldom seen in South Africa.

Horwitz (1988) explored some of the problems and issues associated with the 'stakeholder perspective' to the introduction of employee financial participation in South Africa. He noted, that in the case of the country's mining industry, trades union tended to emphasise their demands for a 'living wage' for their members, and had displayed little enthusiasm for financial participation. He also suggested (Horwitz, 1988 p 8) that there was, within union circles:

> '... a belief of the irreconcilability of certain interests and an associated fear of co-option arising from a loss of independence and potential

fragmentation of the worker power base; and the rejection of the mechanisms entrenching capitalism.'

Horwitz (1988) also referred to studies of alternative forms of work organisation in other African states such as Algeria, Tanzania and Zambia. He noted that efforts to introduce financial participation in those countries had been relatively unsuccessful. This was attributed (Horwitz, 1988 p 8) to the priority afforded by workers in those countries to 'hygiene factors' such as material rewards and job security. If these primary concerns were ignored, Horwitz (1988) suggested, then financial involvement initiatives could not be expected to succeed.

Chetty (1994) noted that, within the United States and the United Kingdom, the 1980s were a decade of stagnation in the area of worker participation in decision-making. Instead, with the domination of the conservative policies of Reaganism and Thatcherism, there was a rapid rise in management- and employer-initiated forms of financial participation such as the 'People's Capitalism' scheme and E.S.O.P.s. The extent of this growth was documented by Casey et al (1992), who reviewed remuneration practices in the United Kingdom, and ascertained that 60% of organisations surveyed had individual bonus plans.

4.3.2 VARIATES OF RESULT-BASED PAYMENT PLANS

Casey et al (1992) categorised incentive-based payment systems into four broad groups:

- bonus schemes which directly rewarded an individual for his performance, such as piece-work systems, output, commission or target-based bonuses, and day-work schemes;
- collective bonus schemes, where the payments were based on the output or productivity of a group within the company, or on such measures for the entire company;
- collective bonus schemes, where the payments were based on profits generated. Profit-sharing and employee share-option schemes fell within this category; and
- schemes where an individual's remuneration was determined according to his or her performance. Such plans are

usually referred to as merit-pay or performance-related pay schemes.

The specific category of result-based financial incentive schemes of interest to this study, is the collective bonus scheme, where payments made to employees are based on profits generated. Accordingly, the following section will review this category of incentive in greater detail.

4.3.3 COLLECTIVE BONUSES BASED ON PROFITS GENERATED

Beardwell and Holden (1994) differentiated between schemes based on the performance of a particular group or department of an organisation, and those schemes which were based on the productivity of the entire organisation. Departmental bonus schemes which were based on the discrete performance of a particular work group were, they suggested, designed to encourage flexibility and cooperation between members of the respective groupings. Daniel and Mcintosh (1972) suggested that such schemes were most effective when they could be broken down into specific work groups, whose performance could be directly measured.

Plant or company-wide bonus schemes are thus intended to:

> '.. foster cooperation between all parts of the organisation so that corporate objectives may be better achieved ... their motivational appeal is to the socially integrative rather than the self-assertive tendencies in human behaviour' (Wilson et al, 1982 p 321).

Within this category of 'collective bonuses based on profits generated', two further sub-categories were identified by Beardwell and Holden (1994). These were schemes which directly rewarded, by cash payments, the attainment of profit- or cost-saving targets, and those that were non-cash-based profit-sharing schemes such as E.S.O.P.s. These sub-categories will be separately reviewed in the following two sub-sections of this chapter.

4.3.3.1 Profit-Sharing and Cost-Saving Schemes

A recent study (I.D.S. Study 520, 1992) estimated that in 1992 there were in excess of 750,000 participants in approximately 3,000 profit-sharing schemes in the United Kingdom. This represented a virtual eight-fold increase in the number of participants over a decade, and was attributed by the study to the advent of the 'enterprise culture' of the 1980s and to the encouragement of wider share ownership by the Conservative government.

However a tendency has been recently identified for firms to reward the achievement of cost-saving targets rather than the attainment of profit-goals. Indeed, the Industrial Review and Report Number 332 (1984) identified that the contraction of product-markets and decreases in production capacity in certain industries had caused organisations to switch from rewarding increases in output or profits, to rewarding lower costs of production (1984, p 2). This observed trend was relevant to this study, as the financial bonus scheme in operation at the subject mine effectively rewarded the attainment of reduced operating costs, rather than the achievement of pre-set profit-targets.

4.3.3.2 Non-Cash-Based Profit-Sharing Schemes

Grayson (1984) suggested that as new technology was rapidly replacing the necessity for manual work, individual employee contributions and work would be less recognisable. This statement implied that the ability of employers to systematically reward individual effort might diminish over time. This may explain the growing popularity of non-cash based remuneration incentive schemes. Such schemes include:

- share-trust schemes, within which companies are permitted to distribute shares to employees free of charge. Firms may periodically pay funds into a trust which in turn uses the money to purchase shares in the company. The 1978 Finance Act instituted such a system in the United Kingdom; and
- share-option schemes: these may appear in a number of different formats. In the United Kingdom, for instance,

two distinct options are provided for by legislation - the 'Save As You Earn' schemes provide employees the opportunity to save a fixed amount per month for five years and thereafter grant the option to purchase the shares in the company at a special price, which is set at the commencement of the plan.

'Discretionary' share option schemes in the United Kingdom involve the granting of options on shares, with profits usually exempt from taxation. Such schemes are discretionary in so far as the company is not obliged to grant such options to all categories of employees.

The popularisation of share ownership in the U.K. has been largely linked to the privatisation of state-run companies. Cowley (1992, p 106) stated that by 1986 1.5 million employees had benefitted as a direct result of such equity participation schemes. He suggested that such schemes may have been a step towards bridging the gap between labour and capital, created by employees' perceptions that the profit motive was exploitative, and by management's perception that it was essential for wealth generation.

4.4 THE LITERATURE ON THE EFFECTS OF RESULT-BASED PAYMENT PLANS

This section reviews the extant literature on the effects of result-based contingent remuneration systems. The review will follow the format adopted in chapter 3. The literature will be divided into relevant topics (being the effects on: employees' attitudes and motivation, their performance, and other outcome variables). Each topic's relevant literature will then be reviewed, firstly in respect of propositions and theory-building, and secondly in respect of reports of empirical hypothesis-testing research.

The most significant postulated effects of financial participation programmes are similar to those reviewed in respect of decision-making participation: an enhancement of employee attitudes and performance, and thus, indirectly, an

improvement in organisational results. However neither financial participation schemes nor the belief that they will lead to better economic performance are new ideas. For instance in the late nineteenth century W.S. Jevons stated that:

> '.. the sharing of profits is one of those apparently obvious inventions at the simplicity of which men will wonder in an after-age' (Jevons, 1883).

The literature has identified a number of purported objectives of result-based payment plans. Millward et al (1992) suggested that such systems were used by management as an alternative to light monitoring and supervision. Such an indirect increase in management control, via the introduction of such involvement schemes, was consistent with the principles underpinning Porter and Lawler's (1968) model, as discussed in chapter 3.

Child (1984) argued, however, that result-based plans actually increased employees' discretion, and that:

> '... they can legitimately ask management to leave them alone to get on with their work as they see fit on the grounds that they will be the first to suffer if a high level of output is not attained' (1984, p 193).

Employee profit-sharing and share-ownership schemes have been encouraged by the governments of the United Kingdom and the United States on the grounds that employees feel a greater sense of involvement and satisfaction leading to tangible gains in profitability and productivity (Hanson and Watson, 1989; La Mantia et al, 1990). Further, observers such as Meade (1986a) have argued that the introduction of profit-sharing should also have a positive macro-economic effect on employment, and should therefore be encouraged by the State.

Beardwell and Holden (1994) noted that such plans should also have the objective of achieving higher earnings from the workers' perspective, and most importantly that such plans

should create a joint appreciation of the necessity to increase profits, so that both the company and the workers benefit (1994, p 517). Benefits for employees have indeed been shown to include such financial gains. Cable and Wilson (1989), for instance, stated that workers' earnings were on average some 4.4% higher in profit-sharing firms, compared to the wage-levels in firms that did not provide financial participation.

4.4.1 THE LITERATURE ON THE EFFECTS OF RESULT-BASED PAYMENT PLANS ON EMPLOYEES' ATTITUDES AND MOTIVATION

4.4.1.1 Propositions and Theory-Building

Beardwell and Holden (1994) stated that profit-sharing schemes attempted not only to increase awareness and interest, on the part of employees, in the performance of the employer-organisation, but also to establish an impression of ownership of the business. A sense of cooperation between management and the work force should thus have resulted from financial involvement, and any remnants of a 'them and us' syndrome between these parties should have been eliminated. Such schemes should thus help, from a managerial perspective, to minimise wage claims and prevent disruptive industrial action. Indeed, profit-sharing schemes have often been viewed as a means of reducing the role and therefore the need for trades union (Beardwell and Holden, 1994 p 523).

Whatever management's motivation may actually have been for introducing employee financial involvement, the existence of a profit-sharing agreement should encourage labour to be responsive to the performance of the company, and thus assist in ensuring its ongoing survival. This is particularly relevant for the gold-mining industry, which was the subject of this study. Marginal gold-mines are particularly exposed to the vagaries of the international market-determined gold-price, and are typically threatened by escalating working-costs and poor ore-grades. The negotiation with trades union of a relatively lower basic wage, linked to profit-sharing, may thus assist in ensuring the survival of such mines.

A factor identified by researchers as affecting the attitudinal effects of financial participation has been the perceived size and materiality of the financial benefit. This would appear to be consistent with Vroom's (1964) expectancy theory approach, in that the 'valence', or worth, of the financial incentive may be a prime determinant of employees' motivation. This was supported by Blanchflower (1991), who observed that the average payment under a typical British sharing scheme was relatively small, and would therefore seem unlikely, a priori, to have a large motivational effect. Kelly and Kelly (1990) also pointed out that in the United Kingdom, the benefits resulting from shareholding and profit-sharing schemes have usually amounted to typically only 2-4 per cent of an employee's total pay.

Ramsay et al (1992) considered why the attitudinal effects of share-option schemes were minimal. They concluded that the insignificant size of the contribution levels and consequent bonuses were insufficient to trigger an 'ownership' effect. They also concluded that work-based attitudes were complex and a single financial bonus was unlikely to significantly impact on such attitudes. They also noted seemingly contradictory attitudes arising within different workforces, in response to result-based bonus schemes.

Duncan (1988) suggested that further potential demotivating characteristics of financial participation included: the possible lack of any direct connection between a worker's performance and overall company profits, the firm's transfer pricing policies, overhead-allocation practices which may have arbitrarily affected profit-shares, and external factors over which employees had no control.

Luther and Keating (1992) cautioned that profit-related pay may in fact lead to a widening of the gap between management and employees, rather than a closing thereof as intended. This may be caused by such factors as a distribution of the bonus on a pro-rata basis. Under such an arrangement, higher income

UKZN WESTVILLE LIBRARY

groups might receive a bigger bonus thus perpetuating, in the eyes of the lower income groups, existing injustices.

Some commentators have regarded the above issues as providing persuasive arguments against profit-participation or cost-containment schemes. Jensen and Meckling (1979) argued, for instance, that as profit-sharing was a reward for group activity, it diminished individual incentives while increasing peer-group monitoring costs. This was a particularly relevant point for this study, given the method of computing and distributing the cost-containment bonus at the subject mine, which will be detailed in chapter 10.

4.4.1.2 Empirical Studies: Hypothesis-Testing Research

This section reviews empirical research studies, reported within the literature, into the effects of result-based payment plans on employees' attitudes and motivation.

Several researchers (e.g. Long, 1978a, 1979, and 1982; Poole and Jenkins, 1988; Russel et al, 1979) have investigated whether the extent (actual or perceived) of financial participation has affected employee attitudes. However, as was the case with similar research undertaken into the effects of decision-making participation, discussed in chapter 3, the reported results have been ambiguous. Hammer et al (1982) and Long (1978a) reported positive relationships between financial participation, employee attitudes and work commitment. Rosen and Klein (1983) suggested, however, that such improved attitudes were dependent upon firm-specific conditions, such as the nature of the industry and the size of the organisation. This led Rosen and Klein (1983) to suggest that a contingency approach to the design of bonus-based remuneration systems was appropriate.

The impact of financial participation on employee involvement, organisational identity, satisfaction and commitment was also assessed by Poole and Jenkins (1991). A significant relationship between profit-sharing and employees' identification with shareholders' interests was reported. This

95/01938

was a more positive finding than that of Blanchflower and Oswald (1987a), who had suggested that profit-sharing had only a small but significant effect upon employees attitudes to their work. Ramsay et al (1992) reported on a range of surveys undertaken into employee share-ownership in the United Kingdom. They had hypothesised that employee shareholding schemes would possess transformative properties, the key to which rested in ownership and its presumed effects upon employee attitudes and consequent performance. They however found that attitudinal differences between participants and non-participants in these schemes, across a wide range of criteria, were marginal and occasionally barely discernable. Somewhat depressingly for the advocates of financial participation, Ramsay et al (1992) concluded from their results that employee participation in 'Save As You Earn' share schemes tended to be based on perceived financial opportunism, rather than on any feelings of organisational identification or commitment.

4.4.2 THE LITERATURE ON THE EFFECTS OF RESULT-BASED PAYMENT PLANS ON EMPLOYEES' PRODUCTIVITY AND PERFORMANCE

4.4.2.1 Propositions and Theory-Building

This section reviews the development of theory and propositions regarding the effects of result-based remuneration plans on employees' productivity and performance.

Many commentators have suggested that financial participation should lead to enhanced levels of employees' productivity and performance. Barnett (1978) suggested that profit-sharing:

> '... will help to improve efficiency and productivity and, therefore, the effectiveness of the corporate sector as a whole".

Hanson and Watson (in Jenkins and Poole, 1990) suggested, however, that any relationship between profit-sharing and improved performance might be contingent upon the moderating impact on other specific factors, such as industrial relations practices. Hanson and Watson (1990) stated that even empirically-determined relationships between profit-sharing

and superior performance might be due to external factors such as managerial practices and the industrial relations climate. This, Hanson and Watson (1990) suggested, lent support to the adoption of a contingency approach in evaluating the effects of financial participation schemes.

Semler (1989) in his review of the comprehensive, integrated, participation schemes in operation at Semco S/A identified a number of factors that he felt contributed to a successful profit-sharing element of the programme. These were: lower employee turnover, competitive pay, absence of paternalism, management's refusal to give 'consolation prizes' when profit-targets were not achieved, frequent profit-share payouts, and the provision of forums for employees to question managerial decisions that affected future profits. The most important factor identified by Semler (1989) however, was the provision of information to employees, in the form of short, frequent reports on the company's financial results. All of Semco's employees were provided with special tuition in the comprehension of financial data. Semler (1989) suggested that profit-sharing had an excellent chance of working when it crowned a broad programme of employee participation, when the criteria for profit-sharing were clear and simple and when corporate financial information was made available to the employees. As most of these elements were present in the subject mine of this research study, Semler's (1989) suggested criteria were therefore of substantial relevance in the consideration of the research design (see chapter 10).

4.4.2.2 Empirical Studies: Hypothesis-Testing Research

This section will review the empirical evidence regarding the effects of result-based financial participation on employees' productivity and performance.

Although employers and managers have been generally supportive of the principles of financial participation, there is little overwhelming empirical evidence that such schemes lead to any marked improvement in the performance of employees. As early as 1959, Behrend stated that there was a dearth of empirical

evidence supporting the assertion that payment-by-result systems raised labour effort and maintained it at a high level (Behrend, 1959). Many studies have been undertaken in subsequent years, which have tended to suggest that the relationship between employee effort and financial reward is not a simple one. Studies by Cherrington and others in the early 1970s (Cherrington et al, 1971; Cherrington, 1973; Scott and Cherrington, 1974) were all aimed at exploring the effects of contingent rewards on performance and satisfaction. The studies ascertained that satisfaction was greater for subjects who were rewarded than for those not rewarded, but that positively contingent rewards improved performance more than negatively contingent outcomes. Greene (1973) determined a relationship between workers' performance, merit pay and satisfaction, but was unable to ascertain a significant relationship between job satisfaction and the workers' subsequent performance. This suggested, Greene (1973) stated, that the contingent reward, rather than performance, was the cause of the workers' satisfaction.

Fossum (1979) undertook a laboratory experiment employing a random bonus allocation, and found satisfaction among the subjects, but not their performance, to be a function of the magnitude of the contingent reward. Further, expectations among the subjects were influenced by the receipt of the reward, and not by their performance. Although achieved under highly-controlled experimental conditions, Fossum's (1979) results would appear to support the propositions that there are relationships between employees' ability and their performance, between their performance and their subsequent performance, and between contingent financial rewards and their job satisfaction.

Estrin et al (1987) undertook an analysis of reports on the effects of profit-sharing and employee shareholding schemes within Europe. They reported significant positive associations between total productivity and the extent of such employee financial involvement, and concluded that most studies of the

effects of profit-sharing did suggest that it led to raised levels of worker productivity (1987, p 50).

Several studies have indicated that there are a number of intervening or moderating variables in the relationships between financial reward, employee motivation and performance. As early as the 1950s (Roy, 1952) it was suggested that the perception by workers of the rules and procedures of the payment system would play an important intervening role in the financial reward - employee outcome relationships.

Schuster (1984) suggested that the form of bonus distribution might play a moderating or intervening role. He researched the effects of gainsharing plans, and found that two-thirds of the surveyed firms used a system of plant-wide distribution of bonuses, with the balance distributing on a work-group basis. Productivity improvements were noted however to occur mainly in firms which distributed bonuses on a plant-wide basis. Schuster (1984) concluded that a plant-wide distribution scheme was therefore preferable to group-based distribution, possibly because feelings of inequality were created on a work-group system, when different members of staff received different payments.

Cable and Wilson (1989) found that staff in British engineering firms that had introduced profit-sharing were more productive than employees in similar non-profit-sharing organisations. They argued however that this was not a simple relationship, and that the effects of profit-sharing were interrelated with other managerial policies, including technological, organisation and labour practices. London and Oldham (1977) undertook an experiment with 70 students to ascertain the effects of different group and individual incentive plans. They found that the work-targets and subsequent performance levels were highest and increased most when pay was contingent solely on individual performance, rather than work-group performance. They thus concluded that the effects of group incentive plans on performance levels may have been moderated by the performance of other workers.

4.4.3 THE LITERATURE ON OTHER EFFECTS OF RESULT-BASED PAYMENT PLANS

4.4.3.1 Propositions and Theory-Building

Poole and Jenkins (1991), in a review of research findings in the areas of profit-sharing and employee shareholding schemes, found, in addition to the previously-discussed effects on employee attitudes and performance, that there were a variety of possible consequences. At organisational level, they found that a wide range of studies (the majority being from the United States) pointed to a link between profit-sharing, share-ownership schemes and financial performance - in terms of profitability and productivity. They also noted varied impacts on industrial relations in the surveyed organisations, with some studies (e.g. Long, 1978b) suggesting that employee ownership reduced conflict; and others such as Meade (1986a) suggesting that profit-sharing had actually increased it. Thus various researchers have tested for, and found varying degrees of support for, propositions that financial participation's effects go further than the enhancement of attitudes and performance at the worker-level.

The additional postulated effects of result-based financial incentive schemes thus include improvements in performance at the level of the organisation, and improvements in labour-relations indicators such as turnover and absenteeism. A final effect of financial participation schemes, as suggested by Peel et al (1990), was a significant increase in employees' financial awareness.

4.4.3.2 Empirical Studies: Hypothesis-Testing Research

This section reviews the empirical findings within the literature, regarding the additional postulated effects of result-based financial incentives identified above.

Gerhart and Milkovich (1990), using longitudinal data on some 200 United States organisations, found that contingent pay had a beneficial effect on organisational performance. Hanson and Watson (1989) examined 382 United Kingdom listed companies of which 197 had instituted profit-sharing schemes, to ascertain

whether any significant improvement in performance was evident in those companies operating such schemes. Using regression techniques, they demonstrated that profit-sharing firms outperformed similar non-profit-sharing companies to a significant extent. This study was particularly valuable in that it found consistent positive results in regressions of profit-sharing with a range of different dependent variables. These dependent variables included: changes in return on equity, return on sales, sales growth, and returns to investors.

Further evidence of positive associations between financial participation and organisation-level performance was provided by Cable and Wilson (1989), in a profit-participating survey of 52 British engineering firms. They reported that return on capital employed was more than doubled for 'participating' firms.

The literature does not, however, unequivocally support the hypothesis that management has the power to influence organisation-level performance through contingent reward schemes. Contrary evidence has been forthcoming from research by Pearce et al (1985), who studied the effects of linking managerial pay to organisational performance in the United States Social Security Administration. They found that the merit pay programme had no statistically significant effect on organisational performance. Further negative findings were provided by Bloom (1986), who surveyed 609 organisations with E.S.O.P. plans, and concluded that the plans had no significant impact on economic performance.

Hanson and Watson (in Jenkins and Poole, 1990), in a survey of 414 United Kingdom companies, discovered a correlation between profit-sharing and superior organisational performance, while acknowledging that the observed improvements may have been due to a number of uncontrolled external factors (p 180).

Differing results have been obtained by researchers investigating the relationship between labour turnover and

profit-sharing. Estrin and Wilson (1988) found a significant difference in labour turnover figures between sub-samples of profit-sharing and non-profit-sharing firms. Cable (1986) found that labour turnover in German profit-sharing firms was actually higher. Wilson and Peel (in Jenkins and Poole, 1990) suggested that such observed differences may have been due to variations in the types of firm which introduced profit-sharing. Wilson and Peel (in Jenkins and Poole, 1990) also surveyed a random sample of 52 engineering firms in the United Kingdom, and discovered that firms which adopted profit-sharing and/or share ownership schemes in Britain suffered from significantly lower absenteeism and quit results.

Commentators have suggested that profit-sharing schemes and share ownership plans may reduce absenteeism and quits via various means. Florkowski (1987), for instance, suggested that the effect was through an impact on employee commitment. Long (1980) suggested that the process operated primarily through enhanced job satisfaction, while Hammer et al (1981) proposed that the employees' psychological and financial motivations were intervening variables.

4.5 CAVEATS IN THE LITERATURE REGARDING THE DESIGN AND IMPLEMENTATION OF RESULT-BASED PAYMENT PLANS

This section considers a number of potential barriers to the successful implementation of result-based payment plans, identified within the literature.

Arising from the foregoing review, it is evident that an appropriately-designed system of contingent remuneration may result in desired attitudinal and behavioural outcomes from employees. Beardwell and Holden (1994) suggested, however, that in the case of inappropriately-designed incentive schemes, managers might reward behaviour that they did not wish to encourage, and conversely may not reward behaviour that they did. Examples included the interpretation of employee openness as 'trouble making', and the gearing of reward systems towards short term results, often at the expense of long term growth and profits.

Jenkins and Gupta (1982) acknowledged that a fundamental problem associated with gain-sharing and profit-sharing plans was that organisational-level performance (e.g. cost savings or profits achieved) was the basis upon which bonuses were computed. Thus a clear connection between an individual's own performance and his rewards was not always apparent. Further, Jenkins and Gupta (1982) noted that if employees had little direct control over the size of their bonuses, it was unlikely that enhanced satisfaction or performance would result.

Jenkins and Gupta (1982) noted that very seldom were employees actually involved in the design of their own incentive systems. They reported on a single instance in the midwest United States, where employees were so involved. Their examination showed considerable employee commitment to the system, and enhanced trust in management.

Problems may arise in the calculation and allocation of profit-shares, as well as in the setting of 'trigger points' for the payment of bonuses. In this context, Wright (1986) suggested that a balance must be set between targets which are almost impossible to achieve and those where the bonus becomes an automatic, regular payment.

Beardwell and Holden (1994) identified specific prerequisites for achieving the successful motivational impact, and thus the implementation of, result-based payment plans. These included that there should be a direct and attestable link between individual effort and the results obtained; employees should have the ability and opportunity to adjust their levels of effort; the methods of production should be directly under control of the operators; there should be no problems with maintaining standards, and there should be a continuous supply of work. They further suggested that the work-plan should allow for objective work standards to be set, which should be attainable and enforced; and that if the required standards are achieved, then the workers should not believe that management will attempt to renegotiate a lower rate of bonus payments. They concluded by emphasising that for financial

participation schemes to be effective, managers must be committed to the principles of result-based remuneration.

The essential requirement that performance and pay should be closely related under schemes of financial participation was also emphasised by Lupton and Bowey (1983). They cautioned that failing the existence of such a close association, 'erosion' would occur, which they defined as:

> '... the progressive loss of managerial control over the relationship between pay and productivity'. (Lupton and Bowey, 1983 p 153)

Lupton and Bowey (1983) stated that such erosion of managerial control may be revealed in workers' tendencies to falsify time or output records, the incorporation of 'slack' into performance standards, or the deliberate relaxation of standards to attract labour in times of shortage.

4.6 A CONTINGENCY APPROACH TO DESIGNING A SYSTEM OF REMUNERATION AND REWARD

In the light of the somewhat contradictory empirical research findings on the effects of financial participation, some commentators (e.g. Lawler, 1986; Lupton and Bowey, 1983) have recommended a contingency approach to the designing of an organisation's remuneration system. Such an approach is based on the assumption that while one kind of managerial practice may achieve the desired objectives in a particular industry, entirely different results may occur from the implementation of the same policy in other industries and circumstances. Thus the particular firm, its environment and its business strategy must be considered in each case. Issues proposed by Lupton and Bowey (1983) to be considered included: the objectives of the payment system, the types of available remuneration plans, and the extent of employee participation in selecting the system. The literature, as reviewed above, has also identified factors such as perceived work-goal difficulty, feedback, supervisors' evaluation styles and managerial commitment as potential moderators to be considered in such a contingency approach.

There thus appeared to be considerable support for the adoption of a contingency perspective in the design of, and research into, financial participation programmes in any industry.

4.7 IMPLICATIONS FOR THIS STUDY

The implications of the foregoing literature review for this study may be stated as follows:

- the various theoretical foundations underpinning remuneration strategies indicated that the relationships between financial involvement, employee motivation and performance were complex and dynamic;
- the ambiguous and conflicting research findings regarding the effects of employee financial participation schemes in various industries, and the conditions under which they were most effective, indicated a need to evaluate such issues on a separate, industry-by-industry basis;
- the various postulated moderating influences on the effects of financial participation indicated that a contingency approach might be essential within a research study of such issues; and
- such a contingency approach would need to consider a broad range of potential moderators, drawing on the various factors identified in the literature and previously tested on research sites other than South African gold mines.

4.8 CONCLUSION

The theory-building commentaries within the literature suggest that financial participation may be an effective way to focus the attention of employees on corporate goals and, through the enhancement of worker attitudes and performance, may thus assist in the attainment of those goals. The supporting empirical evidence is not conclusive, however, and a number of preconditions for, and potential moderators of, successful monetary incentive schemes were identified. A contingency approach to the design of, and research into, the effectiveness of such programmes was therefore recommended.

The following chapter will review the literature on research into the effects of integrated schemes of employee involvement. Such schemes incorporate both decisional and financial participation by employees.

CHAPTER 5

THE EFFECTS OF INTEGRATED SYSTEMS OF FINANCIAL AND DECISION-MAKING PARTICIPATION BY EMPLOYEES: A THEORETICAL AND EMPIRICAL REVIEW

5.1 INTRODUCTION

The previous two chapters have provided an in-depth review of the literature on the effects of schemes of employee participation. Chapter 3 reviewed the literature regarding theory-building and hypothesis-testing research on the effects of schemes of employee involvement in decision-making participation, and chapter 4 provided a similar review in respect of the effects of employee financial involvement. The literature reviewed so far, however, has been in respect of the effects of employee participation within discrete categories, i.e. either in decision-making or in the employer's profits (or cost-savings). The main objective of this chapter is to review the literature on the effects on employee attitudes and performance when such discrete types of participation are combined by an organisation into one 'integrated' programme.

Chapter 2 (section 2.4.3) contained an overview of the different types of integrated schemes of participation that have been described within the literature. These included gainsharing-type programmes, such as Scanlon and Improshare plans. It is not the intention to further review the different variates of integrated employee participation schemes within this chapter, but rather to concentrate on the postulated and researched effects thereof, as reported within the literature.

In achieving the major objective of this chapter, the following sub-objectives will be addressed in sequence:

- in accordance with the structure of the literature reviews in chapters 2 and 3, this review will firstly report on the various theoretical developments in the topic. Commentators' postulations and theory-building on

the effects of integrated schemes of employee participation on specific employee variables, as well as on organisational performance, will be reviewed;
- the empirical research findings relating thereto will be reviewed; and
- implications for this study, arising from the literature review, will be identified and discussed.

As highlighted in the previous chapters, there are many variates of both decisional and financial participation schemes for employees. There are therefore very many possible combinations of such plans that could constitute an 'integrated' programme in practice. Throughout this chapter, emphasis will be placed on the literature which referred to combinations of participation schemes which most closely approximated that existing at the organisation where this research was conducted, i.e.:
- participation in decision-making for all employees, in general and specific work-related issues; combined with
- company-wide financial participation, via collective bonuses based on profits generated, or on costs saved.

Such an integrated approach to participation is similar to gainsharing, and therefore much of this chapter will be devoted to reviewing the literature on the effects of this category of integrated participation programmes.

5.2 THE LITERATURE ON THE EFFECTS OF INTEGRATED SYSTEMS OF FINANCIAL AND DECISION-MAKING PARTICIPATION BY EMPLOYEES

The following sections will review the literature on the effects of integrated programmes of employee participation. It has been noted by some commentators and researchers (e.g. Ramsay et al, 1992) that financial participation and decision-making participation by employees are not inevitably combined by organisations. Ramsay et al (1992, p 202), in a study of 35 British companies, found that there was a distinct tendency to keep profit-sharing and decision-making participation schemes separate from each other. They were unable to detect any significant move to decision-making participation or any

reduction of managerial authority, as a consequence of the institution of profit-participation schemes in isolation. In fact they reported that most of the companies they surveyed went to considerable lengths to insulate their financial participation arrangements from other aspects of organisational management.

5.2.1 PROPOSITIONS AND THEORY-BUILDING

Hammer (1991, p 533) stated that gainsharing was:

> '.. a practice in search of profits and in need of theory.'

White (1979b) also commented that the literature on gainsharing plans, and on Scanlon plans in particular, was limited in size. He attributed this mainly to the fact that such plans had their origins in actual practice and were virtually devoid of theory. This comment can no longer be said to be true, as a substantial body of theory on this topic has recently been developed. This section reviews the propositions and theory-building in this area.

Kelly and Kelly (1990) suggested that a limitation of participation schemes which were primarily financial was that they might have been largely instrumental activities designed 'merely' to increase workers' incomes. Empirical research into the reasons cited by workers for buying shares in their own companies (e.g. Bell and Hanson, 1984; Klein and Rosen, 1986; Long, 1978a) all supported the thesis that workers purchased shares in their employer-firms to make money for themselves, often at little or no perceived risk. Employee satisfaction arising from such schemes was found to only relate to profits made on such purchases. Thus financial gains from employee shareholding schemes exerted a significant impact only on specific attitudes towards the schemes themselves, and not on general job satisfaction or employee performance levels. They did not, for instance, result in changes to attitudes such as an anticipated reduction in a 'them and us' syndrome between management and workers (Kelly and Kelly, 1990).

Gainsharing programmes have often been recommended as a more appropriate means to coordinate management's and workers' objectives. Scanlon plans, for instance, provide workers:

> '... ample opportunity for suggestions and all share in the resulting increase in productivity - note, they don't share in profits. Bonus is based on monthly productivity improvements' (Backer, 1973 p 91).

Hammer (1991) stated that the common features of gainsharing plans were a philosophy of worker participation in decision-making within the firm, a bonus payment formula, and a committee system within the organisation, to facilitate worker participation and to adopt worker productivity improvement suggestions. Scanlon plans, as a major variate of gain-sharing, were considered by theoretical commentators in some depth during the 1970s. Frost et al (1974) proposed that the intrinsic value of participation, in terms of the bonus payments and perceived rewards for extra effort by workers explained the success of Scanlon plans. Goodman and Moore (1976) focused on the psychological processes believed to have operated in gainsharing. They developed a model which used expectancy theory principles to explain the process by which workers were postulated to respond positively to the plans.

Hammer (1991) commented that the prior research on gainsharing (and in particular on Scanlon plans) had paid a disproportionate amount of attention to the belief that worker participation was highly desirable in itself and was the primary cause of productivity improvement. This may have served, Hammer (1991) suggested, to restrict the field of alternative hypotheses that had been available for testing in this field of research. Hammer (1991, p 538) addressed this perceived limitation by proposing a model that explicated how the bonus and decision-making participation components of gainsharing plans may have operated to improve productivity levels in an organisation. This model is reproduced in figure 5.1.

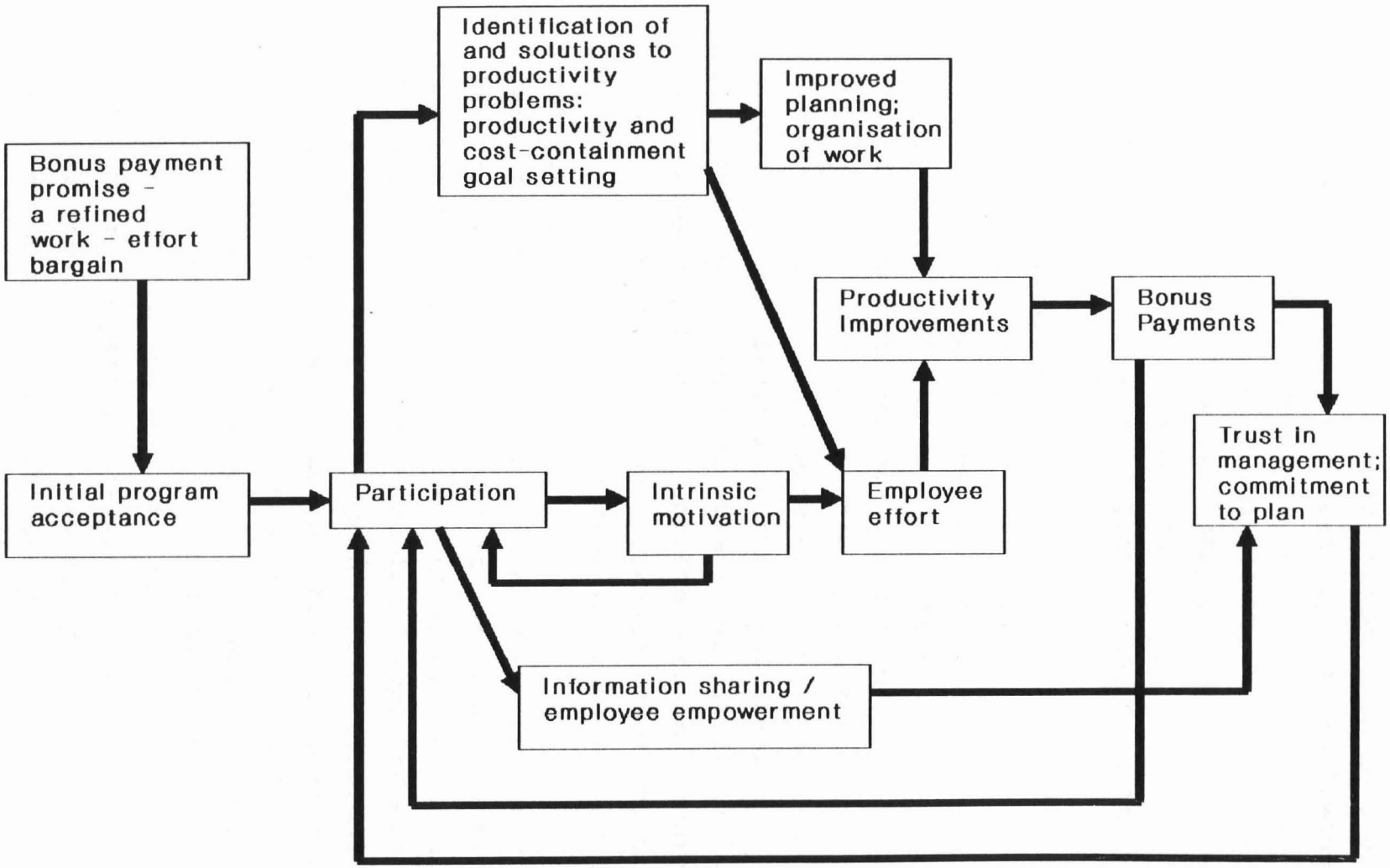

Figure 5.1: The Roles of Worker Participation and Productivity Bonuses in Gainsharing Programmes

Source: Hammer (1991, p 538)

Notable points of the model were as follows :

- the financial bonus appeared twice, both as a promised outcome and also as an actual payment, following the achievement of productivity gains by employees. Hammer (1991, p 538) suggested that it was the promise of equity in the contractual relationship between employer and employees ('the wage and effort bargain') that created the initial acceptance of gainsharing programmes by workers;
- participation by employees in decision-making led to three distinct outcomes. These were firstly, the identification of problems preventing the improvement of productivity, and the potential solutions thereto; secondly, the creation of intrinsic motivation within employees to make an enhanced work effort; and thirdly, the empowerment of non-managerial employees through the sharing of high-level management information;
- the model suggested that integrated participation programmes would lead to improvements in planning and organisation of work, and increased effort by employees, arising from their involvement in problem-solving activities;
- three feedback loops were included within the model. Such features were also included in Porter and Lawler's (1968) non-recursive model of motivation, discussed in chapter 3. Feedback loops within models of employee motivation and behaviour reflect a high degree of complexity in the relationships between the variables. Of particular note in Hammer's (1991) model was the feedback loop linking the employee's experience of intrinsic motivation to 'participation'. This was justified by Hammer (1991) on the grounds that workers who were provided the opportunity to participate may have been motivated to do so, but they would not necessarily be more motivated to perform their actual work duties. Hammer (1991) acknowledged two arguments against this line of reasoning. Firstly, he agreed that participation could be viewed as an integral part of the job, that workers experienced motivation as they participated, and that

their work could be influenced accordingly. Secondly, he acknowledged that the introduction of gainsharing could lead to changes in job design. Researchers such as Lawler (1986), and McKersie (1986) demonstrated that gainsharing was often accompanied by changes to the basic work process such as broader job-scopes and worker autonomy. Hammer (1991) thus acknowledged the argument, which was at odds with the feedback loop within his model, that if participation was a fully integrated part of the labour process, it may be intrinsically motivating and could thus also be a direct cause of worker performance;

- the model suggested that the act of actual payment of bonuses to workers, under an integrated participation plan, could lead to a strengthening of trust in management and an improved level of commitment by the workforce to the participation scheme. Such trust and commitment, Hammer's (1991) model suggested, may thus have further reinforced the participative climate of the organisation; and
- the model reflected that the participation by employees in both profits and decision-making combined to enhance not only their attitudes and motivation, but also their productivity and work performance.

Hammer's (1991) model reflected the short-range nature of decision-making in which workers are typically involved within gainsharing programmes. These decisions, he suggested (1991, p 539) related primarily to the 'nuts and bolts' issues surrounding the labour process, and how the work was to be performed.

Hammer (1991, p 541), in commenting on his model of the processes at work within gainsharing programs, set a number of research problems of relevance to this study. He adopted a contingency perspective, and identified the need to ascertain which kinds of plans, or combinations of components therefrom, would work best and under which circumstances. He also observed the need to establish, empirically, how gainsharing improved workers' productivity, in terms of the dynamic

processes involved. He thus recommended that empirical research should examine how profit- and decision-making participation interacted to jointly improve attitudes and productivity. He also recommended a longitudinal case study approach as an appropriate research design to achieve those objectives (in considering an appropriate research design for this study, cognisance was taken of these recommendations, as will be detailed in chapter 10).

A number of additional commentators have recommended the integration of employee financial- and decision-making participation schemes. Mohrman and Ledford (1985) recommended the formal integration of decision-making participation within overall organisational procedures. They particularly recommended the integration of decision-making and financial participation. Long (1980) and Powell and Schlacter (1971) suggested that employee satisfaction and performance would be enhanced to a greater extent when decision-making participation was linked to financial rewards which were contingent upon the attainment of productivity and performance targets.

Lawler (1988) recommended a 'high involvement' approach for the management of an organisation, incorporating a combination of financial and decision-making participation at all levels of the firm's hierarchy. He stated that this approach 'structured' an organisation so that people at the lowest level had a sense of involvement, not just in how their work should be performed, but also in respect of how their group and the total organisation operated. Power, information, knowledge and rewards were thus moved towards the lowest organisational level. Lawler (1988) noted, however, that virtually every feature of a control-orientated organisation had to be redesigned in order to introduce such 'high involvement' management principles and systems.

There are, however, few reports within the literature to confirm the effectiveness of a 'high involvement' strategy. Such reports that do exist are case-study in nature, such as

Rosen et al (1983). Lawler (1988) admitted that evidence on 'high involvement' organisations tended to be sketchy and testimonial in nature although, he stated, such evidence did generally support the notion that 'high involvement' managerial styles led to superior operating results. Hammer (1991, p 535) stated that the reported case studies on this topic were poorly designed, and lacked detailed statistical analyses of the data generated by the researchers. Such reports did not therefore constitute empirical studies, but rather added to the literature of theory-building and postulations. A limited number of such case studies are therefore reviewed in this section.

Lawler (1988) cited the American 'People Express' airline as an example of an organisation that had introduced a 'high involvement' management style. This (now defunct) airline invented new work-scheduling approaches, pay structures, training programmes and a total new organisational design, in order to operate in a 'high involvement mode'. This was a novel approach to the management of airlines at the time (1980s), and was considered by commentators (e.g. Lawler, 1988) to have resulted in high levels of commitment from the workforce.

A much-reported example of integrated participation by employees in both financial- and decision-making areas in South Africa was the Cashbuild organisation. This case was reported in detail by Koopman et al (1987). Cashbuild's reported success in establishing effective decision-making participation structures at all levels of the organisation paralleled the institution and expansion of monetary and non-monetary reward systems.

In reviewing the Cashbuild case, Koopman et al (1987) suggested that it was unlikely that organisations would achieve meaningful participation and commitment from their workforce if, within such programmes, they were not prepared to establish reward systems that were commensurate with their employees' efforts and aspirations. They further suggested

that, for the vast majority of South African employees, there was very little perception of any true relationship between their efforts and the rewards provided in the workplace. Koopman et al (1987) thus emphasised that, at least in the South African context, participative management programmes must incorporate reward systems, and that these must operate in accordance with an overall participative philosophy within the organisation.

Koopman et al (1987) further proposed a contingency approach to the design of participative programmes, by suggesting that each organisation would require a unique combination, sequence or emphasis on issues within their programmes of participation. These issues, they suggested, would need to be identified by the firm's management team. They cautioned that there was no 'safe' route to the transformation of an organisation into 'participative mode'.

5.2.2 EMPIRICAL STUDIES: HYPOTHESIS-TESTING RESEARCH

Cotton et al (1988) noted that there was little research literature on the effects of gainsharing plans on job satisfaction and other employee attitudes. This comment has been supported by the findings of this literature review. Empirical studies have mainly concentrated on seeking support for hypothesised improvements in performance at the organisational level, after the introduction of integrated participation programmes such as gainsharing. Despite the development of sophisticated explanatory models of the motivational and behavioural processes at work in such schemes (e.g. Hammer, 1991; Porter and Lawler, 1968), few multivariate studies testing all or most of the relationships therein have been reported.

Cotton et al (1988), in their detailed review of prior research into forms of participation and the effects thereof, reported a generally consistent set of findings, supporting the proposition that gainsharing programmes led to improved organisational performance. Early empirical research into the effects of gainsharing plans were, however, primarily

descriptive case studies, incorporating no empirical analysis. These were conducted during the 1960s and 1970s, and reflected, generally, that gainsharing plans led to increased productivity and enhanced employee relations. Recent studies have analysed gainsharing plans in more substantial samples, i.e. on a comparative basis across a number of organisations.

Bullock and Lawler (1984) analysed 33 cases where Scanlon plans had been applied during the years 1950 to 1961. Two-thirds of the programmes were reported as successful, with improved worker attitudes and performance noted. Bullock and Lawler's (1984) research also attempted to identify specific variables hypothesized to influence the success of gainsharing schemes. It was found that the majority of the surveyed companies had introduced formal participation schemes, but that the size of each organisation was not a significant determinant of the success or failure thereof. Most management teams surveyed by Bullock and Lawler (1984) were highly committed to the participation schemes in their organisations.

The effects of gainsharing plans were also examined by Schuster (1983, 1984). 28 organisations were reviewed, half of which displayed significant improvements in productivity after the introduction of their respective gainsharing programmes.

The necessity to make regular bonus payments to staff, if motivation and performance were to remain enhanced, was suggested by the results of Schuster's (1984) study. The comparison of cases in that study reflected a lack of success when bonus payments were seldom made. Also, it was noted that worker cooperation ceased when the bonus formula was unilaterally altered by management, without consultation with the workers. Nevertheless, Schuster (1984) reported a significant increase in productivity after the implementation of a Scanlon plan in a manufacturing company.

Scanlon plans in eight organisations were reviewed by Cummings and Molloy (1977). All eight firms reported improved productivity. Jenkins and Gupta (1982) reported improved

productivity in an organisation which applied gainsharing of the Improshare variety. Frost et al (1974) noted, however, several cases where productivity had not improved after the introduction of Scanlon plans.

White (1979b) studied the effects of Scanlon plans in 23 companies in the American mid-west. Data was collected using six different questionnaires over a period of five years. This research found that there was a strong positive relationship between the extent of participation in decision-making and success of the programmes, as measured by subsequent retention of the plans, or by forced-choice ratings by three independent judges. Managerial attitudes, specifically, were strongly related to the success or failure of the Scanlon plans. White (1979b) reported that the attitudes of managers to participation predicted, to some extent, whether the plans would ultimately succeed or fail. The longitudinal nature of White's (1979b) study was of particular value, and suggested that success of Scanlon plans was highly related to the number of years that the companies retained the schemes. White (1979b) thus proposed that managerial patience was essential in the implementation of gainsharing programmes, if high levels of success were to be achieved. He also suggested that expectations of instant change, after introducing gainsharing, were likely to be met by disappointment, that Scanlon plans required strong support from top management to succeed, and that the nature of the industry did not seem to affect the success or failure of Scanlon plans.

Employee share-ownership, as a particular variate of participation, has been evaluated by a number of researchers in terms of its ability to improve worker attitudes and performance. Whether such programmes are integrated, as opposed to being mainly or entirely financial in nature is, however, debatable. While employee-shareholders may have voting rights attached to their shares, the percentage total shareholding in workers' hands will determine their actual ability to influence decision-making in the organisation.

Cowley (1992) undertook a detailed investigation of E.S.O.P. programmes operated in South Africa. He noted that although the concept was still in its infancy in this country:

> '... the spectrum of industries covered by employee stakeholders spans mining houses, manufacturers, retail distribution, financial institutions and construction' (Cowley, 1992 p 121).

He noted that there was a strong belief by South African management that employee shareholding led to more productive employer companies, and the creation of more jobs. His study did not, however, test these propositions empirically. He also suggested that:

> '... the percentage of the company held by employee shareholders in each case is too small to have any dramatic effect on visible productivity at present' (Cowley, 1992 p 121).

Researchers who have studied the effects of employee share-ownership schemes, where either the majority or the entire equity has been transferred to the workers, have generally established positive outcomes. Rosen and Quarry (1987) studied 45 employee-owned firms over a ten-year period and reported that 73 per cent thereof improved their performance after the introduction of employee-shareholding. Long (1980) found favourable effects on job attitudes and organisational performance at three firms that had converted to employee ownership. Such favourable findings have not been reported by all researchers, however. Hammer and Stern (1980) and Tucker et al (1989) all detected no significant alterations of employee attitudes after the adoptions of E.S.O.P. programmes by the employer firms.

Argyle et al (1958), investigating employee participation in various departments of an organisation, found that participation in decision-making was effective, in terms of improving employee productivity, but only in those departments which did not offer incentive pay to their staff. This, Argyle et al (1958) suggested, indicated that decision-making

participation provided no added benefits to an organisation when financial participation was already in place.

A number of detailed descriptive case-study reports have suggested that companies' performances have been considerably enhanced by the introduction of integrated systems of employee participation. Long (1979) studied, on a longitudinal basis, the desire for and the effects of decision-making participation in a Canadian trucking company in which 70 per cent of workers and management also purchased shares. He found, however, that worker-owners did not differ from non-owners in their desires for participatory decision-making. He therefore concluded that financial participation did not, in this instance, affect employees' propensity to be involved in decision-making participation.

Griffin (1988) tested the consequences of implementing quality circles, using a longitudinal and experimental research design. These programmes included both participatory decision-making and performance bonus elements. He found that four employee dependent variables: job satisfaction, organisational commitment, performance and intentions to quit, improved gradually over an eighteen month period but then decreased back to their initial levels.

Deci (1975) distinguished between two broad classes of motivation: intrinsic and extrinsic. Intrinsic motivation referred to the performing of an activity for no other apparent reason than the worth of the activity itself. Extrinsic motivation referred to the performance of work due to the provision of external rewards. Deci (1975), in an experimental study, concluded that intrinsic motivation and extrinsic motivation were not additive. He thus concluded that systems incorporating contingent (extrinsic) payments were not necessarily compatible with (intrinsic) decision-making participation (Deci, 1975 p 225). This was in contrast to the principle within Porter and Lawler's (1968) model of motivation, which assumed that intrinsic and extrinsic rewards had additive effects.

Turnage and Muchinsky (1976) performed an experimental study, and found that intrinsic and extrinsic motivations had an interactive rather than additive effect. They concluded, from a study of correlations between performance and the two different types of motivation, that the effects of external rewards and intrinsic motivation on performance were quite distinct for different tasks. Jordan (1986) further supported Deci's (1975) findings in a study of 48 health care technicians. He found that expectations of rewards which were contingent upon performance decreased already-existing intrinsic motivation levels in workers. Rosenberg and Rosenstein (1980) demonstrated however that identical levels of employee performance could be attained without both types of worker participation being applied. They demonstrated that the addition of productivity bonuses to an already-existing decision-making participation programme was followed by only a modest increase in productivity in the workforce.

A few researchers have attempted to empirically support some of the hypothesised relationships between variables, within Hammer's (1991) model of integrated participation schemes. Rosenberg and Rosenstein's (1980) research supported part of the model by testing the relationship between the extent of financial and decision-making participation and productivity improvements, and finding the relationship to be significant.

Hammer (1991) commented that two features stood out in the literature on empirical evaluations of gainsharing plans. These were firstly, that the presence of worker participation in decision-making was in most cases identified as a necessary condition for success, and secondly, that the 'wage and effort bargain' was omitted from most studies as a variable of importance in explaining successes and failures of such plans. He suggested that the secondary role afforded to the issue of how gains were distributed under Scanlon plans was surprising, given that they had originated in the trade union movement, where improving workers' earnings is a priority. He thus submitted that prior researchers must have consciously omitted the issue from their studies. He further suggested that this

was due to the strong philosophical commitment that pioneering Scanlon plan advocates had displayed to employee participation as a means of resolving conflicts between the competing interest groups of management and employees (Hammer, 1991 p 537). He further commented that research findings into gainsharing plans suggested that both financial and decision-making participation were important elements in successful programmes.

5.3 IMPLICATIONS FOR THIS STUDY

The foregoing literature review highlighted a number of important issues which were of relevance to this study. Firstly, the theory-building commentaries of recent years (especially Hammer, 1991) have provided a wealth of hypotheses for empirical testing. Secondly, however, the extant research literature is limited to reports of studies that have, in the main, only tested univariate relationships of interest. Few researchers have attempted to support or refute the recently-developed complex multivariate models of integrated participation, which reflected inter-relationships between financial and decision-making participation, and employee attitudinal and behavioural outcomes. By extension, researchers have similarly not attempted to test, from a contingency perspective, the potential moderating effects of selected organisational and individual factors on the relationships postulated by such models. There was thus a need to undertake this type of research study, wherein the dynamic processes involved in the operation of integrated programmes of employee participation could be explored, in a specific organisational and industrial setting.

This study therefore aimed to make a contribution to the body of research in the area of integrated participation schemes, by testing a multivariate model of integrated employee participation, within the South African gold-mining industry.

5.4 CONCLUSION

This chapter reviewed the extant literature regarding the effects of integrated employee participation schemes. Arising

from this review, the need to empirically test a multivariate model of integrated employee participation was identified. Such a model, following the lead of Hammer (1991), needed to include postulations regarding the relationships between employee attitudes and their performance, under schemes of 'integrated participation'. The following chapter will therefore provide a brief review of the literature regarding the relationships between employee attitudes and their productivity and performance.

CHAPTER 6

EMPLOYEES' ATTITUDES AND WORK BEHAVIOUR: A THEORETICAL AND EMPIRICAL REVIEW

6.1 INTRODUCTION

The previous three chapters reviewed, in detail, the literature on the effects of schemes of employee participation. This included, within chapter 5, a review of the effects of integrated schemes of participation, such as that practised on the subject mine, on employee attitudinal and behavioural outcomes.

The literature contains a number of models (e.g. Hammer, 1991) and theory-building commentaries (e.g. Lawler, 1988) on the interrelationships between participation programmes, and employees' attitudes and work-related behaviours. The behavioural outcomes of primary interest within such models and commentaries have been employees' productivity and performance, as well as their absenteeism and turnover.

Iaffaldano and Muchinsky (1985) stated that the relationship between employees' attitudes and their behaviours in the workplace was one of the most frequently investigated topics of organisational research. Further, in the context of research into employee participation programmes, Hammer's (1991) model suggested that the effects of such schemes on employee behaviours may have been indirect in nature, with employee attitudes, such as job satisfaction, having operated as intervening or moderating variables.

It is therefore appropriate, within the literature review of this thesis, to provide an overview of the theory-building commentaries and hypothesis-testing research on the relationships between employees' attitudes and their work-related behaviour. This is the main objective of this chapter. In achieving this aim the following sub-objectives will be addressed in sequence:

- in accordance with the structure of the previous chapters, the various theoretical developments in the topic will be discussed. Commentators' postulations and theory-building on the relationships between employees' attitudes and their work-place behaviour will be reviewed;
- the empirical research findings relating thereto will be reviewed; and
- implications for this study will be identified and discussed.

6.2 THE LITERATURE ON THE RELATIONSHIPS BETWEEN EMPLOYEES' ATTITUDES AND THEIR BEHAVIOUR

The relationship between job attitudes and employee behaviour has long been a controversial issue for many commentators and researchers. Steers and Porter (1991) suggested that the origins of this controversy stemmed from disagreements as to the potential causal relationships between variables such as job satisfaction and productivity, and from different interpretations of their meanings and methods of measurement.

Studies into the relationships between employee attitudes and their work-place behaviour have included those of a theoretical orientation (e.g. Schwab and Cummings, 1970) and those which were empirical in nature (e.g. Herzberg et al 1957, Vroom, 1964). Iaffaldano and Muchinsky (1985) commented that the volume of research on this topic had abated somewhat in recent years. Nevertheless new reports of theoretical and empirical developments have continued to appear in the literature, including reviews and meta-analyses of prior studies. The following section will briefly review the theory-building literature on the relationships between employees' attitudes and their work-related behaviour.

6.2.1 PROPOSITIONS AND THEORY-BUILDING

Buchko (1993) suggested that while attitudinal measures were important dependent variables in organisational research, the effects, in turn, of such employee attitudes on actual work-related behaviours were potentially more significant

relationships of interest. Indeed, the proposition that 'a happy worker is a productive worker' has been endorsed by organisational theorists for over 50 years (e.g. Herzberg et al, 1957; Kornhauser and Sharp, 1932).

Steers and Porter (1991, p 257) proposed a conceptual model of job attitudes and behaviour, which is reproduced in figure 6.1. This model suggested that employees with 'negative beliefs' about their jobs, for example that the work lacked responsibility or variety, would develop 'negative attitudes' about their work. These 'negative attitudes' could in turn lead to specific 'behaviour intentions' on the part of the employees, such as intentions to resign or to reduce their work-effort. These 'behavioural intentions' might, Steers and Porter (1991) suggested, ultimately translate into actual 'negative' employee actions such as unexcused absenteeism, or resignation.

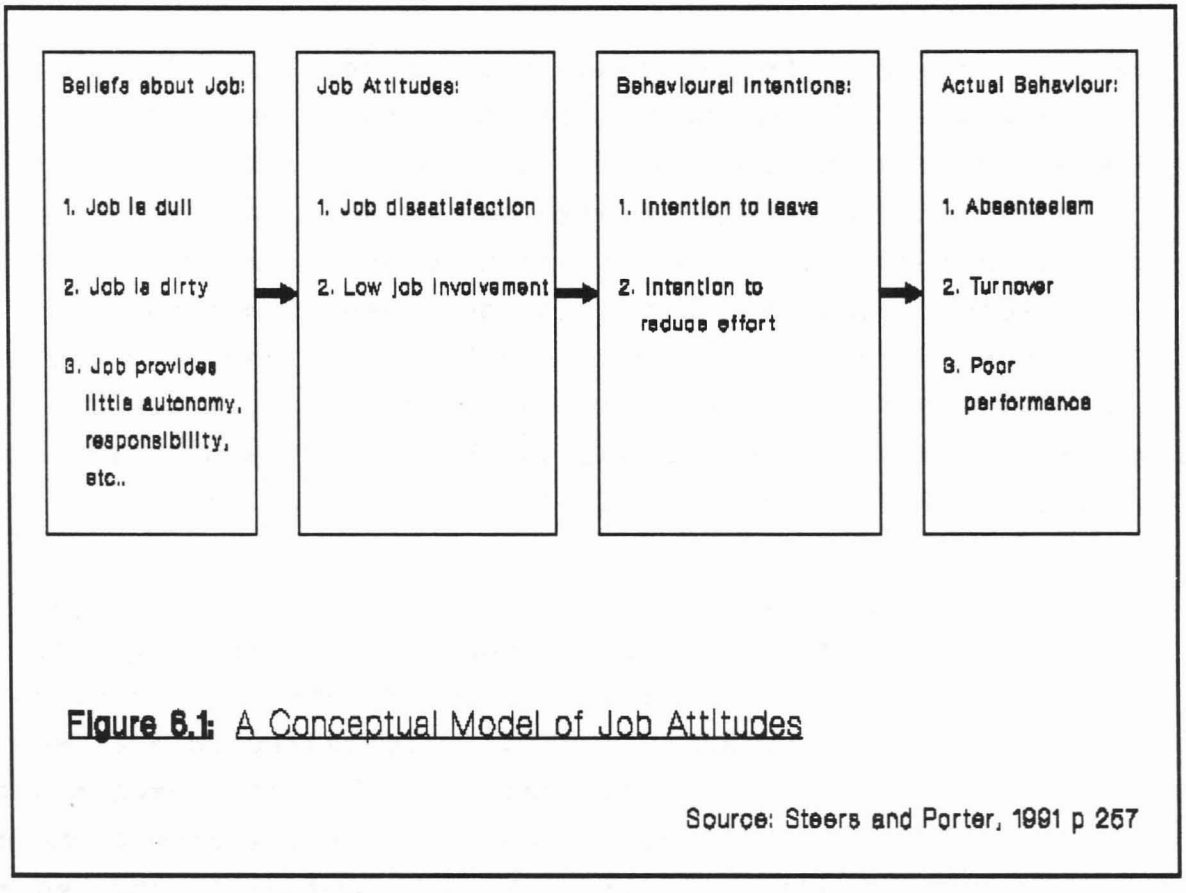

Figure 6.1: A Conceptual Model of Job Attitudes

Source: Steers and Porter, 1991 p 257

The occurrence of 'negative behaviours', such as proposed by Steers and Porters' (1991) model, presupposed that the

individuals would be able to carry out such intentions. However this may not always have been the case. Employees who wanted to resign may not, for example, have been able to find alternative employment. Steers and Porter (1991) suggested that such disaffected employees might, alternatively, put less effort into their jobs, as a means of expressing their frustrations.

Steers and Porter's (1991) model concentrated on the 'negative' effects of an inappropriate job design. They acknowledged, however, that this traditional model of employee job attitudes and behaviour had been criticised by commentators as being too simplistic. Alternative and more complex proposals of the relationships between these variables have been proposed by various commentators including Porter and Lawler (1968), whose model was discussed in detail in chapter 3.

A number of commentators have concentrated on the relationship between employees' job dissatisfaction and their ultimate decisions to resign from their employment. Porter and Steers (1973) suggested that an employee's expressed 'intention to leave' a firm may have been the logical step after he or she experienced job dissatisfaction. This 'process' approach to the employee resignation decision was supported by Mobley (1977), who suggested that the decision to quit was indeed a final step in a process. He proposed a model of this 'employee turnover decision process', which is reproduced in figure 6.2.

In Mobley's (1977) model, the worker's 'intention to quit' had several preceding steps, and was depicted as the penultimate step in the process of employee turnover, i.e. prior to the actual act of quitting. This model thus suggested that there were a number of mediating factors in the relationship between an employee's initial feeling of job dissatisfaction and his or her actual resignation. Specifically, the decision to search for alternative employment opportunities and the subsequent evaluation of those alternatives were proposed, in

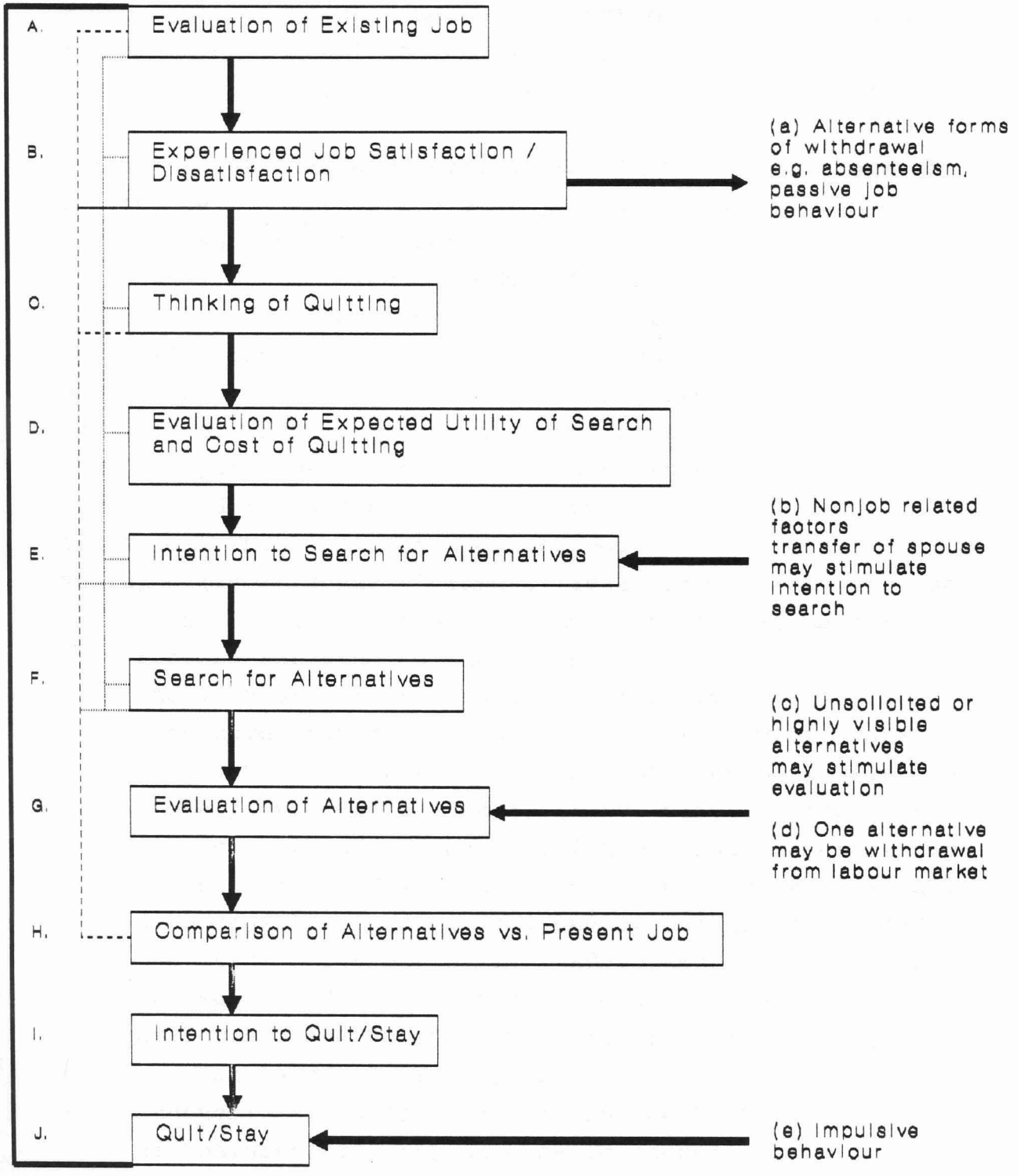

Figure 6.2: The Employee Turnover Decision Process

Source: Mobley, 1977, p 313

Mobley's (1977) model, to be major elements of the turnover process. Block 'D' of the model also suggested that employees would consider issues such as the potential loss of seniority and employment benefits that might arise from their resignations, before deciding whether or not to resign.

Coldwell (1982) argued that, in the light of shortages of skilled labour within the South African economy, manpower planners should concentrate on retaining key members of the workforce. He proposed a 'Model of Propensity to Leave', that identified employee perceptions of 'pulls' ('attractors') and 'pushes' ('repellers') that impacted on a worker, in his employment. Coldwell (1982, p 69) suggested that the ultimate decision of whether or not to leave employment would depend on the employee's perceived balance between the sum of positive 'pulls' and the sum of negative 'pushes' in his work situation. This evaluation can be equated to block 'A' of Mobley's (1977) model. Coldwell (1982) identified many factors that might 'pull' or 'push' an employee in this manner:

- factors relating to the 'organisational situation' included organisation size, visibility, hierarchical structure, management and supervisory styles, work conditions, security, pay, and interpersonal relations. These factors were identified by Coldwell (1982) as 'structural and context' variables, and therefore capable of being altered by management. Job 'content' variables, also capable of being designed by management included the job itself, responsibility, advancement and achievement;
- 'personal and biographical' factors included an employee's age, education, marital status, length of service, and self-image; and
- 'economic situation' factors included the general level of business activity on a macro-economic level, and the number of visible organisations offering competing job opportunities, on a micro-economic level.

In addition to developing theories on the relationships between employees' attitudes and their turnover, commentators have proposed that absenteeism was related to job

dissatisfaction. Rhodes and Steers (1990) suggested that explanatory models of the causes of employee absenteeism could be divided into three categories. These categories were:

- pain-avoidance models (e.g. Brayfield and Crockett, 1955). In such models, 'absence behaviour' by employees was viewed as a means of avoiding negative work experiences and punishment situations;
- adjustment-to-work models (e.g. Gibson, 1966; Hill and Trist, 1953; Rosse and Miller, 1984). In these models, the act of absenting himself or herself from work was regarded as an employees' response to changes in his or her working conditions; and
- decision models (e.g. Gowler, 1969; Vroom, 1964), where absenteeism could be viewed primarily as a rational decision to obtain a valued outcome. Studies in this area have included that of Dunn and Youngblood (1986), who suggested that there was a relationship between an employee's marginal rate of income and his or her propensity to 'trade-off' wages earned for additional leisure time;

As will be detailed in the following section, researchers have reported inconsistent and contradictory findings from their studies of the inter-relationships between employees' job satisfaction and their work-place behaviour, including their effort and performance. Organ (1977) suggested that a solution to these problems might have been to redefine the meaning of the concept of 'performance'. He noted that various researchers had attached multiple meanings to the term, including dimensions such as cooperation, informal assistance of co-workers and superiors, and generalised tendencies towards compliance. He suggested, although without empirical support, that job satisfaction might have been more closely related to performance measures incorporating informal types of worker 'helping behaviour', than to the more traditional and narrow measures of productivity.

A broader concept of 'citizenship behaviour' within organisations was used by Bateman and Organ (1983) to denote

valued or appreciated 'contributions' by employees. Such 'contributions', Bateman and Organ (1983) stated, may not have been directly related to traditional productivity, or may not have fallen within the enforceable responsibilities of the employees. Bateman and Organ (1983) rationalised that such behaviour may have occurred as a result of individual employees feeling the need to reciprocate, when provided with resources, treatment and work opportunities that induced job satisfaction. This theory was drawn from social exchange concepts as outlined by Blau (1964). Bateman and Organ (1983) suggested that a conceptual link between job satisfaction and individual 'citizenship behaviour' may have revealed itself in actions such as support of a supervisor, or gestures to enhance the reputation of the employee's work unit. A second rationale for such 'citizenship behaviour', proposed by Organ (1988), was drawn from extensive research into experiments on pro-social and altruistic behaviour. Thus Organ (1988) noted substantial evidence supporting a 'mood state' or 'positive effect' explanation for many forms of positive employee behaviour, which had been regarded as performance improvements.

6.2.2 EMPIRICAL STUDIES: HYPOTHESIS-TESTING RESEARCH

Iaffaldano and Muchinsky (1985) identified three main areas of research into the associations between job satisfaction and employee behavioural outcomes such as their work performance and unexcused absenteeism. The first research area related to the question of causality between satisfaction and performance (e.g. Lawler and Porter, 1967; Schwab and Cummings, 1970). The second area of research investigated potential moderators of the relationship between job satisfaction and performance. This area included investigations of the moderating impact of contingent financial rewards (e.g. Cherrington et al, 1971; Lawler, 1973) and of situational moderators (e.g. Bhagat, 1982). A third category of research in this area concentrated on methodological and measurement techniques for increasing the magnitude of the associations identified between job satisfaction and employee performance (e.g. Fisher, 1980).

Research undertaken in the 1950s and early 1960s generally concluded that there was no strong over-riding relationship between employees' job satisfaction and their productivity. Vroom (1964) reviewed 20 of these studies, and was only able to report a median correlation of $r = 0.14$ between these variables. Herzberg et al (1957) were somewhat more optimistic however, and commented that while such correlations may have been low, they were nevertheless statistically significant. They thus concluded that further study of the relationship between satisfaction and work output was warranted.

Iaffaldano and Muchinsky (1985) undertook a meta-analysis of prior research into the relationship between employees' job satisfaction and their performance. The objectives of that study were to integrate the findings of recently-reported research, and to ascertain whether the associations determined, using meta-analytical techniques, differed substantially from the low correlations reported by earlier reviewers (e.g. Vroom, 1964). Iaffaldano and Muchinsky (1985) noted that the previous narrative reviews (e.g. Herzberg et al, 1957; Vroom 1964) had drawn tentative conclusions regarding the nature of this relationship, but that the statistically rigorous procedure of meta-analysis would offer more exact conclusions regarding the true theoretical correlation between these variables, and might also indicate any significant moderators of the relationship.

The results of Iaffaldano and Muchinsky's (1985) meta-analysis were consistent with the findings of Vroom (1964). The average correlation between job satisfaction and performance was found to be $r = 0.146$. Iaffaldano and Muchinsky (1985), commenting on their findings, noted that despite psychometric and methodological advances in research since Vroom's (1964) study, such as the development of refined measures of job satisfaction (e.g. the Job Description Index), the recognition of the need to use larger sample sizes, and the increased use of longitudinal design, numerous researchers had been unable to obtain more substantial satisfaction - performance correlations than those reported by Vroom (1964).

Iaffaldano and Muchinsky (1985) further noted that the level of empirical support for contingency models, which proposed the conditions under which satisfaction and performance would be more strongly related, had not been substantial. Their meta-analytical review of such models noted that only eight out of 217 satisfaction - performance correlations exceeded $r = 0.44$. This degree of association only explained 20% of the variance of the dependent variables in such studies. Iaffaldano and Muchinsky (1985) concluded their analysis by noting that few other categories of empirical studies had supported a null hypothesis so frequently, and yet continued to foster additional research.

Chapman and Chapman (1969) suggested that certain observed relationships between variables may in fact have been 'illusory correlations', i.e. perceived correlations between two variables that logically or intuitively may have been expected to interrelate, but in fact statistically did not. In the light of the results of their meta-analysis, Iaffaldano and Muchinsky (1985) suggested that the satisfaction - performance relationship may have fallen within this category of 'illusory correlations'.

Consistent with the job satisfaction - performance hypothesis is the proposition that job-related dissatisfaction leads to reduced employee performance. This proposition was incorporated within Steers and Porters' (1991) model of job satisfaction and employee behaviour (discussed in section 6.2.1). Motowido et al (1986) investigated this proposition by surveying the extent of pro-social behaviour by nurses towards colleagues and patients. The proposition was significantly supported by the negative correlations, reported by Motowido et al (1986), between self-reported job satisfaction and five measures of the respondents' anti-social behaviour.

Research results into the relationships between employees' job satisfaction and their turnover or propensity to resign have tended to support hypothesised negative associations between these variables (e.g. Shore and Martin, 1989; Williams and

Hazer, 1986). Of particular relevance to this study were the findings of Klein (1987), who established that employee satisfaction with an E.S.O.P. participation programme was negatively related to turnover intention.

An aspect of Mobley's (1977) model of the employee turnover decision process (see figure 6.2), discussed above, which was of particular relevance to this study, was the postulated direct link between an employee's intention to resign (block 'I') and the actual act of resignation (block 'J'). In this study, it was noted that actual employee turnover on the subject mine was insignificant, and therefore was unsuitable for use as a dependent variable. This problem had been previously addressed by researchers (e.g. Lee and Mowday, 1987; Mobley, 1975; Price and Mueller, 1981), who used 'turnover intention' as a surrogate for actual employee turnover. This substitution has been justified in terms of Mobley's (1977) propositions, and the findings of researchers such as Steers and Mowday (1981). They found that employees' intentions to leave an organisation were significantly related to their actual turnover behaviour. Further evidence of a strong relationship between 'propensity to resign' and actual termination was found by Atkinson and Lefferts (1972). Of further relevance to this study were the findings of Kraut (1975) who noted a significant relationship between expressed intention to remain in employment and subsequent employee participation.

Hogan (1987), using a slightly modified version of Coldwell's 'Model of Propensity to Leave' (see section 6.2.1), explored for causes of job dissatisfaction and consequent career changes among South African mining engineers. Although limited to a particular group of employees, this study was valuable in determining two major generic factors that contributed towards job dissatisfaction in this category of personnel. These were, firstly, a 'graduate perception' of their self-image in the organisational culture, and secondly, a 'graduate reaction' to their social environment. Hogan (1987) established that graduates in the mining industry who experienced declines in

self-image after joining the industry disliked their work, had low opinions of their supervisors and co-workers, and had low overall job satisfaction. Consequently, they tended to have a high propensity to leave.

These reported findings all suggested that an employee's 'propensity to resign' may have been an appropriate dependent variable to include within this study. Arising from this review, and the propositions of the models of Mobley (1977), and Coldwell (1982), it was therefore decided to measure employees' 'Propensity to Remain', as an (inverse) surrogate measure for their actual turnover behaviour.

Reported research findings into the relationship between employee job satisfaction and absenteeism have been inconsistent. Mcshane (1984) reviewed 24 published studies of the employee absence - job satisfaction relationship, and found a significant relationship between dissatisfaction and absenteeism. He further related absenteeism to specific employee dissatisfaction with co-worker pay and supervision, and found that dissatisfaction with these areas also led to higher absenteeism. Farrell and Stamm (1988) undertook a meta-analysis into the relationship between job satisfaction and employee absenteeism, and found significant negative correlations between overall job satisfaction and both total time absent and frequency of absence.

Farrell and Stamm (1988) found a significant negative correlation between overall job satisfaction and employee absence, as measured by both total time and frequency of absence. However Hackett and Guion (1985) found, in a meta-analysis of prior studies, that less than four percent of the variance in recorded employee absenteeism was explained by overall job satisfaction. They thus concluded that the correlations in the prior studies were statistically significant, but weak in strength.

Rhodes and Steers (1990) commented on the inconsistent research findings regarding the job satisfaction - employee

absence relationship. They stated that there was insignificant evidence to support the proposition that overall satisfaction was a significant predictor of absence frequency. They thus concluded that it would be of little value to test further models based on assumptions of such a direct relationship. However they suggested that it would be worthwhile to include attitudinal variables in more comprehensive models of employee absenteeism. They justified this suggestion by proposing that attitudes such as job satisfaction, satisfaction with supervision, and satisfaction with pay could serve to 'pull' an employee towards the organisation.

Bateman and Organ (1983) tested the relationship between job satisfaction and the broader construct of employee 'citizenship behaviour'. This latter construct was used to denote:

> '...helpful, constructive gestures exhibited by organisation members and valued or appreciated by officials, but not related directly to individual productivity nor inhering in the enforceable requirements of the individual's role' (Organ, 1988 p 278).

They found a correlation of $r = 0.41$ between these variables, but could not reject the null hypothesis that there was a common cause of the variance in both variables. That is, they acknowledged the possibility that the relationship was not a causal one, but rather that the two measures might both be associated with (i.e. their values might both be determined by) a third, unknown variable. Nevertheless the size of this correlation was substantially larger than that achieved by Vroom (1964) in his review of prior studies of satisfaction and traditional performance measures ($r = 0.14$).

Smith et al (1983) tested for a relationship between satisfaction and a more refined measure of performance, which they termed 'organisational citizenship behaviour', among 220 employees of two large banks. They identified two factors within this 'organisational citizenship behaviour' construct:

- altruism, representing positive gestures at specific individuals. This factor correlated with satisfaction ($r = 0.31$); and
- a more impersonal form of citizenship, termed 'compliance behaviour' (Organ, 1988, suggested that this factor should, more aptly, have been termed 'conscientiousness'). This factor also correlated ($r = 0.21$) with employees' job satisfaction.

Puffer (1987) also studied the relationships between employee attitudes and 'broader' measurements of employee performance. He measured 'extra-role' behaviour, i.e. similar acts to those envisaged by Bateman and Organ's (1983) 'citizenship behaviour' construct, by sales people whose earnings were contingent upon performance. He reported that such 'pro-social behaviour' (supervisor-measured) was significantly related to a measure of satisfaction with material rewards ($r = 0.27$).

Iaffaldano and Muchinsky (1985) cautioned against drawing too negative a conclusion from the inconsistencies reported by researchers into the relationships between job attitudes and employee behaviour. They suggested that an implicit assumption by researchers, that job satisfaction and performance were related, may in fact have contributed to the publication of many research reports disconfirming this assumption. Rosenthal (1979) noted that this 'debunking paradigm' may have led to a bias against publishing research findings which 'merely' confirmed a positive relationship between job satisfaction and employee performance.

6.3 IMPLICATIONS FOR THIS STUDY

Iaffaldano and Muchinsky (1985) suggested that while high employee satisfaction and performance were both desirable organisational objectives, efforts by managers to enhance these aspects simultaneously, through interventions such as employee participation schemes, would be assisted by there being a reliable and statistically significant relationship between them. The empirical findings to date suggest, however, that the association between employees' job satisfaction and

their performance varies from moderate to weak. Thus, Iaffaldano and Muchinsky (1985) suggested, managements of most organisations may have had to implement separate strategies to improve either job satisfaction or employees' performance.

These comments were relevant to the design of this research, which proposed to investigate the impact of both financial and decision-making participation programmes on employees' attitudes and performance. The findings of this study may therefore indicate the applicability of Iaffaldano and Muchinsky's (1985) comments to the South African gold-mining industry. They may also indicate whether it is necessary to introduce separate strategies, to enhance job satisfaction and employee performance.

The generally consistent conclusions by prior researchers that job satisfaction and employee performance were only marginally related presented a further implication for this study. Both management and labour representatives have generally supported the principle that greater productivity would result if employees were more satisfied (Katzell and Yankelovich, 1975; Koopman et al, 1987). The empirical determination that these two variables were not highly correlated therefore called into question the underlying assumptions of many organisational programmes and policies.

The present study tested a multivariate model of integrated participation programmes within the South African gold-mining industry, incorporating both attitudinal and behavioural dependent variables. In so doing, the research aimed to clarify the validity of such underlying assumptions and endeavours within that industry.

6.4 CONCLUSION

This chapter provided an overview of the theory-building and empirical-research literature into the relationships between employee attitudes and their work-related performance. It was noted that research results have generally failed to support the proposition that there are substantial and statistically

significant direct associations between these variables. Rather, the relationships may be more complex, with other factors playing moderating or intervening roles.

The following chapter will review the literature on the moderating effect of specific factors on the relationships between employee schemes of participation, worker attitudes, and their performance.

CHAPTER 7

FACTORS THAT MODERATE THE EFFECTS OF EMPLOYEE PARTICIPATION SCHEMES: A THEORETICAL AND EMPIRICAL REVIEW

7.1 INTRODUCTION

The main objective of this chapter is to review, in detail, the theory-building and empirical research literature on the factors that moderate the effects of employee participation programmes. The existence of such moderating factors has been proposed by commentators for some years (e.g. Calvin et al, 1957; Sales, 1966; Vroom, 1959). Also, various researchers have explored for and identified specific factors that moderate the effects of employee participation (e.g.Kren, 1992; Long, 1980; Schuler, 1977). In reviewing the literature relating to potential moderators of the effects of participation schemes, the following sub-objectives will be addressed:

- commentators' postulations and theory-building on the topic will be reviewed;
- the empirical findings relating thereto will be reviewed; and
- the implications of the findings for this study will be discussed.

The contents of this chapter are arranged in the sequence of the above sub-objectives. Chapter 8 will draw on many of the findings of the entire literature review, in reporting the development of a 'Model of Integrated Employee Participation (incorporating moderating effects)'.

7.2 THE LITERATURE ON FACTORS THAT MODERATE THE EFFECTS OF EMPLOYEE PARTICIPATION SCHEMES

7.2.1 PROPOSITIONS AND THEORY-BUILDING

This section discusses the theory-building and hypothesis-generating literature on potential moderators of the effects of employee participation schemes.

Schuler (1980) developed a role and expectancy model of participation in decision-making. This model, reproduced in figure 7.1, incorporated two major categories of factors that were hypothesised by Schuler (1980) to moderate the relationships between participation in decision making and employee attitudes. These categories were 'individual' and 'organisational' factors. 'Individual' factors included personality and ability variables, while 'organisational' variables included task characteristics, organisation

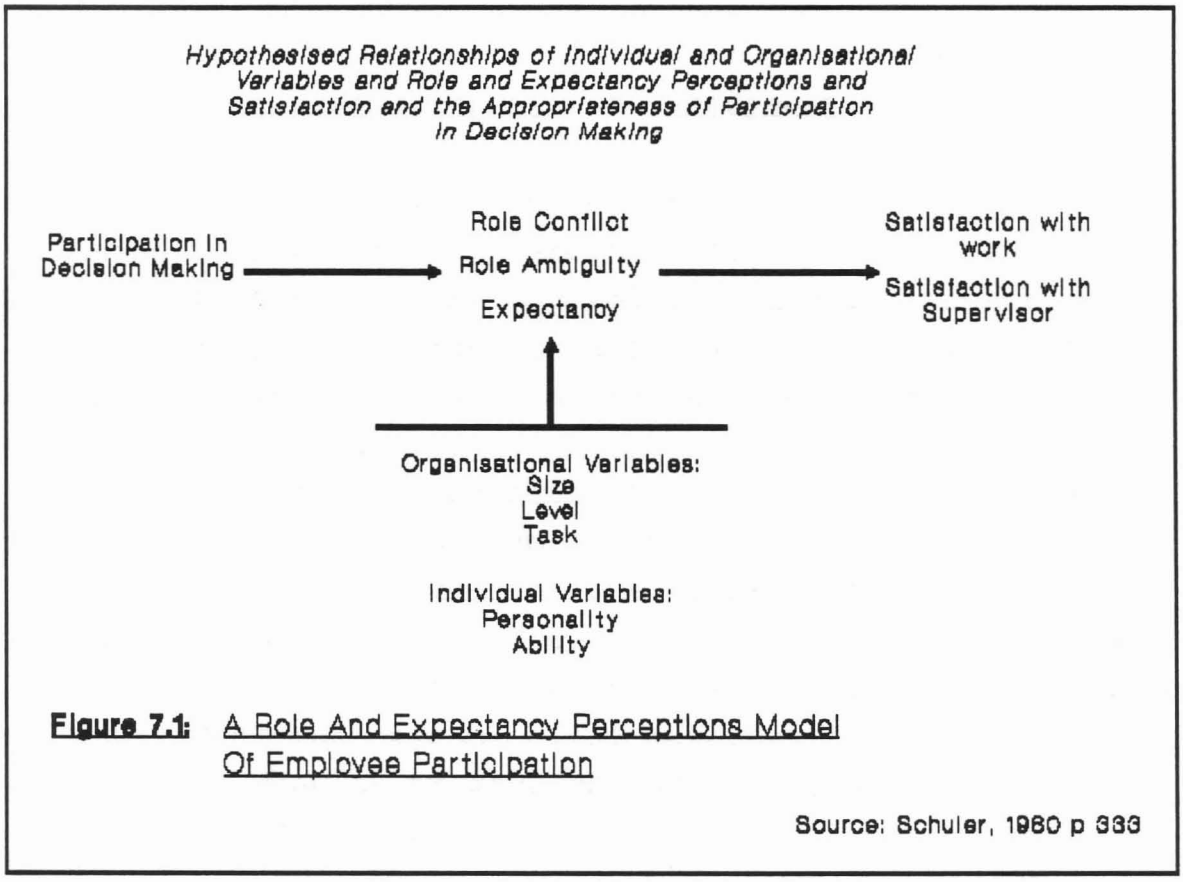

Figure 7.1: A Role And Expectancy Perceptions Model Of Employee Participation

Source: Schuler, 1980 p 333

size and the employee's level in the hierarchy. Schuler (1980) noted that there was some disagreement among commentators as to the nature and extent of the moderating effects that these variables may have exerted on the relationship between decision-making participation and job satisfaction. Nevertheless, Schuler (1980) and Vroom (1964) stated, positive relationships between employee involvement and their attitudes

and work-related behaviour would be found, regardless of the extent of such moderating effects.

Thus Schuler's (1980) 'Role and Expectancy Perceptions' model of participation in decision making included various 'organisational' and 'individual' variables, postulated to play a moderating role on the relationships between participation in decision-making and employee attitudes. The following sub-sections will review theory-building commentaries on these moderating effects, from within the literature.

7.2.1.1 The Moderating Effects of Individual Biographical Factors

The popularity of contingency theories of management has led to considerable research interest in 'individual employee biographical' factors that may moderate the relationships between aspects of the job situation and worker attitudes and performance. Various investigators (e.g. Blood and Hulin, 1967; Hackman and Lawler, 1971; Vroom, 1960) have tried to identify the moderating effects of such individual difference moderators. Pierce and Dunham (1976) summarised these research efforts and noted that much of the findings had been conflicting and ambiguous. They noted however that there was a higher level of consistency in the results of research studies into individual and psychological moderators, than was the case with the results of studies into demographic and sociological moderators.

A biographical factor postulated by a number of commentators (e.g. Kanter, 1982; Mulder, 1971) to moderate the effects of participation on worker attitudes and performance has been the level in the organisational hierarchy occupied by the 'participating' employees. Despite such differenes, many writers have advocated involvement in decision-making by employees at all levels of the firm. Walton (1985), for instance, cited the American airline 'People Express' as an example of an organisation where the management hierarchy was limited to three levels, with every full-time employee

designated as a 'manager'. Under such a commitment-based approach to the work force, status was minimized and control and lateral coordination in the organisation depended on shared goals and expertise. Also, under such a 'commitment' strategy, compensation policies tended to reflect less the old formulas of job evaluation than the heightened importance of group achievement. Walton (1991) emphasised that the extension of participative principles to the lower reaches of the organisation was centred in the belief that eliciting employee commitment would lead to enhanced performance. However various commentators and researchers (e.g. Hrebiniak, 1974; Searfoss and Monczka, 1973) have suggested that the effects of participation initiatives on work-related attitudes and performance might vary between staff at different occupational levels in the organisation.

Koopman et al (1987) noted that in the South African Cashbuild company's programme of participative management, staff at all levels of the organisation were included in the process. Koopman et al (1987) commented that this all-inclusive policy was not only an altruistic or idealistic principle, but was also based on a recognition that such a strategy was the only way that real change and transformation could be effected in the unique South African business environment. Nevertheless, Koopman et al (1987) noted that responses to participation varied at different levels of the hierarchy. Their detailed observations are discussed in the following sections.

Various other biographical factors have been postulated to moderate the effects of participation programmes. These have included the employee's age, education, tenure, rural background, religion, and marital status (Pierce and Dunham, 1976; White, 1979a) .

7.2.1.2 The Moderating Effects of Individual Personality Factors

Employees' personality characteristics have been proposed by various commentators and researchers (e.g. Abdel-Halim and Rowland, 1976; Vroom, 1960) to be potential moderators of

participation - attitude and participation - behaviour relationships. The main personality factors to be considered in this context have been: employees' need for independence, authoritarianism, and their loci of control.

Subordinates with strong independence needs and with low predispositions towards authoritarianism have been hypothesised to be more susceptible to participation in decision-making, in terms of its effect on their job satisfaction and performance.

Vroom (1960) suggested that employees with a high need for independence also experienced a higher need for, and satisfaction arising from, participation schemes. Runyon (1973) suggested that a high internal locus of control would also lead to a greater satisfaction with participation. A person with an internal locus of control is one who believes that events are not controlled by external forces or other powerful individuals, but by himself (Nunns and Argirys, 1992). He accepts responsibility for the results of his own actions, makes attempts at mastering his environment, and is relatively effective in influencing others. A person with an external locus of control believes that the world is controlled by forces outside himself and that events may thus occur independently of his own actions.

Abdel-Halim (1983) suggested that task and employee personality characteristics interacted to determine the effects of participation on job satisfaction and performance. This, he stated, was because the assumption was made that participation would have a strong positive impact on motivation when it was perceived as being instrumental in clarifying task goals or available paths to achieve those goals. Thus 'path-goal' theory assumes that subordinates with strong independence or needs for autonomy will respond to participation in similar ways to non-authoritarianist subordinates. In respect to the effects of participation, need for independence may therefore be regarded as an inverse characteristic of authoritarianism.

Vroom defined need for independence as an employee's predisposition 'to do things alone' (1960, p 16). Abdel-Halim and Rowland (1976) suggested that high need for independence employees might prefer to maintain their autonomy in their work situation, rather than seeking shared influence with their superior. Abdel-Halim (1983) suggested that this was particularly true if participation was in respect of broad decisions related to the work situation, but which did not alter the routine or structured nature of the employees' tasks. In such cases, he suggested, high levels of participation would be dissatisfying and ineffective for 'high need for independence' subordinates who were working on highly repetitive and routine tasks.

7.2.1.3 The Moderating Effect of Managerial Commitment to Employee Participation

A factor hypothesised by various commentators (e.g. Kelly and Kelly, 1990; White, 1979b) to moderate the effects of participative management has been employees' perceived extent of managerial commitment to the process. Indeed, various commentators (e.g. Russel and Dale, 1989; Wells, 1982) have suggested that a major obstacle to the achievement of the objectives of participation lies in the areas of managerial attitudes and culture. Others (e.g. Bradley and Hill, 1983; Fogarty and White, 1988; Kelly, 1982) have argued that support from top management for participation initiatives is critical for worker attitudes to be enhanced.

Kelly and Kelly (1990), in their review of seventeen case studies of worker participation, concluded that a lack of support from top management was associated with a general failure to bring about attitudinal change among the employees concerned. Collard and Dale (1989) undertook a survey of quality circles, and reported many failures due to lack of managerial support, closed management styles, or lack of recognition given to circle activities. Kelly and Kelly (1990) further commented that management may have been willing to implement and support participation initiatives only so long as they were perceived to yield profitable results, and did

not threaten their own authority. Yet these constraints, Kelly and Kelly (1990) suggested, would have seriously limited the ability of employee involvement to reduce 'them and us' attitudes amongst employees.

Klein (1987) suggested that managerial commitment impacted on employee attitudes via the amount of influence designed into the participation system by management. He further suggested that participation programmes were likely to fail if middle managers were not involved in initiating and managing them. Also, leadership and commitment from top management would, Klein (1987) suggested, lead to greater commitment to the programmes from middle managers.

Koopman et al (1987) identified management commitment as a key element of success in the South African Cashbuild company's participation programmes. They noted, however, that the communication of such top-level commitment to participation may sometimes falter. Thus, in Cashbuild, as the 'commitment' message was sent down to the lower levels of the organisational hierarchy, it appeared to become filtered and ineffective. Koopman et al (1987) further suggested that as one moved down the levels of the organisation, employees' perceptions towards the firm and its goals tended to become negative. They thus suggested that any complacency on the part of senior management, combined with resistance to change from middle managers and supervisors, might have reinforced workers' perceptions that management was merely paying lip service to full economic participation, whilst effectively maintaining the status quo.

Koopman et al (1987, p 131) stated that management should therefore accept that employee involvement is a process, rather than a simple act or event. They attributed the success of Cashbuild, in its implementation of employee participation programmes, to this recognition by the company's management. They further suggested that top managerial commitment to participation must go further than a mere declaration of intent. For instance, Koopman et al (1987) suggested, merely

mentioning it in the organisation's mission statement would not be sufficient evidence of managerial commitment.

The importance of managerial commitment towards the concept of employee participation was also highlighted by Viljoen (1986). He identified, amongst other factors, management style and mutual trust as likely to affect employees' propensities to participate.

7.2.1.4 The Moderating Effects of Aspects of the Organisation's System of Managerial Communication and Control

A particular area of interest in this study (as will be discussed further in chapter 10) was the relationship between the effects of 'integrated' employee participation schemes and employees' perceptions of key behavioural aspects of the organisation's managerial system of communication and control. Such aspects included the setting of (production and monetary) targets within the company's system of budgetary control.

Budgeting systems achieve many objectives in an organisation. Puxty (1992) stated that, in addition to establishing control, budgeting systems were forms and sources of power. Thus it is plausible that aspects of the managerial system of communication and control, as perceived by employees, might moderate the effects of participation programmes on their attitudes and performance.

Emmanuel et al (1991), drawing from expectancy theory principles, recommended the following criteria for budgetary and control systems to be effective:

- budget standards should be reasonably attainable;
- managers should participate in budget developments; and
- managers should be held responsible only for that over which they have reasonable control.

These recommendations guided the researcher in the selection of potential moderating factors, within the 'managerial system of communication and control' category, for testing in this

study. As will be discussed in chapter 10, the factors selected in this category were employees':

- perceived attainability and difficulty of their work targets;
- perceived ambiguity and fairness of their supervisors' evaluation of their performance;
- perceived extent of overlap of their assigned areas of responsibility and control; and
- perceived extent of feedback received on their performance.

A detailed review of the literature on the impact of perceived work-goal attainability on job satisfaction and performance was contained in section 3.9.1 of chapter 3, and will not be repeated here. Suffice it to say that commentators and researchers (e.g. Latham and Locke, 1979) have generally supported the proposition that 'participating' employees are inclined to accept, and subsequently to achieve, higher work-goals for themselves than are 'non-participants'.

Koopman et al (1987) reported on the target-setting procedures at the South African Cashbuild company. They reported that employees were often inclined to set higher targets than management, when they were allowed to participate in the decision-making relating thereto, and when they perceived that they shared 'equitably' in the financial success of the company.

Koopman et al (1987, p 163) also identified the need to reward employees for achieving objectives only when they had been assigned the authority and control to enable them to do so. They nevertheless identified a number of South African organisations where profit sharing and other financial participation schemes tended to be based on activities or performance areas over which the employees concerned had little or no control.

Locke (1968) proposed that performance feedback to employees would lead to enhanced effort and performance. He gave four possible reasons for this effect:

- an employee who previously did not have specific goals might, upon receiving feedback, improve his performance by a given amount;
- feedback regarding the attaining of a previous goal might induce an employee to raise his subsequent goal level;
- feedback provided to an employee, that informed him that his current level of effort was inadequate, might result in greater effort; and
- feedback might inform an employee as to the means by which he could improve his performance.

Based on Locke's (1968) proposals, and with regard to the 'cognitive' explanatory models of the effects of employee participation (reviewed in chapter 3), it is thus plausible that the provision of effective performance feedback to an employee might enhance the effects of participation on his job satisfaction and / or performance.

Feedback to employees may, in addition, be provided in respect of corporate-level financial performance. Extending the previous proposition, it is also plausible that provision of such financial information to employees will specifically moderate the effects of <u>financial</u> participation schemes. Indeed, Macintosh (1984), in an investigation of financial reporting to employees, noted that the major objective of such reporting was to increase worker participation in management. However other socio-political forces may also exert pressure for greater financial disclosure. Erwin (1983), in a review of wage bargaining issues in South Africa, stated that if companies wished to negotiate wages, they should expect trades union to demand ever greater amounts of information about the firms' costs, productivity and profitability.

The behaviour of an individual employee's supervisor, in the budget- or work-target setting process, as well as in respect of evaluating his subordinates' performance, has been

suggested as an important determinant of motivation and performance (De Coster and Fertakis, 1968; Otley, 1978). Pearce and Porter (1986) suggested that there may have been unintended negative consequences of performance appraisal systems that were overly precise. Studies undertaken by Meyer (1975) and Thompson and Dalton (1970) suggested that even employees receiving satisfactory ratings under such systems could experience significant decreases in job satisfaction and organisational commitment, when they compared their ratings to those achieved by their colleagues. They suggested that such comparative appraisal systems may therefore have generated a loss in positive feelings among the majority of the workforce, and in particular among those not ranked towards the top of the distribution of performance scores.

7.2.1.5 The Moderating Effects of Other Factors

This section briefly reviews theory-building commentaries within the literature on other potential moderating factors on the effects of participation on employee work-related attitudes and performance.

The vertical nature and rigidity of an organisational structure has been proposed to be a limiting factor in the achievement of participation's objectives. Various authors (e.g. Green and Hatch, 1990; Walton, 1985) have stated that a top-down hierarchy of managers and staff specialists could prevent employees from gaining the necessary autonomy and support for effective participation in decision-making. The traditional model of organisational structure could thus preclude effective participation. Kelly and Kelly (1990) also highlighted a lack of choice regarding participation as an obstacle to achieving a change in employees' attitudes. Workers, they suggested, often had no choice as to whether or not they might participate in involvement schemes. They suggested that where employees perceived that they were forced to participate, and adversarial attitudes to worker-management relations were prevalent, then such forced cooperation may actually have resulted in a deterioration of employee work-related attitudes.

The 'valence' of participation outcomes (e.g. monetary bonuses or enhanced communication with management) was investigated by Patchen (1970) and Ross and Zander (1957). They found that satisfaction and motivation to participate were higher if the participants attributed a high value, or valence, to the expected outcomes. Thus token participation programmes, they suggested, may actually have been counter-productive.

Koopman et al (1987) identified a number of problems encountered with the implementation of participative groups in the Cashbuild group in South Africa:

- black workers demonstrated a fundamental lack of understanding of how a business functioned;
- a wide chasm of mistrust was reported between white managers and black workers;
- the clear-cut philosophy of participation was initially seen as a threat to managers' jobs;
- managers feared the removal of their power-bases on the introduction of participation bodies;
- managers' political beliefs were threatened by the introduction of participative structures;
- black workers perceived that they would not be able to fire or reprimand other blacks due to their own community relationships;
- participating leaders in the company (called 'presidents') were viewed, by some workers, as puppets siding with management;
- it took longer than planned (three years) to institute the philosophy;
- black employees found it hard to identify and have confidence in the company's 'black advancement' policy; and
- the company was seen by some as favouring black employees and forgetting about the whites.

James and Horwitz (1992) stated that within South Africa, organisational life could not be 'normalised' until racial-based policies had been eliminated. They suggested (James and Horwitz, 1992 p 9):

> '... thus the effectiveness of worker participation as part of organisational life could be limited by race, and low levels of satisfaction can occur, even with a participation programme.'

Lawler and Mohrman (1987) suggested that participation programmes experienced a 'honeymoon effect', for an initial period after introduction. They suggested that during this period, firms would typically introduce a number of small participatory groups which were strongly motivated to produce good ideas and improvements. As a result the organisations often realised significant gains in productivity. Subsequently, however, many more groups were added and management's attention became spread more thinly over the organisation. The overall participation programme then suffered from declining interest, non-productive groups and additional costs. As part of the solution to this problem, Lawler and Mohrman (1987) suggested the addition of a financial reward component after a decision-making participation programme had become institutionalised.

In considering the possible diminishing effects of participation over time, Griffin (1988) suggested that it was perhaps the context and general nature of participation, rather than a given participative technique, that caused employee attitudes and behaviour to first increase and then subsequently diminish.

Ivancevich (1979) identified the depth of participation in decision making as a potential determinant of its effects on worker attitudes and performance. He stated that participation depth may be 'shallow', e.g. in decisions about work-place colour schemes or about the circulation of a company newsletter. Alternatively, participation may be 'deep' in such decisions as promotion, salary and other major corporate strategies.

7.2.2 EMPIRICAL STUDIES: HYPOTHESIS-TESTING RESEARCH

This section reviews the literature on hypothesis-testing research undertaken into the moderating impact of the above factors on the effects of employee participation.

7.2.2.1 Results of Research Into the Moderating Effects of Individual Biographical Factors

Various studies have shown organisation level to be an important moderating variable of participation's effects. Schuler (1977) examined the relationships between role perceptions and employee satisfaction and performance, and found that organisational level and participation in decision making exerted moderating effects thereon. Schuler (1980) further tested his 'role and expectancy perception' model of participation in decision-making (see figure 7.1) on 382 employees of a large public utility firm. He found significant support for all the hypothesised relationships therein, including the moderating role of an employee's seniority in the organisational hierarchy.

Hrebiniak (1974) found that job level had important effects on work-related attitudes in a participative environment, as did Searfoss and Monczka (1973). French and Rosenstein (1984) also determined that an employee's authority and status in a firm was a moderator of the ownership - job attitudes relationship.

Dachler and Mobley (1973) found that a significant relationship between goal difficulty and performance was moderated by employee tenure. They thus suggested that long-tenure employees perceived desirable outcomes to be contingent upon participation, whereas shorter-tenure employees did not. This was not, however, supported by Ivancevich (1979), in his study of participation among project engineers. He found that there was no significant difference between the effects of such participation, when measured by decisional saturation, between the longer- and shorter-tenured employees.

Aldag and Brief (1975) investigated seven potential moderator variables of the effects of participation. These included the employee's level of education, tenure, and tendency towards authoritarianism. Inconsistent results were obtained. Similarly, White (1979b) was unable to establish consistent moderating effects by any of 73 potential moderator variables, including many biographical factors, across fourteen research sites.

7.2.2.2 Results of Research Into the Moderating Effects of Individual Personality Factors

Following early studies by Vroom (1959, 1960), Blood and Hulin (1967), Hulin and Blood (1968), and Hackman and Lawler (1971), many researchers have attempted to extend or confirm the moderating effects of individual personality moderators, on the effects of participation programmes. Unfortunately much of this research has proven to be conflicting and ambiguous, as noted by Pierce and Dunham (1976). For example, Vroom (1959, 1960) showed that authoritarianism and need for independence moderated the relationship between participation and satisfaction and performance among 108 delivery personnel. Tosi (1970) and Searfoss and Monczka (1973) were however unable to replicate the moderating effects identified by Vroom (1959, 1960). Abdel-Halim (1983) found, contrary to his expectations, that higher need-for-independence subordinates were more satisfied with high participation - but only for certain non-repetitive tasks. White (1979b) also noted the inconsistency of results throughout this field of research.

Mitchell (1973) suggested that individuals with a low internal locus of control might prefer a directive rather than a participative approach to their work, and this was borne out in a subsequent empirical research into the effects of participation among 900 employees of a public utility (Mitchell et al, 1975). This led Mitchell et al (1975) to suggest that 'internally controlled' employees were generally more satisfied with their jobs, were more likely to be in managerial positions, and were more satisfied with a

participatory management style than were employees with external loci of control.

The moderating effects of authoritarianism and need for independence on the relationship between perceived participation in the budget process and motivation were investigated by Searfoss and Monczka (1973). Although not significant, moderator effects were identified. Other researchers also found support for hypotheses that subordinates with strong rather than weak independence needs, and with low predispositions towards authoritarianism, were more susceptible to the effects of participation in decision-making on their satisfaction and performance (e.g. Mitchell et al, 1975; Vroom, 1960). However Tosi (1970) and Abdel-Halim and Rowland (1976) were unable to find support for these propositions.

7.2.2.3 Results of Research Into the Moderating Effect of Managerial Commitment to Employee Participation

The potential moderating effect of employees' perceptions of management's commitment to the participation process has been investigated by a number of researchers. White (1979a), in his survey of 23 companies which had adopted Scanlon Plans, found that managerial and chief executive officer's attitudes significantly affected the outcomes thereof. Kelly and Kelly (1990) also identified lack of institutional support and lack of trust in management as a factor leading to poor results from the introduction of participation schemes. Miles and Ritchie (1971) and Miles (1975) found that higher degrees of participation and higher satisfaction resulted when workers perceived that management had confidence in them. Wallace (1971) and Ruh, Wallace and Frost (1973) also found that managerial attitudes towards participative management correlated significantly with whether or not participative plans were retained.

Hill (1991) undertook research into the success and failures of introducing quality circles in the United Kingdom, and identified that circles collapsed as a result of inadequate

organisational design and lack of managerial commitment. He recommended 'Total Quality Management' as the solution because, he suggested, this would institutionalise participation on a permanent basis, and managerial as well as shop-floor employees would have more opportunities to participate in decision-making.

In addition to finding support for the hypothesised relationship between managerial commitment to participation and the success thereof, a number of researchers have also established a generally low level of managerial support for participative principles. Krishnan (1974) concluded, from a survey of 90 manufacturing organisations in the United States, that the majority of business executives did not believe that employees should have the right to participate in making organisational decisions. The reluctance of management to use or support participation was also highlighted by Rosen and Jerdee (1978) in a study of 143 bank employees. The study ascertained that employee participation was encouraged to a greater extent when the underlying decisions were to be implemented on a trial, as opposed to a permanent, basis. In the South African context Human and Icely (1987), in a study of two companies, identified significantly negative attitudes among white (mainly skilled) workers to the upward occupational mobility of black (mainly unskilled) employees. Human and Icely (1987, p 22) commented that these findings reaffirmed:

> '... the need for organisations to consider the organisational environment or culture in which black people are expected to work. Without due consideration of this aspect, without a holistic strategy which addresses white attitudes as well as the needs of black employees, the process of black mobility will be impeded and unnecessarily retarded.'

Human and Icely's (1987) comments were particularly relevant to the South African mining industry, where the vast majority of unskilled and semi-skilled workers are black, and

supervisors, artisans and management staff are predominantly white.

The findings of a study by James and Horwitz (1992) suggested that South African managers' fears of losing control in the workplace, as a result of introducing participation schemes, may be well founded. In their study of 150 manufacturing employees, both workers and managers stated that management control had not yet been compromised by participation. However the interviewed workers generally felt that such a reduction in managerial control was necessary.

The results of James and Horwitz's (1992) research clearly indicated the importance of managerial attitudes towards participation, in ensuring that the schemes were well perceived by the workforce. Workers were requested to rank the factors that they felt were most important in 'influencing participation'. They ranked the 'attitude of the person I work for' as the most important factor, and 'trust between employee and manager / supervisor' as the second most important item.

7.2.2.4 Results of Research Into the Moderating Effects of Aspects of the Organisation's System of Managerial Communication and Control

This section reviews reported prior research into the impact of aspects of an organisation's system of managerial communication and control on the effects of participation (except for the reported research into the effects of work-target attainability on employees' motivation and performance, previously reviewed in chapter 3).

Accordingly, the research reports reviewed here focused on the potential moderating effects on the effects of participation of the following factors:

- the perceived fairness and ambiguity of a supervisor's evaluation style;
- the perceived overlap of assigned areas of responsibility and control; and
- the perceived extent of performance-related feedback.

De Coster and Fertakis (1968) investigated 'budget-induced pressure' (i.e. negative perceptions about an employee's work, caused by the firm's system of budgeting) and its relationship to supervisory behaviour by surveying 31 supervisors and 90 of their subordinates in manufacturing firms. Relevant conclusions of this study were that 'budgetary pressure' was induced by non-participation in the budgeting process, and that supervisory behaviour which was inconsistent, improperly motivated, and misunderstood by subordinates, may have led to worker dissatisfaction. The impact of supervisory characteristics on goal acceptance was also found by Oldham (1975) to be significant. Otley (1978) studied the effects produced by the differential use of budget information by managers, in evaluating their subordinates' performance. He found that particular methods of budget use were likely to affect managerial behaviour significantly, but not in any uniform measure. Differences were caused by variations in shared norms and values between workers and subordinates.

The empirical findings regarding the effects of performance feedback on the relationships between participation, and worker attitudes and performance, have been contradictory. Hundal (1969) found a relationship between feedback and increased productivity amongst industrial workers. Chapanis (1964) failed to find such a relationship in an experiment of students working on a repetitive job. Miller (1965) did, however, find that feedback to manufacturing employees in the General Electric Company resulted in enhanced performance. He also determined that such an effect was not sustained for employees who were not receiving financial incentives. Kolb et al (1968) studied the effects of performance feedback in conjunction with participation in goal setting. Greater positive changes in performance levels were noted in groups that were participating in setting their work goals, than in groups of subjects that were not.

Cook (1967), Steers (1976) and Muchinsky (1977) all found support for positive relationships between increased

performance feedback, employee motivation and performance. Locke (1983) noted that feedback,:

> '.. a key element of job enrichment, is clearly relevant to motivation since knowledge of one's performance can be used, and often is used, to set goals'.

Pearce and Porter (1986) studied the relationship between job satisfaction and perceived fairness of performance appraisal feedback, among civil service employees in the United States' Department of Defence. They discovered that a significant drop in attitudes towards the organisation occurred within two months of receipt of relatively low ratings by employees.

Other researchers have found support for the motivational impact of performance feedback, including Greller, (1980), Ilgen, Fischer and Taylor (1979), and Ivancevich and McMahon (1982). McCarty (1986) found that men and women responded to positive feedback by increasing their performance expectancies.

Rockness (1977) found a significant relationship between employees' job satisfaction and their receipt of formal feedback of performance results. Steers (1976) also found that job satisfaction was significantly related to performance feedback, in his study of female supervisors of a major public utility.

7.2.2.5 Results of Research Into the Moderating Effects of Other Factors

This section briefly reviews the empirical hypothesis-testing research into other potential moderators of the effects of employee participation schemes.

Hochner and Granrose (1985) surveyed 943 supermarket-chain employees facing a shut down, to ascertain their propensity to participate in an E.S.O.P. scheme. The study established that workers who chose to participate differed from non-participants in both situational and individual aspects. Those motivated to participate appeared to differ from non-

participants in having a higher rate of unemployment and greater financial resources. They also were rated higher on entrepreneurial inclinations.

Ruh et al (1975) studied the relationships between job involvement, personal values, participation in decision-making and job attitudes in nineteen American manufacturing organisations, all of which operated some form of Scanlon plan. Significant positive effects of the plans were identified, but individual differences and job characteristics affected these results. Specifically, moderator effects were identified on the relationships between improved employee attitudes and religious affiliation, education level, and place of residence.

Long (1980) studied three firms that had recently converted to employee ownership, and found that firm size was a significant moderator. This was consistent with the proposition within Schuler's (1980) model (see figure 7.1), that 'organisation size' would moderate the effects of decisional participation by employees.

Kren (1992) investigated the effect on the budgetary participation - managerial performance relationship of information and environmental volatility moderators, and found that moderator effects did exist.

The effect of time on participatory management was studied by Griffin (1988). He found that employee attitudes, motivation and performance all improved over an 18 month period and then fell back to their initial levels. This provided support for the 'honeymoon effect' associated with the introduction of participation programmes, proposed by Lawler and Mohrman (1987), and previously discussed in section 7.2.1.5.

7.3. IMPLICATIONS FOR THIS STUDY

The implications of the above theory-building commentaries and empirical research findings to this study are discussed in this section.

Prior researchers (e.g. Lawler, 1970; Sandler, 1974; Schein, 1971) have argued strongly that future research into organisational and behavioural matters should not look exclusively to either individual differences or job characteristics as primary determinants of employee behaviour. Rather, they suggested that a more productive approach would be to investigate the interactions between individual differences and organisational and work aspects. White (1979b) concluded his study into the potential moderating impact of 73 variables on the effects of participation schemes by suggesting that:

> 'Perhaps a more fruitful direction for research is the delineation of situational rather than individual contingencies that moderate the effect of job characteristics on worker responses' (1979, p 42).

This research responded to this suggestion by including selected behavioural aspects of the managerial system of communication and control, as potential moderators of the relationships between participation, job satisfaction and employee performance. Further, and arising from this review, it was decided to include employees' personality factors and their perceptions of managerial commitment to participation as potential moderators.

7.4 CONCLUSION

This chapter reviewed the literature on the potential moderating effects of various 'individual' and 'situational' factors on the relationships between employee participation, and their work-related attitudes and performance. These theories and empirical findings were consolidated by the researcher in the development of a 'Model of Integrated Employee Participation (incorporating moderating effects)', which will be described in the following chapter. Major components included in the model influenced the research design and the selection of the hypotheses tested within the study.

CHAPTER 8

THE DEVELOPMENT OF A MODEL OF INTEGRATED EMPLOYEE PARTICIPATION

8.1 INTRODUCTION

Chapters 2 to 7 provided an in-depth review of the theory-building commentaries and empirical hypothesis-testing literature on employee participation schemes. The main objective of this chapter is to consolidate major elements of this literature review, in reporting the development of a model of 'Integrated Employee Participation (incorporating moderating effects)'. Many of the proposed relationships within the model were subsequently incorporated into the design and hypotheses of this research study.

At its heart, the model described in this chapter (see figure 8.1) suggested that, subject to certain moderating conditions, simultaneous formal participation in the employer's profits and in work-related decision-making would lead to a perception of 'quasi-ownership' in the minds of employees. Such 'quasi-ownership' was defined, for purposes of this study, as a psychological feeling of ownership and control arising from integrated participation.

The model proposed that, arising from such perceptions of 'quasi-ownership', an integration of the employees with the firm would result, leading to behavioural and organisationally relevant outcomes. This will be referred to hereafter as both a model and construct of 'Integrated Employee Participation'.

The model incorporated hypothesised relationships between aspects of the work situation (the object, form and extent of participation; managerial communication and control system aspects; and management's commitment to participation), and employee perceptions, attitudes and performance. These relationships were further proposed, within the model, to be moderated by employees' biographical and personality

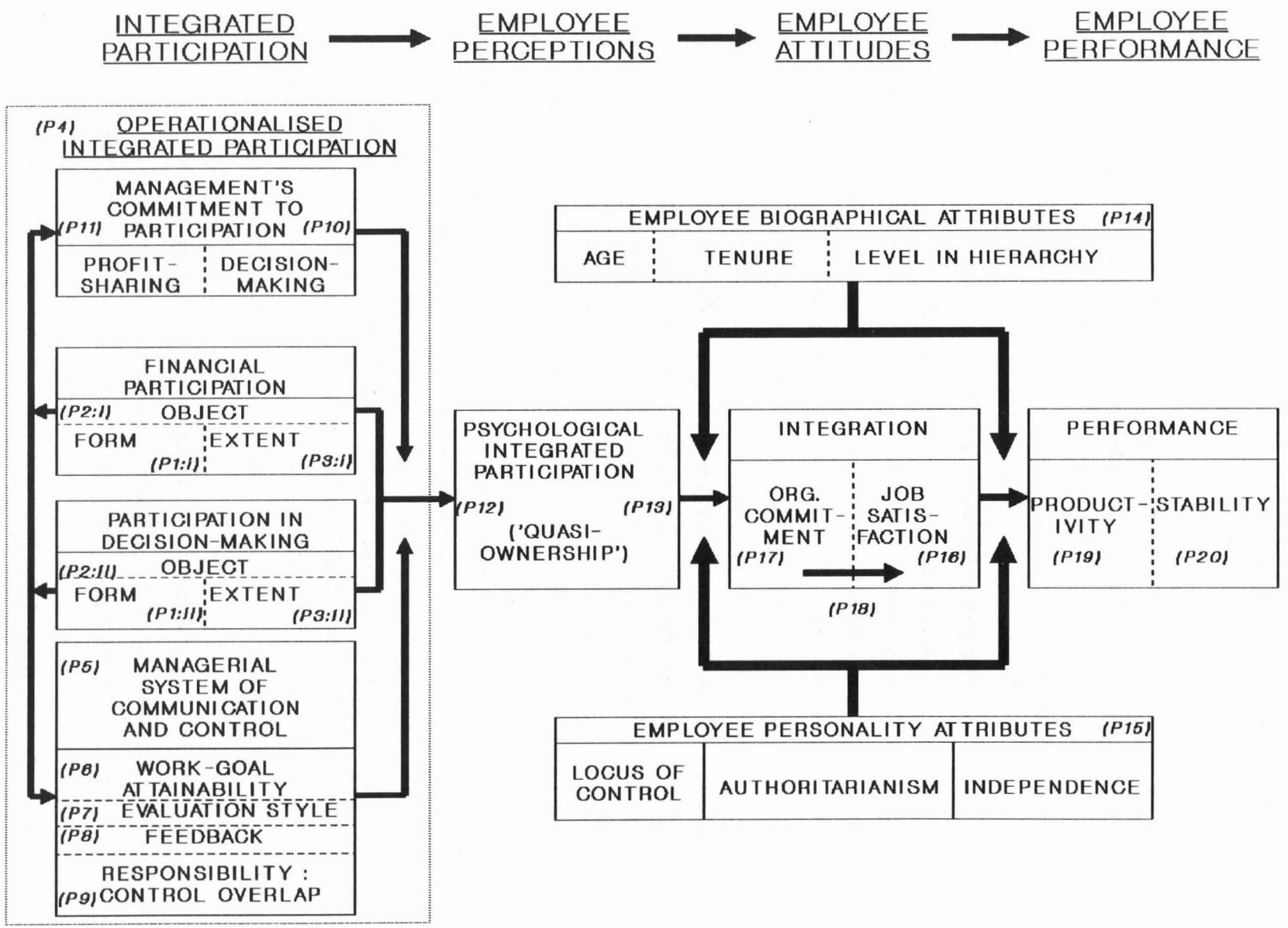

Figure 8.1: A Model of Integrated Employee Participation (incorporating moderating effects)

attributes. The numbered propositions are labelled on figure 8.1, and will be discussed in sequence in the following sections.

8.2 PROPOSITIONS ARISING FROM THE LITERATURE REVIEW

8.2.1 PROPOSITION 1: THE FORMS OF PARTICIPATION

Chapter 2 reviewed the many variates of financial and decision-making participation schemes. Reference was made therein to the research of Cotton et al (1988), who demonstrated that different forms of participation were associated with markedly different outcomes. Few other researchers have reported conceptual and / or empirical work that compared or contrasted the behavioural effects of participation schemes across forms. There is also a near vacuum of understanding of employee responses, or of managerial commitment differences, across different forms of participation. Nevertheless, extending the propositions and findings of Cotton et al (1990), it appeared plausible that the forms of financial and decision-making participation instituted within an 'Integrated Employee Participation' programme would affect the outcomes thereof.

Koopman et al (1987) noted, in connection with the 'integrated' participation programmes instituted at the South African Cashbuild company, that managers feared the removal of their power-bases and felt threatened by the new participative philosophy. It thus appeared plausible that management's commitment to an 'Integrated Participation' scheme might, itself, be affected by the characteristics of the programme.

Further, as discussed in chapter 7, aspects of the organisation's system of managerial communication and control may be affected by a participative management philosophy (Koopman et al, 1987; Latham and Locke, 1979). It thus appeared plausible that the characteristics of an 'Integrated Employee Participation' scheme may have an influence on the design of communication and control system aspects.
Thus it was proposed that:

Proposition 1:

The forms of financial and decision-making participation introduced within an 'Integrated Employee Participation' programme have an impact on:

- **the attitudes and behavioural responses of employees;**
- **the commitment of management to the programme; and**
- **the design and implementation of the firm's managerial system of communication and control.**

8.2.2 PROPOSITION 2: THE OBJECT OF PARTICIPATION

In addition to the various forms of financial and decision-making participation that may constitute an 'Integrated Participation Scheme', the object of the programme (e.g. to address collective bargaining demands, to secure additional employee benefits, or to achieve organisational advantages such as a reduction of employee turnover) may also vary. These factors may well impact on the process and outcomes of the scheme, at least initially. Klein and Hall (1988), in a study of E.S.O.P. schemes in the United States, concluded that when a plan was established for employee-centred rather than organisational-based strategic reasons, employees were more satisfied with the schemes.

It thus appeared plausible that the object of an 'Integrated Employee Participation' scheme might affect the outcomes thereof. Further, extending the arguments in section 8.2.1 above, it also appeared plausible that the object of the scheme might affect management's commitment thereto, and aspects of the organisation's communication and control system.

It was therefore proposed that:

Proposition 2:

The object of an 'Integrated Employee Participation' programme has an effect on:

- **the attitudes and behavioural responses of employees;**
- **the commitment of management to the programme; and**
- **the design and implementation of the firm's managerial system of communication and control.**

8.2.3 PROPOSITION 3: THE EXTENT OF PARTICIPATION

Chapters 3 and 4 reviewed reported empirical research which supported the propositions, in respect of decisional and financial participation respectively, that increases in the extent of participation positively affected employee attitudes. It thus appeared plausible that the extent of both decisional and financial involvement offered to employees within an 'Integrated Employee Participation' scheme might also affect the outcomes thereof. Further, extending the arguments in section 8.2.1 above, it appeared plausible that the extent of participation might also affect management's commitment thereto, as well as aspects of the organisation's communication and control system.
It was therefore proposed that:

Proposition 3:

The extent of financial and decision-making participation provided within an 'Integrated Employee Participation' programme has an impact on:

- **the attitudes and behavioural responses of employees;**
- **the commitment of management to the programme; and**
- **the design and implementation of the firm's managerial system of communication and control.**

8.2.4 PROPOSITION 4: OPERATIONALISED INTEGRATED PARTICIPATION

Bernstein (1979) identified several factors that he suggested were necessary for the establishment and retention of 'workplace democracy'. These, he suggested, included: 'participation in decision making', 'frequent feedback of economic results', 'full sharing of management-level information', and 'a particular set of attitudes and values.. (that support a).. participatory / democratic consciousness.'

In determining the major elements of a model of 'Integrated Employee Participation', it was thus proposed that such schemes should bestow at least three basic rights on employees:

- the right to participate in the financial fortunes of the employer, in a predictable and certain manner;
- the right to exercise a degree of influence and / or control over decisions in the employer firm; and
- the right to obtain information about the status (financial and otherwise) of the employer.

These fundamental rights were similar to the elements of an 'ownership' construct proposed by Pierce, Rubenfeld and Morgan (1991). These critical dimensions were labelled, for purposes of developing this model, as 'equity', 'influence', and 'information'. In addition, as discussed in chapter 7, the extent of management's commitment to participation has been proposed and demonstrated to be a critical determining factor of the success or failure of participation programmes. Thus it was proposed that:

Proposition 4:

'Operationalised Integrated Participation' can be regarded as a multidimensional variable consisting of four critical dimensions: equity, influence, information, and management's commitment.

Propositions 1, 2 and 3 referred to the form, object and extent of both financial and decisional participation offerred within a programme of 'Integrated Employee Participation'. The

dimensions of equity and influence within proposition 4 were therefore already incorporated into the model. The discussion and inclusion of the latter dimensions (information and management's commitment) now follows.

8.2.5 PROPOSITION 5: THE MODERATING IMPACT OF ASPECTS OF THE ORGANISATION'S SYSTEM OF MANAGERIAL COMMUNICATION AND CONTROL

Emmanuel et al (1991) stated that the provision of appropriate and timeous information to a firm's employees should be viewed as only part of a broader goal of establishing an effective managerial system of communication and control. They identified the following elements as essential in such a system:

- the setting of organisational goals (work targets or budgets) at appropriate levels of perceived attainability;
- the establishment of an appropriate style of evaluation of an employee's performance; and
- the provision of timeous and suitable feedback to employees regarding their own performance, as well as those of their departments / work areas and of the firm as a whole.

Questions regarding the design and implementation of an appropriate management system of communication and control (incorporating the above dimensions) have been exercising academics for many years. For example, the relationships between participation and the behavioural aspects of management accounting systems of budgetary control were discussed by Hopwood (1976). He commented:

> 'Increasingly, however, budgeting is being seen in much wider terms than a mere technique and procedure. It is being seen as part of a process which both influences, and in turn is influenced by, managerial and employee attitudes and behaviours. The need for involvement, the commitment, and not the least, the participation of the lower members of the organization is viewed as a vital feature of the more modern approaches to budgeting.

> Indeed, there is a widespread belief, and belief is the appropriate term, that participation of subordinates in setting their budgets is a panacea; a cure for all the ills which have been associated with traditional budgeting systems.'

The concept of involving employees in the setting of targets relating to their work was therefore, according to Hopwood (1976), equally desirable for unskilled and semi-skilled workers (e.g. in the mining industry) as it was for departmental supervisors and administrative managers (e.g. shift bosses and mine surface personnel). At all levels in the hierarchy, employees should be made aware of performance levels expected of them, and be provided with suitable feedback as to the subsequent attainment, or otherwise, of those work objectives. The constituent elements of a management system of communication and control identified herein may therefore be significant moderators of the effects of 'Integrated Employee Participation', for workers at all levels of the organisation's hierarchy.
It was therefore proposed:

Proposition 5:

> **Aspects of the organisation's managerial system of communication and control moderate the effects of an 'Integrated Employee Participation' scheme.**

Propositions 6, 7, 8 and 9 considered the moderating impact of specific aspects of an organisation's managerial system of communication and control. These are discussed in the following sub-sections.

8.2.5.1 Proposition 6: The Moderating Impact of Work-Goal Attainability

Section 3.9.1 of chapter 3 reported on prior research (e.g. Latham and Locke, 1979; Latham and Steele, 1983) which indicated that employees were likely to be more satisfied and motivated by higher work-goals in a participative environment.

It was therefore plausible that the attainability of employees' work targets might moderate the effects of 'Integrated Employee Participation' schemes.
It was therefore proposed:

Proposition 6:

The attainability of employees' work-goals moderate the effects of 'Integrated Employee Participation Schemes'.

8.2.5.2 Proposition 7: The Moderating Impact of Supervisors' Evaluation Styles

The behaviour of an individual's supervisor, in respect of the work-target setting process, and in respect of performance evaluation of his subordinates, has been suggested as an important determinant of workers' motivation and performance (DeCoster and Fertakis, 1968). As reported in section 7.2.2.4 of chapter 7, empirical research findings (e.g. Oldham, 1975; Otley, 1978) have supported this proposition.

It thus appeared plausible that the style of a supervisor's performance evaluation may moderate the effects of 'integrated participation' initiatives.
Thus it was proposed:

Proposition 7:

The effects of 'Integrated Employee Participation' schemes are moderated by the evaluation style of employees' immediate supervisors.

8.2.5.3 Proposition 8: The Moderating Impact of Performance and Information Feedback

The extent and frequency of feedback provided to an employee regarding his own, and his employer's, performance have also been proposed as important factors affecting job attitudes. Section 7.2.2.4 of chapter 7 reviewed the literature in this area. Researchers (e.g. Cook, 1967; Muchinsky, 1977; Steers, 1976) have generally found support for hypothesised positive relationships between feedback extent and improved employee attitudes.

It therefore appeared plausible that the extent and frequency of such feedback provided to employees might moderate the effects of 'Integrated Employee Participation' schemes.
It was therefore proposed:

Proposition 8:

The effects of 'Integrated Employee Participation Schemes' are moderated by the extent and frequency of information received by employees in respect of:

- **their own performance;**
- **the performance of their departments / work sections; and**
- **the performance of the company as a whole.**

8.2.5.4 Proposition 9: The Moderating Impact of the Overlap of Assigned Areas of Responsibility and Control

Emmanuel et al (1991) recommended that managers should be held responsible only for matters over which they were assigned reasonable control. It therefore seemed plausible that this factor might act as a moderator of the effects of 'integrated' employee participation schemes.
Thus it was proposed:

Proposition 9:

The effects of 'Integrated Employee Participation' Schemes are moderated by the extent of overlap of workers' assigned areas of responsibility and control.

8.2.6 PROPOSITIONS 10 AND 11: THE EFFECTS OF MANAGEMENT'S COMMITMENT TO EMPLOYEE PARTICIPATION

As discussed in section 7.2.1.3 of chapter 7, a number of theoretical commentators have proposed that managerial commitment to employee participation will moderate the effects thereof. These have included Klein (1987), who tested three alternative models of employee ownership, and found that there was a significant relationship between the extent of managerial commitment to such ownership, and employee attitudes. He thus suggested that any lack of commitment from

management towards employee participation schemes was likely to negatively impact on the desired results thereof.

Accordingly, it seemed plausible to extend this argument by suggesting that the degree of commitment towards 'Integrated Employee Participation' displayed by management might affect the results thereof. Such expressed commitment might also influence the amount, timing, and nature of information that was shared with the employees, and the amount and timing of any funding for the participation programmes.
Thus it was proposed:

Proposition 10:

The extent of managerial commitment to 'Integrated Employee Participation' schemes moderates the effects thereof.

Proposition 11:

There is a positive association between the extent of managerial commitment to 'Integrated Participation' and each of the other elements of the 'Operationalised Integrated Employee Participation' programme (profit-sharing, participation in decision-making, and the communication and control of organisational information).

8.2.7 PROPOSITIONS 12 AND 13: THE STATE OF PERCEIVED ('PSYCHOLOGICAL') PARTICIPATION

Key features of this model were firstly, the proposition that participation existed as a multidimensional construct; and secondly that it operated in both a formal (operationalised) state and as a psychologically experienced phenomenon. It was proposed that these two states ('operationalised' and 'psychological' participation) were inter-related in determining the effects of 'Integrated Employee Participation' programmes.

Koopman et al (1987) also identified employee perceptions as the key to corporate commitment. They suggested that the way

that individual employees interacted with their work environment determined whether perceptions of that work environment were negative or positive. These perceptions in turn influenced work-related behaviour to a marked extent. Positive perceptions, Koopman et al (1987) suggested, should engender enthusiasm and commitment to achieve corporate goals and objectives. Negative perceptions might generate counter-productive behaviours even, they suggested, to the extent of industrial sabotage (Koopman et al, 1987 p 93).

As mentioned in chapter 3 (section 3.10.3) Miller and Monge (1986) studied the relationships between actual and perceived participation in decision-making, and employee attitudes and behaviours. Their results suggested that perceived participation was a stronger predictor of such employee responses than the formal structure of the participation schemes. Further studies by Gurdon (1978) and Hammer and Stern (1980) suggested that the formal aspects of ownership or participation operated through their effect on employee perceptions and attitudes, rather than directly impacting on behaviours.

It was therefore plausible that an interaction between the two dimensions of participation (formal and perceived) might explain the attitudinal and behavioural outcomes of an 'Integrated Employee Participation' programme. It was therefore proposed that:

Proposition 12:

The formal implementation of 'Integrated Employee Participation' is positively related to a state of psychological participation in employees.

Proposition 13:

The formal implementation of 'Integrated Employee Participation' achieves its effects on employee attitudes and behaviour through its influence on employee perceptions.

8.2.8 INDIVIDUAL MODERATORS OF THE EFFECTS OF PARTICIPATION

The literature, as reviewed in chapter 7, suggested that participation would not influence employee attitudes and behaviour independently. Rather, there were a number of individual biographical and personality variables which might have intervened in, or moderated, the process. The following sub-sections will consider these potential moderating factors.

8.2.8.1 Proposition 14: The Moderating Effects of Employee Biographical Attributes

Section 7.2.2.1 of chapter 7 reviewed the empirical research literature on the moderating effects of individual biographical attributes on the effects of employee participation schemes. Various researchers have found support for hypothesised moderating effects by employees' job level (Hrebiniak, 1974), by tenure (Dachler and Mobley, 1973), and by their age and education (White, 1979a).

It therefore seemed plausible that the seniority, age and tenure of employees may moderate the effects of 'Integrated Employee Participation' schemes.
It was therefore proposed:

Proposition 14:

The effects of 'Integrated Employee Participation' programmes are moderated by each employee's:

- **age;**
- **tenure; and**
- **level in the organisation's hierarchy.**

8.2.8.2 Proposition 15: The Moderating Effects of Employee Personality Attributes

Section 7.2.2.2 of chapter 7 reviewed reported research findings into the moderating effects of various personality constructs on the effects of employee participation. Researchers have reported such moderating effects by employees' needs for independence (Abdel-Halim, 1983; Vroom, 1959 and 1960), tendencies towards authoritarianism (Mitchell et al, 1975; Searfoss and Monczka, 1973), and by their loci of

control (Mitchell et al, 1975). It was therefore plausible that these 'personality' variables might also moderate the effects of 'Integrated Employee Participation' programmes. It was therefore proposed:

Proposition 15:

The effects of 'Integrated Employee Participation' schemes are moderated by the personalities of employees in terms of their:

- **tendency towards authoritarianism;**
- **work locus of control; and**
- **need for independence.**

8.2.9 PROPOSITIONS 16, 17 AND 18: WORKER INTEGRATION

Studies undertaken by researchers including Hammer and Stern (1980), Lawler (1977), and Rhodes and Steers (1981) suggested that employees who experienced perceived 'organisational ownership' became further integrated into the employer firm. This psychological bonding was evidenced by the enhancement of such attitudes as organisational commitment, and the congruence of interests or goals that linked management and employees. Lawler (1977) also suggested that a perceived common interest intervened in the relationship between participation and attitudinal and performance outcomes.

The literature has detailed various attitudinal and behavioural effects of participation. Most proponents of such schemes have argued that they will lead to favourable employee attitudes (see chapters 3 and 4). However research results have produced mixed findings in this regard, indicating a more complex relationship than simply a 'main effect' between participation and employee attitudes and performance.

Several researchers have identified a positive relationship between participation and job satisfaction. Long (1982) in contrast, reported a significant fall in job satisfaction pursuant to the introduction of a participation scheme. However it appeared plausible that such a relationship should exist, i.e. there should be a positive association between the

perceived extent of 'Integrated Employee Participation' and job satisfaction.
It was therefore proposed:

Proposition 16:

There is a positive relationship between the perceived extent of 'Integrated Participation' and levels of employees' job satisfaction.

Long (1978a) suggested that organisational commitment was also a dependent variable that would be positively affected by employee participation schemes. It was plausible that this would also apply in the case of 'integrated' programmes. Therefore it was proposed:

Proposition 17:

There is a positive relationship between the perceived extent of 'Integrated Participation' and levels of employees' organisational commitment.

However Long (1980) also suggested that organisational commitment was an intervening variable in the relationship between ownership and job satisfaction. He argued that organisational commitment was a key factor in determining the effects of participation schemes. Bateman and Strasser (1984) also identified a link between job satisfaction and commitment.
Thus it was proposed:

Proposition 18:

Employees' perceived extent of 'Integrated Participation' increase their levels of job satisfaction by enhancing their levels of organisational commitment.

8.2.10 PROPOSITIONS 19 AND 20: THE BEHAVIOURAL EFFECTS OF PARTICIPATION

Chapters 3 and 4 reviewed, in detail, the hypothesised behavioural effects of employee participation in profits and/or decision-making. These effects included improved

productivity and performance and reduced staff turnover. Numerous research studies, reported in the literature review (see chapters 3, 4 and 5), have been undertaken to test these hypotheses. As discussed in the review, the results of such research have been mixed. Nevertheless, it appeared plausible that the effects of 'Integrated Employee Participation' programmes might include enhanced levels of employee productivity and stability.
It was therefore proposed:

Proposition 19:

There is a positive relationship between employees' perceived extent of 'Integrated Participation' and their levels of productivity. This occurs through the enhancement of job satisfaction and commitment to the organisation.

Proposition 20:

There is an inverse relationship between employees' perceived extent of 'Integrated Participation' and their levels of absenteeism. This occurs through the enhancement of job satisfaction and commitment to the organisation.

8.3 THE IMPLICATIONS OF THE MODEL FOR THIS STUDY

This model proposed that 'Integrated Employee Participation' was an objectively verifiable multidimensional construct, operating in both formal and perceived forms. The model further proposed that increases in employees' perceived extent of decisional and financial participation would generate feelings of ownership and control which might positively affect work attitudes and behaviour.

The model was exploratory in nature. It was acknowledged that there may have been reciprocal effects (e.g. commitment leading to 'quasi-ownership', or even improved employee and organisational performance leading to the introduction of participation schemes). Also, additional main effects may have existed between the identified variables (e.g. a participation

- productivity relationship). For reasons of parsimony, exogenous variables (e.g. the influence of unions, and the political affiliations of employees), that may impact on the effects of participation programmes, were not included in the model. The possibility also existed of specification error in terms of the variables identified, the relationships described, and the directions of causal relationships.

Empirical testing of the propositions within this model should lead to refinements, elaboration and more detailed conceptual advancement. Further, as recommended by Kelly and Kelly (1990), research into participation programmes should be made under longitudinal and controlled conditions. There was thus a need to study both short- and long-term cause and effect relationships between the variables in this model.

There were several individual biographical and personality attributes proposed as moderators of the effects of 'Integrated Employee Participation' on employee attitudes and performance. It must however be acknowledged that there were several additional uncontrolled-for factors that might potentially have moderated employee reactions to the participation programmes.

8.4 CONCLUSION

The model described in this chapter awaited empirical testing and refinement. The hypothesis-testing explanatory section of this research study aimed to test many of the hypothesised relationships of the model described here.

Nevertheless, prior to the empirical testing of the model, there were a number of tentative implications for management that arose from it:

- the model proposed that if 'Integrated Employee Participation' schemes (as are to be found within the mining industry) were to achieve their desired attitudinal and behavioural outcomes, then the employees concerned had to experience a state of 'psychological integrated participation'. Such perceptions might be

aided by aspects of the design and method of implementation of the schemes;

- mine management's commitment to 'Integrated Employee Participation' programmes may have substantially moderated the effects thereof;
- aspects of the managerial system of communication and control may have substantially moderated the effects of 'Integrated Employee Participation' programmes;
- there were a number of personality and biographical attributes that may have played a moderating role in the effects of participation on individual employees' work-related attitudes and performance. These included the employees' tenure, age, and levels in the hierarchy, as well as their tendencies towards authoritarianism, needs for independence and work loci of control; and
- in the light of the above, a 'contingency approach' to the design and implementation of 'Integrated Employee Participation' schemes might have been appropriate, with different permutations of the form and extent of financial and decisional participation introduced at different levels in each mine organisation.

The 'Integrated Employee Participation' model described in this chapter integrated prior research on the effects of financial- and decision-making participation. A detailed network of relationships between employee perceptions, attributes, attitudes and behaviours was constructed, which articulated one set of conditions through which the 'Integrated Employee Participation' schemes could lead to desired psychological and behavioural effects. The model was of particular relevance to the South African mining industry, where 'Integrated Employee Participation' schemes have been introduced, but where very little, if any, empirical research had been undertaken into their processes and outcomes.

As this research study was undertaken on a single organisation, it was not possible to test all the relationships proposed within this model (e.g. the effects of participation schemes could not be compared across forms or

differing objectives). Nevertheless, the study aimed to test major pillars of the model.

Chapter 9 will detail the research problem and hypotheses that arose from the consideration of this 'Model of Integrated Employee Participation (incorporating moderating effects)'.

THEME 2: METHODOLOGICAL

The essential aims of this theme are to present the research problem, subproblems and hypotheses of the study (this will be done in chapter 9), and to present a detailed review of the research design and research methods used (this will be done in chapter 10).

Chapter 10 will include a brief discussion of the methodological and epistemological foundations of the study, and a detailed description of the measuring instruments and statistical methods employed in the research. The main assumptions and limitations of the study will also be stated.

CHAPTER 9

THE RESEARCH PROBLEM AND HYPOTHESES

9.1 INTRODUCTION

The preceding chapters reviewed the extant literature on employee participation, and culminated in the development of a theoretical model of 'Integrated Employee Participation Schemes (incorporating moderating effects)'. Such a model could be tested within the South African gold-mining industry, as many mines have introduced both decisional and financial involvement programmes. As previously discussed however, there existed minimal empirical research evidence as to the effects of such 'integrated' employee involvement programmes, or the conditions under which they were most effective. There was thus a clear need for a comprehensive research investigation into the dynamics and effects of such 'integrated' participation schemes within the industry.

The objectives of this chapter are to present the research problem, subproblems and hypotheses that formed the framework for the study, and to explain the rationale for each hypothesis in terms of the literature and relevant aspects of the South African gold-mining industry.

9.2 THE RESEARCH PROBLEM

The problem that prompted this research effort was first outlined in chapter 2, where the controversy of whether participative management 'works' was first discussed. In that chapter, three categories of explanatory models of the effects of participative management were also reviewed. These categories were first proposed by Miller and Monge (1986) as a classification system for explaining the processes by which employee involvement affected employee attitudes and work-related behaviour. It was pointed out by Miller and Monge (1986) that these categories were not mutually exclusive, and that actual participative processes may incorporate elements of each. This study therefore proposed to draw on various elements from all three types of explanatory models. It sought

support for hypotheses drawn from a combination of cognitive, affective and contingency models of participation, as well as from the model of 'Integrated Employee Participation (incorporating moderating effects)' developed in chapter 8 of this thesis. A number of the limitations of previous studies were also addressed in the research design of this study.

9.2.1 FORMULATING THE PROBLEM

The previous chapters highlighted that employee participation, whether financial or decision-making in nature, was postulated by the vast majority of commentators to improve employees' attitudes to their work, and to a lesser extent to improve their work performance. The relationship between these variables has been demonstrated to be a complex one, however, with numerous intervening and moderating variables being identified. From a contingency perspective, specific factors may exert varying degrees of moderating influence on the effects of participation. These factors and their relative impacts on the participation process may also vary from industry to industry. It was thus warranted to explore for significant moderators of the effects of 'integrated' programmes of participation within the South African gold-mining industry. A number of such postulated factors were incorporated in the model developed in chapter 8. Arising from these issues, the research problem was formulated and will be stated in section 9.2.2, below.

9.2.2 THE STATEMENT OF THE PROBLEM

This research proposed to investigate the effects of 'Integrated Employee Participation Schemes' on worker attitudes and performance in the South African gold-mining industry, and the dynamics by which such effects were achieved. It also proposed to test for the moderating impact of measures of personality, managerial commitment, and management control systems on the relationships between measures of employee perceptions of the extent of participation, employee attitudes and performance. The research further aimed to investigate whether such moderating

effects were specific to particular levels in the organisation, specific work locations, and varied over time.

9.3 RESEARCH SUBPROBLEMS AND HYPOTHESES

This research study was divided into two parts. The first part can be regarded as explanatory in nature, and involved the formulation of five subproblems and eleven hypotheses, all of which were suggested by the relevant literature and / or the model described in chapter 8 of this thesis. The second part of the study was exploratory in nature, and involved the formulation of a single subproblem. No hypotheses were formulated for the exploratory part of the study, as such research was hypothesis-generating in nature, rather than hypothesis-testing (Emory and Cooper, 1991 p 148). The breaking-down of the main research problem into discrete subproblems, each researchable by the testing of dedicated hypotheses, was proposed by Leedy (1993, p 70). Huysamen (1976, p 164) recommended that research hypotheses should initially be presented in a scientific format, and subsequently converted into testable, statistical hypotheses. It was decided to follow this procedure. The subproblems and their specific scientific hypotheses are thus presented below. The statistical hypotheses derived therefrom will be presented in the following chapter.

9.3.1 SUBPROBLEM 1: ASSOCIATIONS BETWEEN PARTICIPATION, ATTITUDES AND PERFORMANCE

The first subproblem was to determine whether there were significant relationships between the perceived extent of employee participation on South African gold-mines, and employee work attitudes and performance.

9.3.1.1 Hypothesis 1:

There is a positive relationship between employees' **job satisfaction** and their perceived extent of **financial participation.**

9.3.1.2 Hypothesis 2:

There is a positive relationship between employees' **job satisfaction** and their perceived extent of **participation in general work-related decision-making.**

The rationale for hypotheses 1 and 2 was as follows:

- although little research work had been done in this area within the context of the South African gold-mining industry, the perceived extents of both financial and decision-making participation had been found by non-South African researchers (including Hammer et al, 1982; Long, 1978a) to be associated with increased job satisfaction.

9.3.1.3 Hypothesis 3:

There is a positive relationship between employees' **job satisfaction** and their perceived extent of **participation in specific types of work-related decision-making.**

The rationale for hypothesis 3 was as follows:

- chapter 3 of this thesis also identified that worker participation in specific areas of decision-making had been found to be associated with enhanced job attitudes and motivation (Miller and Monge, 1986; Searfoss and Monczka, 1973). Due to the emphasis placed on safety matters in this industry, participation in decision-making relating thereto was included as a pertinent form of involvement. The need for this inclusion was indicated by Leger (1993), who noted that the existing mine safety management system ('M.S.M.S.') of the Chamber of Mines was characterised by an absence of provisions for worker participation.

9.3.1.4 Hypothesis 4:

There is a positive relationship between employees' **job satisfaction** and their **performance.**

The rationale for hypothesis 4 was as follows:

- Nuti (1987) emphasised that the viability of worker participation, from a managerial perspective, depended to

a large extent on its purported productivity-enhancing effect. It was thus deemed essential for this study to investigate the behavioural effects of participation, in addition to the attitudinal outcomes addressed in hypothesis 1. In proposing an indirect relationship between employees' perceived extent of participation and their performance (i.e. with job satisfaction acting as an intervening variable), hypotheses 1, 2, 3 and 4 were consistent with affective models of the effects of participation (as defined by Miller and Monge, 1986).

9.3.1.5 Hypothesis 5:
There is a positive relationship between employees' **job satisfaction** and their **stability**.

The rationale for hypothesis 5 was as follows:

- the hypothesised behavioural effects of employee participation include stability and commitment to the organisation as reflected in measures such as levels of absenteeism and turnover (Rhodes and Steers, 1990).

9.3.2 SUBPROBLEM 2: MODERATING EFFECTS
The second subproblem was to analyze and to interpret the treated data to test for the moderating impact of specific factors on significant relationships between employees' perceived extent of participation, job satisfaction and performance. Hypotheses 6, 7, 8, 9 and 10 referred to these moderating effects, and were consistent with contingency models of the effects of participation (as defined by Miller and Monge, 1986).

9.3.2.1 Hypothesis 6:
Personality factors moderate relationships between employees' perceived extent of participation, job satisfaction and performance.

The rationale for hypothesis 6 was as follows:

- Cotton et al (1988) recommended the examination of contingency variables as moderators of the effects of

employee participation. It was therefore appropriate to test for the moderating effects of selected personality factors. Precedents for an investigation of moderating influences of this nature have been set by researchers such as Abdel-Halim (1983), Tosi (1970), and Vroom (1959). The specific personality constructs selected as hypothesised moderators were suggested by the prior empirical research literature, as reviewed in chapter 7.

9.3.2.2 Hypothesis 7:

Employees' perceptions of aspects of the system of **managerial communication and control** moderate the relationships between their perceived extent of participation, job satisfaction and performance.

The rationale for hypothesis 7 was as follows:

- the relationships between participation and employees' perceptions of aspects of an organisation's management system of communication and control was an area of specific interest in this study. As discussed in chapter 7, prior researchers have investigated both the effects of participative budgeting (Hopwood, 1976), and the impact of various aspects of managerial control systems on participation schemes generally (Locke, 1983; Otley, 1978; Shalley and Oldham, 1985). As noted in section 8.2.5 of chapter 8, such aspects might include employees' perceptions of the extent and nature of work-related feedback received. By testing for the potential moderating effect of such perceived feedback, this hypothesis was consistent with <u>cognitive</u> models of the effects of participation (as defined by Miller and Monge, 1986).

9.3.2.3 Hypothesis 8:

Employees' perceptions of **managerial commitment** to participation moderate the relationships between their perceived extent of participation, job satisfaction and performance.

The rationale for hypothesis 8 was as follows:

- Long (1978a) noted that management's commitment to worker participation played a significant role in enhancing the effects of such programmes. Further, Richardson and Nejad (1986) suggested that the effectiveness of profit-sharing and decision-making participation may have had more to do with managerial commitment and style than with the actual extent of participation provided within the schemes. As discussed in chapter 7, the results of empirical studies undertaken by Klein (1987) and White (1979b) suggested that managerial commitment was indeed a significant potential moderating factor that should be incorporated into a study of this topic.

9.3.3 SUBPROBLEM 3: WORK-LEVEL CONSISTENCY OF MODERATING EFFECTS

The third subproblem was to investigate whether significant identified moderating effects on the relationships between participation, worker attitudes and performance were work level-specific, or varied between different levels in the organisational hierarchy.

9.3.3.1 Hypothesis 9:

Most moderating effects on the relationships between participation, worker attitudes and performance are **work-level specific.**

The rationale for hypothesis 9 was as follows:

- the nature of the working environment is likely to vary considerably between different levels of the organisational hierarchy in the gold-mining industry. Researchers such as French and Rosenstein (1984), Hrebiniak (1974) and Searfoss and Monczka (1973) have all shown that an employee's job level had important effects on work-related attitudes in a participative environment. It was thus deemed appropriate to test this issue within this research study.

9.3.4 SUBPROBLEM 4: WORK-SITE CONSISTENCY OF MODERATING EFFECTS

The fourth subproblem was to investigate whether significant identified moderating effects on the relationships between participation, worker attitudes and performance were situation-specific, or varied between different work-sites on the surveyed mine.

9.3.4.1 Hypothesis 10:

Most moderating effects on the relationships between participation, worker attitudes and performance are **situation specific.**

The rationale for hypothesis 10 was as follows:

- working conditions, and the nature and effects of participation, might have differed considerably at different work-sites within the gold-mining industry. Miners travelling underground, particularly, may have been expected to work in a different safety and operating environment than surface personnel. Accordingly, it was deemed appropriate to test for differences in perceptions about, and the effects of, participation between employees working above and below ground at the subject mine.

9.3.5 SUBPROBLEM 5: LONGITUDINAL CONSISTENCY OF MODERATING EFFECTS

The fifth subproblem was to investigate whether the significant identified moderating effects on the relationships between participation, work attitudes and performance were fixed over an extended period of time.

9.3.5.1 Hypothesis 11:

Most moderating effects on the relationships between participation, worker attitudes and performance are **time-specific.**

The rationale for hypothesis 11 was as follows:

- French and Rosenstein (1984), Kelly and Kelly (1990), and Kren (1992) have all pointed to the major limitation of cross-sectional analysis as being its inability to provide clear-cut evidence to support predictions of directionality of relationships. Further, Miller and Monge (1986) concluded their meta-analysis with a recommendation that future research should include longitudinal studies of the development of participative systems and norms in organisations. This, they suggested, would help to clarify the directional structure of the relationships between participation, satisfaction and productivity. A further issue was highlighted by Ivancevich (1977), who found that there was a noticeable diminishing of the effects of participation over time. By undertaking a longitudinal study of the participation schemes at the subject mine, it was intended to address and clarify these issues with respect to the South African gold-mining industry.

9.3.6 SUBPROBLEM 6: LONGITUDINAL SUPPORT FOR A PATH MODEL

The sixth subproblem was to seek support for hypothesised relationships contained within a further path model of 'Integrated Employee Participation'. Such a model would propose direct, rather than moderating effects by the individual (biographical and personality) and organisational (employee perceptions of managerial commitment, and of the system of communication and control) variables of the study. Within the exploratory section of this study, it was decided to seek support for a number of postulated directional relationships, contained within such a path model of the effects of 'integrated' participation. This exploratory analysis was justified because of the perceived need for a thorough understanding of the dynamics of such 'integrated' participation programs in the South African gold-mining industry.

9.4 CONCLUSION

This chapter has presented the research problem, sub-problems and scientific hypotheses which guided this research effort and provided a framework for the empirical study. The rationale for each scientific hypothesis was also described. Emory and Cooper (1991, p 61) suggested that 'good' hypotheses were categorised by being adequate for their purpose, testable, and better than any rival hypotheses in terms of their range, likelihood of support, and a requirement of few conditions or assumptions. It is felt that these scientific hypotheses meet Emory and Cooper's (1991) recommended criteria.

The following chapter will present details of the research strategy, design and methodology used in this study.

CHAPTER 10

THE RESEARCH DESIGN AND METHODOLOGY

10.1 INTRODUCTION

The main objective of this chapter is to present a detailed review of the research design and the research methods used in this study. In achieving this primary objective, the following sub-objectives will be addressed in sequence:

- the methodological and epistemological foundations of the study will be discussed;
- the statistical hypotheses will be deduced from the scientific hypotheses previously derived in chapter 9;
- the attributes of the research project will be identified;
- the research design will be described and justified in terms of the identified attributes;
- the measuring instruments used in the study, including the manner in which they were scored and translated into the vernaculars, will be described;
- the statistical methods used at various stages of the study will be specified; and
- the assumptions and limitations of the study will be stated.

10.2 THE METHODOLOGICAL AND EPISTEMOLOGICAL FOUNDATIONS OF THE STUDY

Scapens (1990) stated that the appropriateness of a research methodology, as opposed to competing methods, depended upon the methodological and epistemological position of the researcher. Further, Otley and Berry (1994) emphasised that observations were not theory-free. Following the thinking of Popper (Magee, 1973), they noted that in the social sciences the theoretical presuppositions of the researcher influenced the observation, the perceived phenomena and the interpretations thereof. It is therefore appropriate to briefly review the epistemological stances which might have been appropriate for this study, and to identify the approach that was actually adopted.

Epistemology was defined by Emory and Cooper (1991, p 37) as:

> '.. the body of knowledge that provides the classifications that discriminate among the styles of thinking.'

Otley and Berry (1994) distinguished between three epistemological stances of positivism, functionalism and insight.

Positivism suggests that research aims primarily to develop explanations of phenomena. Under this approach, researchers continually seek to modify theory in the light of new evidence or the application of theories to new situations. Theories can be abandoned by researchers, should 'superior' theories be proposed.

In the context of organisational research, functionalism aims to explain phenomena in relation to their functions in support of the purposes of an organisation. This approach was criticised by Otley and Berry (1994, p 50) because it tended to produce interpretations of phenomena and control systems, rather than working towards the building or developing of theories.

Insight stances, also referred to as 'Verstehen', include phenomenology, ethnomethodology and interpretative methods. These methods are not utilised for formal theory-testing purposes, but address the pivotal issues of purpose, power and values which are ignored by positivist approaches. Otley and Berry (1994, p 50) stated that insight stances were often adopted by researchers when they were interested in the rationales or theories in use by subjects within a case study situation. They noted that such researchers often relied on a pre-determined theory through which observations were interpreted. It was thus an open question as to the extent to which the theory also provided the basis for the observations in the first place.

As will be detailed later in this chapter, this research study was undertaken within a single organisational setting. Otley and Berry (1994, p 48) argued that a positivist approach could be applied to such a research project. They stated that a study of a particular organisation could be viewed as part of a wider set of similar studies, provided adequate scientific control was demonstrated. This would ensure that subsequent researchers could follow the design in a reliable manner. Otley and Berry (1994) acknowledged however that a problem with this approach was the potential inability to control the boundary of the research study effectively, thus failing to ensure that the values of endogenous variables were held constant. They also noted that the full range of exogenous variables might not be fully observed, and comparative analysis might therefore not be possible. Otley and Berry (1994) further noted that in the field of management accounting research, a number of case studies in the literature could be viewed as quasi-positivist in nature, in that several variables were measured within a single organisational setting. They cast doubt as to the adequacy of control in such studies, especially with respect to changes in the organisations before, during, and after the periods of study. This point was of particular relevance to this study, in assessing the generalisability of its findings. The issue will be addressed further in chapter 15, during the evaluation of the results of the research.

Otley and Berry (1994) thus criticised functionalist and insight approaches, on the basis that they did not primarily aim at the building, developing or testing of theory. However they saw (1994, p 50) no reason to exclude any of the broad stances and indeed recommended plurality of epistemology. They suggested that a 'critical case' could be used to question the empirical support of hypotheses by providing an example of a set of phenomena which were inconsistent therewith. This was in line with Popper's view (Magee, 1973) that it was the rejection of hypotheses that added to knowledge, not the ongoing confirmation of previously-supported hypotheses.

Arising from the above methodological considerations, it was decided that primarily a positivist stance would be appropriate for this study. However, as noted previously, the research contained both explanatory and exploratory components. Therefore, in accordance with the recommendations of Otley and Berry (1994, p 50), functionalist and insight stances were not excluded when considering the research design, or in the subsequent interpretation of the results.

10.3 THE STATISTICAL HYPOTHESES

Following the recommendation of Huysamen (1976, p 164), all the scientific hypotheses presented in chapter 9 were converted into testable, statistical form. This was required to be done prior to determining the research design and the statistical methodology. The statistical hypotheses are therefore presented in this section. Each statistical hypothesis will be expressed initially in alternate form, followed by the null (Ho) form.

As will be detailed in section 10.4.1, this research study was longitudinal in nature, and involved two surveys approximately ten months apart. Thus the hypotheses of association (numbered 1 to 5) were designed to test for consistent associations between variables over time, while the hypotheses of moderating effects (numbered 6 to 8) were designed to test for significant moderating effects by variables at either point in time. Hypotheses 9 and 10 were designed to test whether the measured moderating effects were work-level and work-site specific respectively, while hypothesis 11 was designed to test whether the moderating effects were time-specific.

10.3.1 HYPOTHESIS 1

There is a significant association over time between scores obtained on a measure of employees' job satisfaction and scores obtained on a measure of their perceived extent of financial participation.

The null hypothesis (Ho) states that there is no such association (zero correlation), or that the significance of

the correlation is so small that it can be accounted for by chance.

10.3.2 HYPOTHESIS 2

There is a significant association over time between scores obtained on a measure of employees' job satisfaction and scores obtained on a measure of their perceived extent of participation in general work-related decision-making.

The null hypothesis (Ho) states that there is no such association (zero correlation), or that the significance of the correlation is so small that it can be accounted for by chance.

10.3.3 HYPOTHESIS 3

There are significant associations over time between scores obtained on a measure of employees' job satisfaction and scores obtained on measures of their perceived extent of participation in:

(a) work target setting; and
(b) decision-making relating to safety issues.

The null hypothesis (Ho) states that there are no such associations (zero correlations), or that the significances of the correlations are so small that they can be accounted for by chance.

10.3.4 HYPOTHESIS 4

There is a significant association over time between scores obtained on a measure of employees' job satisfaction and scores obtained on a measure of their performance.

The null hypothesis (Ho) states that there is no such association (zero correlation), or that the significance of the correlation is so small that it can be accounted for by chance.

10.3.5 HYPOTHESIS 5

There is a significant association over time between scores obtained on a measure of employees' job satisfaction and scores obtained on a measure of their stability.

The null hypothesis (Ho) states that there is no such association (zero correlation), or that the significance of the correlation is so small that it can be accounted for by chance.

10.3.6 HYPOTHESIS 6

Scores on measures of employees' work locus of control, need for independence and authoritarianism exert a combined moderating effect on the majority of associations between scores obtained on measures of employees' job satisfaction, perceived financial and decision-making participation, and performance and stability.

The null hypothesis (Ho) states that on the majority of these associations there are no such moderating effects, or that the moderating effects are so small (not significant) that they can be accounted for by chance.

10.3.7 HYPOTHESIS 7

Scores on measures of employees' perceptions of the attainability of their work targets, the fairness of their supervisor's evaluation style, and the overlap of their assigned areas of responsibility and control exert a combined moderating effect on the majority of associations between scores obtained on measures of employees' job satisfaction, perceived financial and decision-making participation, and performance and stability.

The null hypothesis (Ho) states that on the majority of these associations there are no such moderating effects, or that the moderating effects are so small (not significant) that they can be accounted for by chance.

10.3.8 HYPOTHESIS 8

Scores on measures of employees' perceptions of management's commitment to participation exert a combined moderating effect on the majority of associations between scores obtained on measures of employees' job satisfaction, perceived financial and decision-making participation, and performance and stability.

The null hypothesis (Ho) states that on the majority of these associations there are no such moderating effects, or that the moderating effects are so small (not significant) that they can be accounted for by chance.

10.3.9 HYPOTHESIS 9

The majority of measured moderating effects on associations between scores obtained on measures of employees' job satisfaction, perceived financial and decision-making participation, performance and stability are work-level specific.

The null hypothesis (Ho) states that the majority of moderating effects are not work-level specific, or that the differences in the majority of moderating effects between work-levels are so small (not significant) that they can be accounted for by chance.

10.3.10 HYPOTHESIS 10

The majority of measured moderating effects on associations between scores obtained on measures of employees' job satisfaction, perceived financial and decision-making participation, performance and stability are situation specific.

The null hypothesis (Ho) states that the majority of moderating effects are not situation specific, or that the differences in the majority of moderating effects between work situations are so small (not significant) that they can be accounted for by chance.

10.3.11 HYPOTHESIS 11

The majority of measured moderating effects on associations between scores obtained on measures of employees' job satisfaction, perceived financial and decision-making participation, performance and stability are time specific.

The null hypothesis (Ho) states that the majority of moderating effects are not time specific, or that the differences in the majority of moderating effects between times are so small (not significant) that they can be accounted for by chance.

10.4 THE RESEARCH DESIGN

Verhonick and Seaman (1978) defined research design as:

> '.. the plan for the study, providing the overall framework for collecting data' (p 30).

This section reviews the research design of the study. It includes a description of the processes by which the subject organisation, the respondent samples, and the variables of interest were selected.

10.4.1 THE RESEARCH STRATEGY

This study aimed, inter alia:

- to contribute further to existing knowledge regarding the effects of employee participation schemes within the gold-mining industry of South Africa;
- to break new ground by testing for the moderating impact of selected factors on the effects of gold-mine employees' financial and decision-making participation on their attitudes and productivity; and
- to investigate the dynamics and the effects of integrated schemes of employee involvement within the gold-mining industry, by seeking support for a multivariate path model incorporating several independent, dependent and intervening variables.

Due to these differing explanatory and exploratory objectives, it was felt that the research strategy should be of a hybrid

nature. The study needed to combine the rigour of a formal statistical analysis, in respect of the explanatory hypothesis-testing section of the research, with the flexibility of a less rigorous exploratory survey for the balance of the study. In determining the most appropriate design for a study of this nature, consideration was given to a number of key attributes of the research:

- a broad range of variables needed to be measured;
- all variables needed to be clearly defined and reliably measured;
- the conclusions of the study needed to be based on data drawn from a representative sample of employees within the subject organisation; and
- the study needed to be longitudinal, to test hypothesis 11, to explore for the effects of participation over time, and to provide added support for the research findings.

Arising from these required attributes, the research design was selected. Within the classification perspectives suggested by Emory and Cooper (1991, p 139), the resultant design was a formal, causal, longitudinal, ex post facto statistical field survey. To facilitate a detailed clarification of this research design, it will now be explained by reference to each element of that classification:

- the study was primarily formal in nature because the main research problem had been crystallised, even though there was a further exploratory section to the study;
- the purpose of the study was causal, because it was concerned with explanations of relationships among variables;
- it was statistical in that it attempted to adequately identify the characteristics of the entire population of the organisation's employees, by making inferences from a representative sample drawn therefrom;
- it was a field survey because it primarily involved the interrogation of an organisation's employees, by questionnaire, under actual environmental conditions;

- it was longitudinal in nature because the data was collected in two separate phases, which were ten months apart from each other; and
- it was ex post facto in so far as the researcher was unable to manipulate the variables of interest, but was restricted to reporting his observations. Emory and Cooper (1991, p 141) noted that this limitation would make it impossible to test for support for hypotheses of causation, and that the researcher would be restricted to holding variables constant through rigorous sampling procedures and statistical data manipulations.

The study involved the administration of an attitudinal questionnaire to randomly-selected staff at all levels of the organisational hierarchy of a major South African gold-mining company. This method of data-collection in the research raised two major issues of concern. Firstly, the fact that the research was undertaken on a single site potentially exposed it to the criticisms levelled at case-study research (Otley and Berry, 1994), including the lack of generalisability of the findings beyond the particular subject organisation. However, as discussed in section 10.2 above, such studies can, from a positivist perspective, provide a useful research function through their attempts to reject hypotheses, and their resulting contributions to knowledge. Mintzberg (1979b, p 583) supported this view when he posed the question:

'What, for example, is wrong with samples of one ?'

The second major issue related to the nature of the attitudinal data in the research. The study aimed to collect data on the perceptions of management and employees towards various aspects of their employment situation, including the various financial and decision-making participation schemes in effect on the mine. It was therefore necessary to measure the attitudes of the respondents, and it was decided that survey research was an appropriate methodology to achieve this end.

Attitude differentiation as a methodology was considered by

Grove and Savich (1979), who suggested that it was relevant only when used as an aid in the investigation of theoretical and empirical research issues. Attitude differentiation was not to be treated as an end in itself. Grove and Savich (1979) identified four major factors particularly relevant to attitude research. These were the scale and questionnaire design, the sample selection procedure, the analysis of results, and the interpretation thereof. Following this observation, special attention was paid to these factors in this study.

The data of this research were of two kinds: primary data and secondary data. The primary data, defined by Leedy (1993, p 117) as:

> '.. the data that lies closest to the source of the Ultimate Truth underlying the phenomenon',

come from original sources, and are accumulated for the specific assignment (Emory and Cooper, 1991 p 286). In this research, this primary data comprised the responses to the survey questionnaires by the employees of the subject mine. The secondary data, defined as that drawn from studies made by others for different purposes (Emory and Cooper, 1991 p 286), comprised performance reports on individual employees. These had been independently prepared by the employees' immediate superiors, mostly within two weeks prior to the first questionnaire data-collection phase. The collection of this performance data was part of the mine's own system of employee training and evaluation. The methods used to collect and measure this secondary data will be described in section 10.5.6.2 below.

As mentioned above, the study was longitudinal in nature. The rationale for this was threefold:

- there was a need to establish longitudinal support for the hypotheses of interest (Kelly and Kelly, 1990);
- there was a need to investigate whether there were significant changes in the effects of employee participation schemes over time (Griffin, 1988; Marks et al, 1986); and

- there was a need for longitudinal data to test hypothesis 11, which specifically proposed that moderating influences on the effects of employee participation were time-specific.

The fieldwork thus comprised three 'waves' of data-collection, being an initial pilot study followed by two major surveys. These will be discussed in detail in section 10.8 below.

After amending certain of the instrument's items, pursuant to issues identified after the pilot study, both major surveys thereafter utilised the identical questionnaire.

10.4.2 SELECTING THE SUBJECT ORGANISATION

Otley and Berry (1994, p 51) noted that the selection of an individual organisation for purposes of undertaking research may arise through 'accidental access'. This refers to cases where the researcher or his associates have prior personal contacts with senior managers in the organisation. Such pre-existing relationships can aid the process of 'selling' the research proposal to management. This is in contrast to 'cold calling' on selected organisations, which has been reported (Otley and Berry, 1994) as being unsuccessful in cases where the proposed research design was partly exploratory. This resistance has been perceived to be due to the open-ended commitment to broad research objectives that such an approach would demand from such firms (Otley and Berry, 1994 p 51).

This research study developed from 'accidental access' as described above, in that a colleague of the researcher was a personal friend of a senior executive of the subject mining company. Nevertheless, before formally selecting the organisation, its suitability for the purposes of the research needed to be assessed. In making this evaluation, cognisance was taken of the required attributes of the research study, as discussed in section 10.4.1 above. The reasons supporting the selection of this organisation were as follows:

- the company operates a large well-established gold-mine in South Africa, employing approximately 14,000 employees. The mine had been profitable for many years prior to the research period, which was attributed by management to a consistently high grade of mined ore, and 'moderate' extraction costs. The mine did not therefore fall into the category of 'marginal profitability', in which mines' profits or losses are highly volatile in relation to the gold-price, due to their high marginal costs of extraction. These factors were appealing, from a research perspective. The mine was felt to be broadly representative of the gold-mining industry, due to its size and well-established cost and revenue structure. The lack of 'marginality', it was felt, was a further advantage because the likelihood of the longitudinal results being affected by uncontrollable fluctuations in the gold price could be avoided;
- the mine had instituted both financial and decision-making programmes of employee participation. These were essential requirements for the study;
- the organisation's top management expressed great interest in the study and its objectives. Although the schemes of employee involvement on the mine had been operating for a number of years, no empirical evidence existed as to the effects thereof. Management therefore offered substantial assistance in terms of providing both interviewing personnel and numerous interviewees, at considerable cost to the mine. Encouragement was also forthcoming from management for the measurement of as many variables as was practically possible within the study. Agreement was also obtained to conduct the study longitudinally. Thus the scope of the research would not be limited by operational considerations or managerial resistance. Further, due to management's encouragement to select large sample-sizes, the conclusions of the study would, as required, be based on representative data.

The subject mine had established a 'cost-containment' bonus scheme for all employees. This scheme was effectively imposed

by management after limited consultation with the relevant trades union (approximately 25 percent of the workforce was unionised at the time of the research). The scheme was rationalised by management as being the most appropriate financial incentive scheme for employees, because the mine's sales revenue is heavily dependent on the dollar-denominated market price of gold, and is thus not entirely under the influence of management or workers. Thus a productivity-linked financial incentive scheme was deemed more appropriate than full profit-sharing. In the event that the actual average cost of mining a tonne of ore in a given month was less than a pre-determined target (based on costs incurred in previous months), then a portion of the savings were distributed to all mine employees. The amount received by each employee was calculated as a flat percentage of his or her basic monthly wage, which percentage depended on the extent to which the total actual costs fell below the budgeted target. However it could be argued that this scheme contained the 'seeds of its own destruction', because the achievement of a monthly bonus automatically led to a lower, and thus harder, target to beat in subsequent months. Indeed, in the twelve months immediately preceding the research study, this 'cost-containment bonus', as a percentage of basic wages, had fallen from 12% to approximately 3%.

A further quarterly 'metal price bonus' was paid to all employees, when the average (Rand-denominated) gold-price for the preceding quarter had exceeded certain 'trigger prices'. Payments in respect of this bonus were also made on a pro-rata basis, being 1% of an employee's pensionable earnings per R500 that the actual average gold price had exceeded the respective quarterly 'trigger price'.

The subject mine had also introduced various forms of decision-making participation. These varied in form between different levels of the organisational hierarchy, but the following aspects were common to all categories of staff:

- all employees were invited to participate in decision-making relating to their work-targets. At managerial

level, these constituted monetary (budget) targets. At supervisory and worker level, staff might have participated in the process of determining the production (tonnage, etc..) targets for their daily shifts; and

- all employees were subject to a firm regime of safety-consciousness and were involved in matters relating to safety policy in their work areas.

The remaining types of decision-making participation varied from employee to employee, according to the nature of their duties. Forums for exercising such participation included work committees, quality circles, green areas, and managerial / staff meetings.

10.4.3 SELECTING THE RESPONDENT SAMPLES

This section describes the sampling techniques used for selecting the respondents, and the key characteristics of the respondent samples.

To facilitate the comparison of the research results between different levels of the organisation's hierarchy, it was necessary to divide the total population of employees into hierarchical levels. This was done in consultation with the mine's personnel management. The objective of this exercise was to break the overall employee population down into discrete sub-populations that would, as far as could be anticipated, be homogeneous in terms of 'cluster' characteristics of work-type and status in the organisation (Leedy, 1993 p 207). After consultation with management, it was decided to stratify the population into three discrete strata, being 'unskilled and semi-skilled', 'supervisors and artisans', and 'management'. In allocating individual staff members to any one of these categories, reference was made to Paterson's (1972) Decision Band Job Evaluation scheme. The allocations were made as follows:

- 'unskilled' and 'semi-skilled' employees were drawn from Paterson grades 'A', 'B1', and 'B2'. This stratum of the population were referred to as 'Category B employees' for purposes of the research study;

- 'supervisors and artisans' were drawn from Paterson grades 'B3', 'B4', 'B5', 'B6' and all 'C' grades. This stratum of the population were referred to as 'Category A employees' for purposes of the research study; and
- 'management' were drawn from Paterson grades 'D' and 'E'.

Having completed this exercise, the total population of the mine's personnel at the time of the first data-collection survey was stratified as reflected in table 10.1.

Table 10.1

Hierarchical Stratification of the Employee Population

Hierarchy Category	Total Number of Employees
Unskilled & Semi-Skilled	10,138
Supervisors and Artisans	3,626
Management	270
Total Staff Population	14,034

The total size of the staff population, and the relative sizes of the sub-populations, did not alter materially throughout the period of the study. This was attributed by management to the very low rate of employee turnover in the company.

10.4.3.1 The Pilot Study

Subjects for the pilot study were not selected at random. This was because the primary objectives of the pilot study were to reveal errors in the research design, to identify inadequate control over extraneous or environmental conditions, and to refine the questionnaire prior to the main study. Operational details of the pilot study will be reported in section 10.8, below.

10.4.3.2 The First Survey

Subjects for the first major 'wave' of data-collection were selected at random. This was in accordance with the recommendations of Leedy (1993, p 208), who suggested that the

following three processes must occur, in sequence, within the overall sample-selection activity:

- identification of the population, plus an evaluation of its structure and characteristics;
- randomisation of the sample must be outlined, and the sample must be selected in accordance therewith; and
- extraction of the data from the sample must then occur.

These recommended processes were followed. The population was evaluated for its structure and characteristics, in accordance with the stratification results reported in table 10.1.

Because the strata of the population were not equal in size, the technique of Proportional Stratified Sampling was chosen for randomly selecting the sample. This procedure entails the random selection from each stratum of a sample proportionately representative of the size of each stratum within the entire population (Leedy, 1993 p 210). Due to the large variations in the size of the sub-populations however, and particularly because of the small number of 'managerial' employees, it was decided to extend the size of the sample in that category.

The question of the ideal sample sizes for strata of these total sizes was also addressed. While recognition was made of the sample-size formulae (Leedy, 1993 p 205), it was also noted that Leedy (1993, p 205) had recommended consideration of other factors in determining sample sizes. These were the degree of precision required between the sample and general populations (this needed to be high), the variability of the sub-populations (this was perceived to be relatively low), and the method of sampling to be employed (in this case, Proportional Stratified Sampling). It was further noted by Murray (1993) that the statistical significance of results obtained in ex-post research of this nature could only be obtained after the manipulation of the data. Statistical significance, while influenced by the sample size, would also be dependent on factors including the standard error of the mean and the standard deviation of the sample. These items were impossible to ascertain before the study, and therefore

the statistical determination of a minimum sample size would be no guarantee of ultimately obtaining statistically significant results. Conversely, statistically significant results may be obtainable from sample sizes lower than that suggested by the sample-size formulae. It was therefore decided to obtain as large a sample from each stratum as was practically possible. This was however done within the limitations of time and resources available, and particularly the perceived extent of cooperation and facilities provided by the subject organisation for the administration of the questionnaires.

The samples for each category were randomly selected from an up-to-date listing of company personnel, itself stratified according to the required population categories. Computer-generated random numbers, using Quattro-Pro (TM) spreadsheet software, were employed to select the respondents.

The respondent sample for the first data-collection survey was characterised as reflected in table 10.2.

10.4.3.3 The Second Survey

Longitudinal studies can be undertaken on a 'panel', or 'test-retest' basis, where the same respondents are interrogated at repeated intervals (Emory and Cooper, 1991 p 141). Such an approach would not necessitate the random selection of samples for the latter surveys. Alternatively, separate random samples may be drawn for each successive survey. This may be mandated in circumstances where the nature of the population has changed substantially during the intervening period, or when the original samples are not easily accessible on the subsequent occasions. This was the situation in the case of the second data-collection survey of the study. For convenience, it was decided to randomly select brand-new samples for the second 'wave'. Thus the process of random number generation and sample selection, described in section 10.4.3.2, was repeated for the second respondent sample. Due to the confirmatory nature of the second study, the significant results (reported later) from the first survey,

and operational constraints at the mine, the sample sizes in the second survey were somewhat smaller than those in the first 'wave'. The characteristics of the second respondent sample were as reflected in table 10.3

Table 10.2

Characteristics of the First Sample

((*) = years)	Whole Sample	Management	Supervisors & Artisans	Unskilled & Semi-Skilled
Sample size (n)	525	46	58	421
Average age (*)	38.48	44.07	36.78	38.11
Average tenure (*)	11.25	13.54	9.14	11.29
Marital status:				
- Married	470	44	48	378
- Unmarried	55	2	10	43
Language group:				
- English	35	20	12	3
- Afrikaans	71	24	41	6
- Zulu	107	1	0	106
- Xhosa	74	1	0	73
- Sotho	64	0	2	62
- Tswana	50	0	2	48
- Shangaan	124	0	1	123
Work site:				
- Above ground	225	33	39	153
- Below ground	300	13	19	268
Education:				
- Up to standard 1	110	0	1	109
- Standards 2 - 5	175	2	0	173
- Standards 6 - 8	96	4	16	76
- Standards 9 & 10	113	21	31	61
- Post-matric	31	19	10	2
Attended company orientation course	332	22	34	276
- did not attend	193	24	24	145

Table 10.3

Characteristics of the Second Sample

((*) = years)	Whole Sample	Management	Supervisors & Artisans	Unskilled & Semi-Skilled
Sample size (n)	234	44	40	150
Average age (*)	37.71	41.09	34.65	37.53
Average tenure (*)	10.98	10.80	8.28	11.75
Marital status:				
- Married	187	41	29	117
- Unmarried	47	3	11	33
Language group:				
- English	26	18	7	1
- Afrikaans	56	26	29	1
- Zulu	48	0	1	47
- Xhosa	30	0	0	30
- Sotho	26	0	2	24
- Tswana	14	0	1	13
- Shangaan	34	0	0	34
Work site:				
- Above ground	96	33	22	41
- Below ground	138	11	18	109
Education:				
- Up to standard 1	33	0	0	33
- Standards 2 - 5	69	0	0	69
- Standards 6 - 8	43	1	9	33
- Standards 9 & 10	50	13	23	14
- Post-matric	39	30	8	1
Attended company orientation course	106	13	20	73
- did not attend	128	31	20	77

Tables 10.2 and 10.3 reflect a general consistency between the two samples, in terms of their characteristics:

- the average age and tenure of respondents were approximately 38 years and 11 years respectively. Management-level employees tended to be the eldest and longest-tenured, while supervisors and artisans were the youngest and shortest-tenured;
- the number of married respondents far outweighed the number of unmarried personnel in all categories;

- management-level employees were approximately evenly-divided between English- and Afrikaans- language groups. Supervisors and artisans were predominantly Afrikaans-speaking. Virtually the entire unskilled and semi-skilled worker group was divided between the remaining five language groups, with the most 'popular' languages being Zulu and Shangaan;
- most unskilled and semi-skilled workers were employed below ground-level, while management, supervisors and artisans were mainly working above ground; and
- the average level of education achieved was substantially lower at the unskilled and semi-skilled level than at the higher levels of the hierarchy.

The main inconsistency between the two samples was in respect of the proportion of employees who reported having attended the company's 'orientation course'. This had fallen in all categories of staff, between the first and second survey.

10.4.4 SELECTING THE VARIABLES TO BE MEASURED

This section presents details of the variables that were measured within the research study. For convenience, each variable has been allocated an abbreviated code which will be used throughout the thesis. For further ease of reference, an index to these codes is provided in appendix B-1.

In order to test the hypotheses of the study, and to undertake the additional exploratory elements of this research, it was essential to measure employee attitudes, perceptions, attributes, and performance. Variables were therefore designed for measuring:

- employees' perceived extent of participation;
- employees' attitudes towards participation and work;
- aspects of employees' personalities;
- employees' perceptions of the organisation's system of managerial communication and control;
- employees' perceptions of management's commitment to employee participation; and
- employees' performance.

Table 10.4 provides the names and abbreviated codes for the measured variables of the study.

Table 10.4

Variable Codes and Names

Category: Perceived Extent of Participation	
PFNPAR	Perceived Extent of Financial Participation
PPAGWD	Perceived Extent of Participation in General Work-Related Decision-Making
PPGOAL	Perceived Extent of Participation in Work Target Setting
PPSAFE	Perceived Extent of Participation in Safety-Related Decision-Making
Category: Attitudes Towards Participation and Work	
FINSAT	Satisfaction with Financial Participation
GWDSAT	Satisfaction with Participation in Work-Related Decision-Making
JOBSAT	Job Satisfaction
ATTCOM	Organisational Commitment
PRSTAY	Employees' Propensity to Remain (in current employment)
Category: Personality Constructs	
LOCCONT	Work Locus of Control
NEEDIND	Need for Independence
AUTHORM	Authoritarianism
Category: Perceptions of the Organisation's System of Managerial Communication and Control	
PERCATT	Perceived Attainability of Work Targets
PERCDIF	Perceived Difficulty of Work Targets
PERCEVF	Perceived Fairness of Immediate Supervisor's Style of Performance Evaluation
PERCEVA	Perceived Ambiguity of Immediate Supervisor's Style of Performance Evaluation

Table 10.4 (continued)

PEROLAP	Perceived Extent of Overlap of Employee's Assigned Areas of Responsibility and Control
PERFEED	Perceived Extent of Feedback Relating to Employee's Performance
Category: Perceptions of Management's Commitment to Employee Participation	
COMFINP	Perceived Extent of Managerial Commitment to Financial Participation
COMGWDP	Perceived Extent of Managerial Commitment to Participation in General Work-Related Decision-Making
COMGOAL	Perceived Extent of Managerial Commitment to Participation in Work Target Setting
COMSAFE	Perceived Extent of Managerial Commitment to Participation in Safety-Related Decision-Making
Category: Employee Performance	
SELPERF	Employee Self-Rated Performance
SUPPERF	Employee Supervisor-Rated Performance

A detailed description of the manner in which each of these variables was measured will be reported in section 10.5, below.

10.5. THE MEASURING INSTRUMENTS

This section describes the measuring instruments which comprised the questionnaire used in this study. Grove and Savich (1979, p 522) stated that whenever questionnaires are used in research, their precise text, together with their instructions for use, should be published. A failure to do this would, they suggested, deprive the results of the research of virtually their entire value. They further stated that statistical findings arising from questionnaire surveys, for which the user does not have the appropriate text and instructions, should be rejected, no matter how potentially significant the results may be. Accordingly, copies of the

instruments used in the surveys are provided within appendix A of this thesis.

Wherever possible, use was made of established measures that had been previously used in South Africa. This was frequently not possible, however, as in many cases no documented South African measurement of the constructs could be found. In such circumstances, use was made of reported instruments from foreign countries, although such questionnaire items often required substantial adaptation to the particular circumstances of the South African gold-mining industry and the subject organisation. Consideration was also given to the need to administer the identical questionnaire at all levels of the organisation's hierarchy, and for the items to be clearly understood by all staff, irrespective of their home languages or levels of education. Leedy (1993, p 189) recommended simplification of questionnaire items, and therefore in many cases items were re-worded to achieve ease of comprehension, and to ensure that the same construct was being measured across the different strata of the population.

It was recognised that, particularly in circumstances such as this where the questionnaire was substantially original, or amended from other measuring instruments, issues of validity and reliability were of concern. Indeed, Emory and Cooper (1991, p 375) stated that borrowing questionnaire items from existing sources and different contexts was risky. This, they suggested, was because it was difficult to make generalised statements of reliability and validity from the resultant data. The procedures adopted to assess validity and reliability of the measuring instruments will be reported in section 10.9.1, below.

Except where specified, the entire questionnaire was devised utilising a five-point Likert (1932) response-type scale. The five response categories were: strongly disagree, disagree, neither agree nor disagree, agree, and strongly agree. A number of items were reverse-scored, to minimise the

possibility of response-set. Reverse-scored items are noted as such in the reproduced questionnaire, in appendix A.

The questionnaire commenced with an introductory preamble, instructions for completion, and eight questions relating to respondents' biographical information. These sections are reproduced in appendix A-1. Thereafter, the questionnaire was divided into sections, each relating to a different variable and containing an explanatory preamble. Appendices A-2 to A-25 contain the individual instrument items and the preambles, in the sequence of the original questionnaire. To protect the identity of the subject mine, company-specific references have been removed from the reproduced document.

In addition to the closed-ended questionnaire items measuring the variables of interest, respondents' opinions about the participation schemes in operation at the mine were invited. This was done by means of open-ended questions, which were placed at the end of the questionnaire. These are reproduced in appendix A-25.

10.5.1 INSTRUMENTS TO MEASURE EMPLOYEES' PERCEIVED EXTENT OF PARTICIPATION

10.5.1.1 The Perceived Extent of Financial Participation Instrument

Perceived Extent of Financial Participation was defined, for the purposes of this study, as an employee's perception of the degree to which, by virtue of his work-efforts, he shared in the financial fortunes of his employer. This was reasoned to equate closely to the combined expectancy and valence concepts proposed by Vroom (1964), in his expectancy theory of motivation. As defined, the construct therefore incorporated the measurement of both a valued (financial) reward, and the measurement of the employee's expectation that an increased effort on his or her part would lead to that reward increasing in magnitude (extent).

A six-item scale was devised to measure employees' Perceived Extent of Financial Participation ('PFNPAR'). Four items were

selected from a larger (39 - item) expectancy questionnaire developed by Reinharth and Wahba (1975), and the remaining two were created by the researcher. The items are reproduced in appendix A-2. They included:

- 'The harder I work, the more I will earn';
- 'There are no rewards for working hard in this company' (reverse-scored);
- 'Improving my performance will lead to my making more money'; and
- 'The bonus paid by this mine is large enough to make me work harder.'

Reinharth and Wahba (1975) originally used their instrument to measure the expectancy of an employee that his effort would lead to desired outcomes. They reported a Cronbach (1951) alpha reliability coefficient of 0.64 for their larger scale. The preamble to these items emphasised that they were to be responded to in the context of the cost-containment bonus scheme operated by the mine.

10.5.1.2 The Perceived Extent of Participation in General Work-Related Decision-Making Instrument

The definition of Perceived Extent of Participation in General Work-Related Decision-Making ('PPAGWD') was taken, in line with Morris et al's interpretation, as being an employee's 'perceived level of general job-related discretion' (1979, p 62). This construct was measured with four items adapted from Siegel and Ruh (1973), which are reproduced in appendix A-6. The original scale has been extensively utilised in foreign research studies, with relatively high internal reliability being reported. Ruh et al (1975) used this scale to measure 'participation in decision-making', and achieved an alpha reliability coefficient of 0.81. Schuler (1977) reported an internal reliability coefficient of 0.85 from these items.

The scale contains general statements concerning participation in work-related decision-making, such as:

- 'I have a lot of say on how I perform my job'; and

- 'I have a lot of say about decisions which affect my job.'

It was decided to use such general questions in preference to a more specific 'decisional-deprivation' measurement approach as used by Hrebiniak (1974), and Long (1979). Such an approach would have asked respondents to select, from a pre-determined list, specific areas in which they desired to participate, and those in which they were currently involved. The difference between these two measures would constitute the deprivation measure. This method was rejected due to the need to administer the same questionnaire at all levels of the hierarchy, and the difficulty in constructing a list of participatory tasks that would apply to all personnel (Hrebiniak's (1974) study was in respect of only one worker-category, medical assistants). The deprivation-measure was also rejected due to the desire to keep the instrument in a 'Likert - type' format.

10.5.1.3 The Perceived Extent of Participation in Work Target Setting Instrument

The Perceived Extent of Participation in Work Target Setting was defined, for purposes of this study, as the perceived degree of involvement by an employee in the setting of his departmental work targets. This included participation by employees in the setting of output quotas at production level. Hopwood (1976) and Emmanuel et al (1991) stated that participation in the work target setting process ('PPGOAL') was measurable for employees at all levels of the hierarchy, whether or not such targets were expressed in financial terms. Departmental budgets or work-goals may be expressed in monetary or non-monetary terms, depending on the nature of the goals and the level in the organisational hierarchy of the employees concerned. Thus mining workers, for instance, may be expected to work towards goals expressed in number of tonnes of mined ore per shift. At senior managerial level, however, targets are more likely to be expressed in Rands and cents.

In order to ensure reliable measurement, the preamble to this

section of the questionnaire emphasised that the items related to participation in the setting of departmental work-targets: monetary (budget) or non-monetary (production) targets, as the case may be. After the preamble, the term 'work-target' was used within all the items, to emphasise the decision-subject of interest.

The scale was thus required to measure an original construct, across the entire organisational hierarchy. No suitable established scale measuring a similar variable could be found, and eventually nine items were adapted from three separate sources. The scale is reproduced in appendix A-4. Items 1 and 2 were selected from Steers' (1976) four-item instrument which measured 'Participation in Goal-Setting'. Cronbach's (1951) coefficient alpha for this instrument's reliability was reported by Steers (1976) as 0.72.

Three items (numbers 3, 7 & 8) were adapted from a 97-item Budget Pressure Questionnaire of Decoster and Fertakis (1968). They reported the reliability coefficient of this whole questionnaire, using the Spearman-Brown Prophesy Formula (Guilford, 1965) as being 0.927.

The remaining four items (4, 5, 6 & 9) were adapted from Searfoss and Monczka's (1973) instrument measuring 'perceived participation in the budgeting process' of general manufacturing foremen. Reliability measures were not reported for that instrument.

10.5.1.4 The Perceived Extent of Participation in Safety-Related Decision-Making Instrument

Perceived Extent of Participation in Safety-Related Decision-Making ('PPSAFE') was defined, for purposes of this research, as an employee's perceived degree of involvement in the making of decisions relating to safety on the mine. No appropriate existing instrument was located, and the construct was therefore measured by the adaptation of four items from Searfoss and Monczka's (1973) questionnaire on participation in budget-setting. It was reasoned that the rewording of items

which had been demonstrated to successfully measure one type of specific decision-making participation (work target setting) would be the most appropriate course of action for measuring a further specific type (safety-related decision-making participation). The items are presented in appendix A-5.

10.5.2 INSTRUMENTS TO MEASURE EMPLOYEE ATTITUDES TOWARDS PARTICIPATION AND WORK

10.5.2.1 The Satisfaction With Financial Participation Instrument

Satisfaction with Financial Participation ('FINSAT') was defined as the extent of an employee's direct satisfaction with the organisation's system of financial participation. No appropriate South African scale was found, but a number of foreign researchers have reported on the use of questionnaire items to measure responses to differing types of financial participation.

Accordingly, the five-item scale constructed to measure this variable included four items adapted from such studies. The scale is reproduced in appendix A-3. It contains three items (1, 3 & 4) adapted from Kelly and Kelly's (1990) research into participatory management. No reliability estimates were provided for Kelly and Kelly's (1990) study. Item 2 of the instrument was adapted from Buchko's (1993) eight-item scale measuring 'E.S.O.P. satisfaction', which was reported to have a Cronbach (1951) alpha reliability coefficient of 0.86. Item 5 of the scale ('The bonus paid by the mine is worth working hard for') was devised by the researcher.

10.5.2.2 The Satisfaction With Participation in Work-Related Decision-Making Instrument

Satisfaction with Participation in Work-Related Decision-Making ('GWDSAT') was defined, for purposes of this study, as the extent of an employee's direct satisfaction with his involvement in work-related decision-making. No appropriate South African scale was found. It was therefore decided to construct a new scale, with reference to similar items used by

other researchers. Item 1 was adapted from Breaugh (1981), while item 2 was a reverse-scored item adapted from Mitchell et al (1975). Item 3 was devised by the researcher. Neither Breaugh (1981) nor Mitchell et al (1975) reported reliability estimates for their instruments, but the value of such estimates would have been uncertain, as only one item was adapted from each. The three-item scale is reproduced in appendix A-7.

10.5.2.3 The Job Satisfaction Instrument

Job Satisfaction ('JOBSAT') was defined by Smith et al (1969) as 'the feelings a worker has about his or her job'. This definition was used for the purpose of this research study. Many instruments used to measure this construct were found in the literature. In selecting an appropriate set of items to measure job satisfaction, the following issues were considered:

- Likert-type responses were desired;
- the items needed to be worded in a manner that would be comprehensible to all respondents; and
- due to limitations on the size of the overall questionnaire, the instrument should be limited to no more than a dozen items.

No single extant instrument had all these attributes, and the decision was taken to compose a new instrument, containing adapted items from selected prior research reports.

Job satisfaction was therefore measured utilising an eleven-item scale, which is reproduced in appendix A-9. Four items (1, 2, 4 & 7) were adapted from Hoppock's (1935) Job Satisfaction Measure. Hoppock's (1935) four original job satisfaction questions were not designed to be answered in a Likert-type format, and these items were therefore reworded to facilitate this. The specific adaptations of Hoppocks's (1935) instrument were as follows:

- 'Which one of the following shows how much of the time you feel satisfied with your job ?' (response choices ranged from 'never' to 'all the time') became:

'On most days I feel satisfied with my job.';

- 'Choose the one of the following statements which best tells how well you like your job.' (response choices ranged from 'I hate it' to 'I love it') became: 'I am enthusiastic about my job.';
- 'Which one of the following best tells how you feel about changing your job ?' (response choices ranged from 'I would quit this job at once if I could' to 'I would not exchange my job for any other') became: 'I would like to exchange my job for another one.' (reverse-scored); and
- 'Which one of the following shows how you think you compare with other people ?' (response choices ranged from 'No one dislikes his job more than I dislike mine' to 'No one likes his job better than I like mine') became: 'I like my job better than most people like theirs.'

McNichols et al (1978) reported on the validation of Hoppock's (1935) instrument, arising from its use in four research projects. They evaluated the Hoppock (1935) measure in terms of its:

- distribution. Scores were normally distributed, indicating no evidence of a response-set in favour of either high or low satisfaction;
- construct validity. Various groups scored differently on the measure which, when correctly anticipated, supports construct validity (Cronbach and Meehl, 1955). Further, factor analysis revealed all four questions loading significantly on a single factor (McNichols et al, 1978 p 740), providing further support;
- convergent validity. This was investigated by McNichols et al (1978, p 740) by correlating scores from the Hoppock (1935) measure with measures undertaken simultaneously on the same respondents, using the Job Descriptive Index (J.D.I.) (Smith et al, 1969). A high correlation ($r = 0.73$, $p < .01$) was obtained between Hoppock's (1935) 'job satisfaction' measure and the J.D.I. measure of 'satisfaction with work';

- concurrent validity. McNichols et al (1978, p 741) suggested that the concurrent validity of Hoppock's (1935) measure was high, due to its ability to predict employees' intentions to either remain with, or depart from, their current employment. They supported this with a reported correlation ($r = 0.40$, $p < .01$) between Hoppock's (1935) satisfaction measure, and the expressed career intent of 3,204 United States Air Force personnel; and
- reliability. Cronbach (1951) alpha coefficients were reported for the four studies undertaken by McNichols et al (1978) as ranging from 0.758 to 0.890.

McNichols et al (1978, p 741) commented that Hoppock's (1935) job satisfaction measure thus appeared to perform well, and did so consistently across a range of sample populations, with varying job categories and organisational levels. Its inclusion in the job satisfaction instrument for this study was therefore justified. Due to the adaptations described above however, it was decided to include further items in the scale.

Four items (3, 6, 10 & 11) were adapted from Curry et al (1986). These were general statements of satisfaction, e.g.:

- 'I feel real enjoyment in my job'; and
- 'I like my job better than the average worker does'.

The statements were deemed suitable for inclusion, as they could be incorporated with minimum alterations, and were designed to be answered on a Likert scale. Cronbach (1951) alpha for Curry et al's (1986) original six-item scale was reported as 0.86.

Two items (8 & 9) were drawn from Romzek (1989). These were general job satisfaction items which also permitted a Likert-type response. Romzek (1989) reported a Spearman-Brown split-half reliability coefficient in her study of $R = 0.65$ for these items. Finally, item 5:

'I would like to change my job for another one',

was selected from Glick et al (1986), and was further designed to measure general job satisfaction of the respondents.

10.5.2.4 The Organisational Commitment Instrument

Romzek (1989) defined Organisational Commitment ('ATTCOM') as a sense of loyalty and psychological attachment to the organisation. This definition was used for purposes of this study. The scale for measuring this construct contained eight items, and is reproduced in appendix A-8. The majority of items (numbers 1, 2, 3, 5, 6 & 7) were adapted from Kelly and Kelly's (1990) review of studies into 'Them and Us' perceptions in organisations that had introduced participation programmes. They reported on responses to specific questionnaire items in seventeen previous case studies. Reliability estimates were not provided by Kelly and Kelly (1990) for these items. One item, number 4, was adapted from the eleven-item organisational involvement scale of Romzek (1989). The final item, number 8, was selected from the nine-item organisational commitment scale of Wall et al (1986). Both Romzek (1989) and Wall et al (1986) reported Cronbach (1951) reliability coefficient alphas of 0.77 for their respective scales.

10.5.2.5 The Propensity to Remain Instrument

Buchko (1993, p 637) stated that employee turnover was a behaviour of considerable interest to employers. He further noted that theory-building and research (e.g. Steers and Mowday, 1981), had suggested a relationship between employees' intentions to leave the firm, and their actual turnover behaviour. This point was of particular relevance to this study, because the actual rate of employee turnover in the subject organisation was very low. Attempts to link the attitudinal measures with subsequent resignations would also have been frustrated by the fact that the respondents were not identified in the questionnaires. Thus the measure 'Propensity to Remain (in current employment)' ('PRSTAY') was used as an (inverse) surrogate for actual employee turnover, a practice well-established by other researchers (e.g. Lee and Mowday, 1987; Price and Mueller, 1981). The construct was defined, for

the purposes of this research, as an employee's desire to remain in his current employment position.

The scale comprised five items, and is reproduced in appendix A-10. Item 1 was extracted, without change, from Hines (1974), who studied the effects of decisional participation in New Zealand. No reliability measure was reported by Hines (1974) for his single-item measure. Items 2 and 3 were extracted, without alterations, from the two-item 'employment mobility' measure of Magenau et al (1988), who reported reliability coefficient alphas ranging from 0.63 to 0.65 over four studies.

The two-item 'Intention to Leave' instrument designed by Lee and Mowday (1987) was adapted, with minimal alterations, to become items 4 and 5 of this scale. Lee and Mowday (1987) reported a reliability coefficient alpha of 0.59 for their instrument.

Item 5 also followed a lead set by O'Reilly et al (1980). In their study of job characteristics and satisfaction among 98 nurses, they invited respondents to indicate, on a Likert-type scale, the probability of their being in the same employment at a fixed date in the future. For purposes of this study, this item was amended to:

> 'It is highly likely that I will be working for this mine in 5 years' time'.

10.5.3 INSTRUMENTS TO MEASURE ASPECTS OF EMPLOYEES' PERSONALITIES

10.5.3.1 The Work Locus of Control Instrument

Work Locus of Control was defined, within this research, as the extent to which an employee believed that events at work were the result of his own actions, or were within his control. A scale was required to measure this construct ('LOCCONT') that would score highly for internal-locus respondents, and lower for external-locus employees.

The instrument for this variable was adapted from Charoux's (1984) study of black leadership potential in South Africa. The scale comprised five items, and is reproduced in appendix A-11. Charoux's (1984) scale had been substantially derived from Munro's (1973) locus of control measure. Charoux (1984) felt, however, that Munro's (1973) scale should be amended to reflect a greater 'industrial' environment for the respondents. This was an appealing aspect for this study, because the researcher desired to measure work locus of control, as opposed to a more general construct. This restriction of the locus of control construct to work-related issues was proposed by Spector (1988), and also applied in South Africa by Nunns and Argirys (1992) in their study of job involvement within the banking industry.

Charoux's (1984) scale was therefore selected as the foundation for constructing this measure. It was also chosen because it had been previously tested in South Africa, on predominantly black industrial employees - a similar sample, demographically, to a large proportion of the population in this study. Charoux's (1984) scale required alteration to enable responses to be made in Likert-type format, and the number of items was reduced (from fifteen to five) due to the need to limit the size of the entire questionnaire. The omitted items were those that the researcher felt related least to the broad range of respondents in the study. Charoux's (1984) scale had demonstrated only moderate reliability (Cronbach alpha = 0.57 to 0.71), which he attributed to a small (n = 103) sample size, and the relatively few number of items in his instrument.

10.5.3.2 The Need for Independence Instrument

The definition of Need for Independence ('NEEDIND') used within this study was that proposed by Vroom (1960, p 16):

> '.. a predisposition to strive for self-reliance, to do things without help'.

The nine-item scale for this construct was drawn directly from Searfoss and Monczka's (1973) twelve-item instrument designed

to measure need for independence. As reported by Searfoss and Monczka (1973, p 546), that instrument had been adapted from items within an instrument employed by Vroom (1960), which had in turn been derived from Tannenbaum and Allport (1956). Vroom (1960) reported a test-retest reliability of 0.61 for his scale.

The scale for this item is reproduced in appendix A-12. Wordings of Searfoss and Monczka's (1973) items were amended to facilitate Likert-type responses from a single range of options, and three items were eliminated due to their perceived inappropriateness to South African societal attitudes. Other wordings were slightly altered to ease comprehension by respondents. For example:

> 'To what extent would you prefer that the person who is in charge of a group you are in tells you what to do ?'
> was amended to:
> 'I prefer my supervisor to tell me what to do'.

10.5.3.3 The Authoritarianism Instrument

Authoritarianism ('AUTHORM') was defined as an employee's inclination to control his environment. The scale for Authoritarianism is reproduced in appendix A-13, and comprised eight items drawn, without alteration, from Searfoss and Monczka's (1973) measure of authoritarianism. Two items were eliminated from Searfoss and Monczka's (1973) original scale, due to their perceived inappropriateness in the current South African socio-political climate, e.g.:

> 'Human nature being what it is, there will always be war and conflict'.

Searfoss and Monczka (1973) did not report the reliability of their scale.

10.5.4 INSTRUMENTS TO MEASURE EMPLOYEE PERCEPTIONS OF THE ORGANISATION'S SYSTEM OF MANAGERIAL COMMUNICATION AND CONTROL

Work targets may range from extremely loose and easily attainable to extremely tight and unattainable (Kenis, 1979).

Commentators (e.g. Drury, 1992) have suggested that ideally, such targets should be tight but attainable. Within an assessment of employees' perceptions of the managerial system of communication and control, it was therefore decided to measure two separate constructs in respect of their work targets: their perceived attainability and their perceived difficulty.

10.5.4.1 The Perceived Attainability of Work Targets Instrument

Perceived Attainability of Work Targets was defined within this study as the perceived likelihood that, without an 'abnormal' amount of effort, an employee would succeed in achieving his work or budget targets. A four-item scale was constructed to measure Perceived Attainability of Work Targets ('PERCATT'), which is reproduced in appendix A-14. Items 1 & 2 were drawn from Steers' (1976) Task-Goal Attribute Questionnaire, which was reported to achieve a Cronbach (1951) alpha reliability coefficient of 0.72. Item 4 was adapted from Shalley et al's (1987) study on Goal Difficulty, for which a Cronbach (1951) Alpha of 0.70 was reported. Item 3 was devised by the researcher. Wordings of all the items were adapted to meet the requirements of Likert-type scale responses, and to achieve simplicity of expression.

10.5.4.2 The Perceived Difficulty of Work Targets Instrument

Perceived Difficulty of Work Targets was defined as the perceived amount of effort required to achieve an employee's work targets. The construct ('PERCDIF') was measured with four items, all drawn from Steers (1976). As was the case with the 'Perceived Attainability' measure, these items were also adapted and simplified to meet the requirements of the questionnaire. The scale is reproduced in appendix A-15.

10.5.4.3 The Perceived Fairness of Immediate Supervisor's Style of Performance Evaluation Instrument

Perceived Fairness of Immediate Supervisor's Style of Performance Evaluation ('PERCEVF') was defined as the perception by an employee of the extent of evenhandedness in

his supervisor's style and method of performance-assessment, and feedback thereof. No appropriate existing instrument was found, and therefore the researcher constructed a new scale comprising three items. The scale is reproduced in appendix A-16. Item 1 was adapted from Breaugh (1981), and was a general statement of satisfaction with supervisory style. Items 2 and 3 were devised by the researcher, and required assessments of respondents' supervisors' comments in terms of fairness (item 2) and accuracy (item 3, reverse-scored).

10.5.4.4 The Perceived Ambiguity of Immediate Supervisor's Style of Performance Evaluation Instrument

Perceived Ambiguity of Immediate Supervisor's Style of Performance Evaluation was defined as the perception by an employee of the degree of lack of clarity of his supervisor's style of performance-assessment, and feedback thereof. The instrument to measure this construct ('PERCEVA') comprised four items, and is reproduced in appendix A-17. Items 1, 2 and 3 were adapted from Kenis' (1979) measure of budget-goal clarity, with all references to 'budget-goals' therein being replaced by 'supervisor's evaluation style'. The validity of his instrument was assessed by Kenis (1979, p 719) using factor analysis, and he reported that the three items measuring 'budget goal clarity' had loaded significantly onto a common factor.

Item 4 was devised by the researcher and stated:

> 'I understand my supervisor's feelings about my performance' (reverse-scored).

10.5.4.5 The Perceived Extent of Overlap of Employees' Assigned Areas of Responsibility and Control Instrument

Perceived Extent of Overlap of Employees' Assigned Areas of Responsibility and Control ('PEROLAP') was defined, for purposes of this study, as the extent to which an employee felt that he had been granted appropriate authority and control to perform his assigned duties and tasks. This construct has seldom been included in empirical studies, and

no suitable existing instrument was found. The scale was therefore constructed by the researcher, and is reproduced in appendix A-18. The instrument comprised five items, of which one, item 4, was adapted from the supervisor's evaluative effort measure of Searfoss and Monczka (1973). All items in the scale asked respondents to rate, on a Likert-type scale, their agreement with statements about the coincidence of their areas of responsibility and control. Two items (4 & 5) were reverse-scored to reduce the possibility of response-set.

10.5.4.6 The Perceived Extent of Feedback Relating to Employees' Performance Instrument

Perceived Extent of Feedback Relating to an Employee's Performance ('PERFEED') was defined as an employee's perception of the amount of information he received about his work performance. A number of instruments were found in the literature to measure this variable. However none of these measures satisfied the requirements of the questionnaire design, in terms of simplicity of expression and the requirement of a Likert-type scale. Accordingly, a scale of five items was created by adapting items from various instruments in the literature. The items are reproduced in appendix A-19. Three items (2, 4 & 5) were adapted from Ashford's (1986) measure of feedback received. She did not, however, report on the reliability of her instrument.

Item 1 was drawn directly from Glick et al's (1986) measure of task feedback, and item 3 was drawn from Kenis' (1979) measure of budgetary feedback. Reliability of this instrument was reported in section 10.5.4.4, above.

10.5.5 INSTRUMENTS TO MEASURE EMPLOYEE PERCEPTIONS OF MANAGEMENT'S COMMITMENT TO EMPLOYEE PARTICIPATION

Employees' perceptions of management's commitment to four different types of employee participation were measured in this study. No suitable extant instruments were located, and therefore the researcher constructed new scales to measure these constructs. Details of the instruments are briefly discussed below.

10.5.5.1 The Perceived Extent of Managerial Commitment to Financial Participation Instrument

Perceived Extent of Managerial Commitment to Financial Participation ('COMFINP') was defined as an employee's perception of the extent to which the management of the organisation had positive attitudes towards the principle of financial participation by employees. This definition falls into the 'psychological' category (Stevens et al, 1978). This is in contrast to an 'exchange' approach to defining commitment (Becker, 1960), which proposes that individuals link their extraneous interests (e.g. financial benefits, such as pension plans) to their work attitudes and performance.

The scale for this variable contained three items, which are reproduced in appendix A-20. The items were devised to measure the extent of the respondent's belief that his superiors were psychologically supportive of the financial participation programme at the mine.

10.5.5.2 The Perceived Extent of Managerial Commitment to Participation in General Work-Related Decision-Making Instrument

Perceived Extent of Managerial Commitment to Participation in General Work-Related Decision-Making ('COMGWDP') was defined as an employee's perception of the extent to which the management of the organisation had positive attitudes towards the principle of general work-related decision-making participation by employees. This also falls into the 'psychological' category of definitions of organisational commitment discussed above (Stevens et al, 1978).

No suitable extant instrument was identified. Due to the general nature of the construct, and the need to measure it for all employees, a new scale comprising four items was constructed by the researcher (see appendix A-23).

Item 2 was derived from Magenau et al's (1988) instrument originally designed to measure Supervisor Support. Item 4 was adapted from Romzek's (1989) measure of Organisational

Involvement. Both of these items were substantially reworded for purposes of clarity and simplicity. Items 1 and 3 were created by the researcher. All four items were designed to be responded to on a Likert-type scale, and one (item 4) was reverse-scored to avoid response-set.

10.5.5.3 The Perceived Extent of Managerial Commitment to Participation in Work Target Setting Instrument

Perceived Extent of Managerial Commitment to Participation in Work Target Setting ('COMGOAL') was defined, for purposes of this research, as an employee's perception of the extent to which his superiors in the organisation had positive attitudes towards the principle of participation by employees in the setting of their work-goals and / or budgets. The scale measuring this construct contained six items, and is reproduced in appendix A-21.

The instrument items were all adapted from Searfoss and Monczka's measures of 'Superior's Effort Regarding Budget Matters' (1973, p 546 & p 547). These comprised two scales, measuring 'goal-directing effort' and 'evaluative effort'. Each questionnaire had been assessed for construct validity using factor analysis, and items from each instrument had loaded significantly onto common factors, in the predicted manner. No formal reliability indicators were reported by Searfoss and Monczka (1973). Items 1, 2 and 3 were adapted from the 'goal-directing' items, and items 4, 5 and 6 were drawn from the 'evaluative effort' items. Rewording of the items was necessary in a number of instances, to aid ease of comprehension and to facilitate Likert-type responses. All references to 'budgets' in Searfoss and Monczka's (1973) items were replaced with the words 'work targets'. Thus:

> 'My supervisor has listened to my problems in budget matters', was adapted to become:
> 'My supervisor does not listen to my problems about my work targets' (reverse-scored).

10.5.5.4 The Perceived Extent of Managerial Commitment to Participation in Safety-Related Decision-Making Instrument

Perceived Extent of Managerial Commitment to Participation in Safety-Related Decision-Making ('COMSAFE') was defined as an employee's perception of the extent to which his superiors in the organisation had positive attitudes towards the principle of participation by employees in decision-making relating to safety matters. The scale measuring this construct contained four items, and is reproduced in appendix A-22.

This construct was designed to measure employees' perceived extent of managerial commitment to a specific type of decision-making participation. As no suitable instrument measuring this specific construct could be located in the literature, it was reasoned that scale items could be adapted from the same source as another similar construct, i.e. perceived managerial commitment to participation in work-target setting ('COMGOAL'). Accordingly, items 1 and 2 were adapted from Searfoss and Monczka's (1973) measure of 'Supervisor's Goal-Directing Effort' regarding budget matters. All references to budgeting were replaced by terms relating to safety matters. The reliability of Searfoss and Monczka's (1973) measures has been previously reported. Items 3 and 4 were created by the researcher and were Likert-type items concerned with general impressions of the priority afforded to safety matters by the organisation. Item 4 was reverse-scored.

10.5.6 INSTRUMENTS TO MEASURE EMPLOYEE PERFORMANCE

A major pillar of this study's research design was the need to investigate the effects of integrated participation schemes on employee performance. Thus measures of performance were required. Three methods of obtaining such measures were identified within the literature:

- objectively-assessed quantitative measures of productivity were used in a limited number of cases (e.g. Ivancevich, 1977; Oldham, 1975). Such measures are usually only available, however, under experimental conditions. Further, quantified production data may not

be available or comparable between job-types in a field setting. This was the case in this study, where quantified productivity data was not measured for individual employees;

- self-rated performance measures were employed in a number of studies (e.g. Abdel-Halim, 1983; Kren, 1992). These have the advantage of being relatively easy to obtain (Heneman, 1974). However researchers (e.g. Reinharth and Wahba, 1975) have criticised self-rating scores on the basis that such measurements are prone to error. Heneman (1974) noted that self-ratings tended to have higher mean values (indicating leniency error), and less variability (indicating a restriction or range error, possibly caused by modesty or timidity on the part of the respondents). Miner (1968) disagreed, however, and suggested that such errors may not occur if the respondents are convinced that their ratings are only to be used within academic research studies. Other researchers have criticised self-ratings of performance on the grounds of halo error (Lawler, 1967), and their lack of convergent and discriminant validity (Campbell and Fiske, 1959);
- many researchers have measured employee performance via supervisor-ratings (e.g. Griffin, 1988; Keller, 1984; Lee and Mowday, 1987). These have the disadvantage of being harder to obtain in a field study, unless such a measure is already available as part of the organisation's system of performance appraisal. Reinharth and Wahba (1975) stated that such measures were superior to self-rated performance indicators, but Heneman (1974) stated that halo error may still occur in the superior-ratings. He undertook a comparative study of self- and superior-ratings of performance amongst 163 M.B.A. graduates of Indiana University, and found that self-ratings were less lenient and more variable than superior-ratings, and that they contained less halo error. Heneman (1974) concluded that his findings supported the use of self-ratings of performance, provided the subjects believed that their responses were only to be used for research purposes.

Various researchers have provided evidence supporting the proposition that subordinates rate their own performance more highly than do their supervisors (e.g. Ilgen et al, 1981; Smircich and Chesser, 1981; Parker et al, 1959). Meyer (1975) suggested that employees rated 'below average' by their superiors were likely to become alienated and demoralised in their work. This, he suggested, was because most employees considered their own performance to be above average. He reported (Meyer, 1975) that 70% to 80% of employees in four samples rated their own performance as 'in the top 25%'. Pearce and Porter (1986) suggested that this phenomenon may even have led average workers to perceive positive feedback on their performance as having been negative.

It was not possible to obtain objective, quantified, performance measures for all employees in this study. The mine maintained productivity data, but this was computed on a team- or shaft-basis, and not in respect of individuals. The company did, however, measure superior-ratings of staff members, within its performance-evaluation and staff-training systems. It was therefore decided to make use of these superior-ratings within the study. It was decided, however, to also measure self-rated performance of employees. This followed the precedent set by others (e.g. Reinharth and Wahba, 1975; Smircich and Chesser, 1981).

10.5.6.1 The Employee Self-Rated Performance Instrument

Employee Self-Rated Performance ('SELPERF') was defined as an employee's assessment of his own work performance. In selecting the dimensions of performance to be measured, cognisance was taken of the procedure recommended by Heneman. He stated (1974, p 639) that dimensions should be selected which were behaviourally meaningful, but which would be general enough to be applicable to jobs across the organisation. Heneman's (1974) study had been in respect of managerial performance only, and it was felt that some of the dimensions used in that study (e.g. planning, coordinating, staffing and negotiating) were not appropriate for all levels of staff in the subject mine. Therefore, after consultation

with the organisation's personnel manager, it was decided to use ten different dimensions to measure self-rated performance for all respondents (see appendix A-24). Most items were designed to be general in nature (e.g. 'Quality of my work'; 'Quantity of my work'; 'Being reliable in my work'), while the 'Commitment to safety' item was designed to be particularly relevant to the industry of study. Respondents were required to indicate their perceived level of performance for each item within a four-item Likert-type scale (Below standard; Acceptable; Good; Exceptional).

10.5.6.2 The Employee Supervisor-Rated Performance Instrument

Employee Supervisor-Rated Performance ('SUPPERF') was defined as an employee's work-performance, as evaluated by his or her immediate superior. As noted in section 10.5.6, the mine operated an internal system of performance evaluation. The 'instruments' used to measure this item were thus the organisation's own performance-evaluation forms. However the following problems were identified regarding the mine's superior-rating system, in terms of its potential to generate useful data for this research:

- the evaluation process had commenced approximately three weeks before the first survey, and not all employees had been rated;
- there were no firm plans to re-rate employees immediately prior to the second survey;
- the rated performance dimensions were not identical across all levels of the organisational hierarchy; and
- the range of scores available from a superior-rating differed between organisational categories.

After considering these issues, the following system was adopted for measuring supervisor-rated performance ('SUPPERF'):

- a single measure was devised for the variable, with four possible values (1 = below standard; 2 = acceptable; 3 = good; 4 = exceptional);
- the organisation's rating scales for each level of the hierarchy were each divided into four equal sub-ranges;

- subjects who scored in the lowest quartile of their respective range scored a '1' on the 'SUPPERF' scale, those who scored in the next quartile scored a '2', and so on; and
- it was decided that the supervisor-assessed performance data would be unreliable for the second wave, as the mine had no plans to update the information in the interim period. The variable would therefore not be incorporated within the second survey.

10.6 THE SCORING TECHNIQUES

With the exception of biographical data, employees' self-rated performance responses, and open-ended opinions invited at the end of the questionnaire, all items therein were measured using a five-point Likert-type format. Respondents were required to choose from one of five categories, ranging from 'strongly disagree' to 'strongly agree'. Coldwell (1979), in his study of role conflict and job satisfaction in black industrial workers, further required respondents to indicate why they had responded in particular ways to each item. This was to force them to consider their responses carefully, and to reduce the possibility of response-set (Coldwell, 1979 p 140). It was decided not to include such additional requests in this study's questionnaire, due its length. To avoid response-set, however, and as indicated in appendix A, a number of items were reverse-scored within the instruments.

Each item was scored in the conventional manner for Likert - type scales, as noted by Emory and Cooper (1991, p 220). A value of '1' was assigned to 'strongly disagree' responses, a '2' to 'disagree', a '3' to 'neither agree nor disagree', a '4' to 'agree' and a '5' to 'strongly agree'. However, if items were designed to be reverse-scored, this was done with a '5' being assigned to 'strongly disagree', a '4' to 'disagree', and so on.

Scores for self-rated performance were allocated in a similar manner, with a '1' being assigned to 'below standard' responses, a '2' to 'acceptable', a '3' to 'good', and a '4'

to 'exceptional'. Total scores were arrived at for each measure by summing all the individual scores for the items in the respective scales.

10.7 TRANSLATION INTO THE VERNACULARS

Questionnaires were administered to respondents, as far as was possible, in their home languages. After consultation with personnel management, and after a scrutiny of a company-wide analysis of languages spoken by the mine's workforce, it was decided to translate the original English questionnaire into six further languages: Afrikaans, Zulu, Xhosa, Tswana, Sotho and Shangaan. Although all black workers on the mine were understood to speak Fanakalo, it was felt that it would not be possible to effectively translate the questionnaire into that language, given its limited range of vocabulary.

The procedure adopted for translation of the questionnaire followed the leads of Alverson (1969) and Coldwell (1979). The steps in the procedure were as follows: separate translators were initially engaged for each language (i.e. six in total). Each of these translators transposed the English questionnaire into their respective languages. The translated copies were then re-transposed back into English by six further translators. The results were compared with the items from the original English document, for reliability and goodness-of-fit. Arising from this comparison, a number of amendments to the original English questionnaire were made. This procedure was designed to ensure that the translated versions would be as unambiguous as possible. The amendments to generate this final version of the English questionnaire were then translated into the other six languages, and incorporated in those translated documents. The final translated versions were compared with the English questionnaire by a further six translators, during the pilot study. Arising from their comments, and the findings of the pilot study described below, a few final refinements were made to selected items in various languages. These alterations further ensured clarity and simplicity of expression, thus maximising the construct validity of the questionnaire.

10.8 THE ADMINISTRATION OF THE QUESTIONNAIRES

Reinharth and Wahba (1975, p 527) recommended that survey questionnaires of the type used in this study should include a covering letter from a senior executive of the organisation. This was done in this case, with a letter from the mine's General Manager being attached to each form, in English, Afrikaans, or Fanakalo. This letter explained the purpose of the study, emphasised the confidential nature of the research, and urged the co-operation of the respondents.

It was intended that the questionnaires should be administered according to common guidelines at all levels of the hierarchy. It was thus decided that literate employees would be required to self-complete the document, while the responses from semi-literate and illiterate employees would be obtained by trained interviewers. All employees at 'supervisor and artisan' or 'managerial' levels had been pre-rated as 'functionally literate' in either English or Afrikaans by the mine's personnel department. It was therefore decided that all respondents from these two levels would self-complete their questionnaires. The extent of literacy among 'unskilled and semi-skilled' staff was however difficult to assess. Although records of individuals' home languages were kept by the mine, it could not be ascertained, prior to an interview, whether or not a respondent could read or write. To avoid bias from a variety of data-collection methods, it was decided that all 'unskilled and semi-skilled' staff would be personally interviewed. Thus each item of the questionnaire was read in turn to these respondents, the meanings thereof clarified if required, and the responses noted.

The organisation provided the interviewers for the research, and these were extensively trained prior to each survey. Bilingual interviewers were selected, who were able to administer the questionnaires in the translated versions, and who also understood the meanings of the original English items. The procedure for training the interviewers included the following:

- the nature and purpose of the study was clearly explained. Emphasis was placed on the intended confidentiality of the results, the anonymity of the respondents, and the potential usefulness of the results. Interviewers were then trained in conveying these messages to the employees, thereby encouraging honest and frank responses;
- every item in the questionnaire was discussed, and the interviewers were required to note the English and translated wordings. Any queries regarding meaning and interpretation were resolved; and
- the method of scoring was explained, and each interviewer was required to complete a 'dummy-run' interview under supervision. The 'dummy' completed questionnaires were then checked, with any errors being pointed out to the interviewer.

10.8.1 THE PILOT SURVEY

Emory and Cooper (1991, p 376) noted that pretesting of a questionnaire was an established practice, both for discovering errors and for the preparation and training of the research team. For those reasons, it was decided to conduct a pilot survey. In conducting the pilot survey, and acting upon the results thereof, the following relevant issues noted by Emory and Cooper (1991, p 378), were considered:

- respondent interest. Initial resistance was identified from respondents who feared that their responses would be known by the mine management. It was decided to reword the covering letter from the mine's General Manager to emphasise that specific responses could not be traced back to individuals. Further training was also provided to interviewers, regarding ways to placate these fears. No subsequent problems were identified concerning respondents' interest and cooperation throughout the completion process;
- meaning and question transformation. A few meanings of questionnaire items were queried, which led to the rewording of the English original, and retranslation of the amendments into the vernaculars;

- continuity and flow of the questionnaire, the sequence of the items, and the instructions contained within the preambles were all successfully pretested.

The pilot study was undertaken on 47 members of staff. While these respondents were not randomly selected, it was ensured that all language-versions of the questionnaire were tested, and that respondents were drawn from all three sub-populations.

Emory and Cooper (1991, p 379) stated that statistical data from a pretest could not provide definitive quantitative conclusions. Nevertheless, they stated that for pilot sample-sizes above n = 25, value could be obtained by statistically analysing the data obtained. This was done, to a limited extent, in this case. Descriptive statistics (including means, variances, standard deviations, and skewness and kurtosis measures) were computed. In addition, Spearman correlations were computed between all variables, and factor analysis undertaken on the instrument items. These statistics are not reported in this thesis but a summary of the findings is as follows:

- the descriptive data revealed a limited extent of skewness and kurtosis, suggesting only a moderate degree of non-normality in the distribution of responses;
- the factor analysis produced a complex rotated solution. However items measuring the same variable were, in most cases, loading significantly onto common factors as expected. This could be interpreted, in broad terms, to mean that the factors produced by the solution were in line with the original constructs of the questionnaire; and
- a number of substantial and significant correlations, as anticipated within the hypotheses of the study, were noted.

The conclusions drawn from the pilot survey were:

- the questionnaire had not displayed serious validity problems;

- the significant correlations obtained from a modest sample-size augured well for the likely significance of results from the larger samples planned for the major surveys; and
- no questionnaire items would be removed for purposes of the major surveys.

The only major issue arising from the pilot survey was the length of the questionnaire, and the time it took to administer it, to unskilled and semi-skilled staff (up to one hour). The researcher was reluctant to reduce the number of items, as this probably would have necessitated the removal of entire variables from the study. After discussion with the mine's management, it was decided to leave the document unchanged. This was justified on the grounds that selected unskilled and semi-skilled respondents were relieved of their duties for a complete shift on the day of the interview. From the mine's perspective, there were therefore no greater costs incurred as a result of the questionnaire length.

10.8.2 THE FIRST DATA-COLLECTION SURVEY

The first data-collection survey was undertaken over a three-week period during August 1993. Respondents were randomly selected in accordance with the procedure outlined in section 10.4.3.2, above.

An operational problem to be resolved was the need to record a measure for a respondent's supervisor-rated performance, while at the same time not identifying him on the questionnaire. This was done by the following method:

- respondents were randomly selected, and listed in company-number sequence. Supervisor-rated performance scores already obtained for these employees were noted, and any outstanding ratings were requested and obtained;
- questionnaire forms were then prepared for the respondents, in their own languages. As their supervisor-rated performance scores were known, the forms were secretly 'coded' with the ratings, by means of full-stops being placed at the end of pre-determined items. However,

at all times, only the researcher was aware of this coding system and its meaning;

- the coded questionnaire forms were then placed in individual sealed envelopes with the respondents' names, identity numbers and work-stations clearly marked on the faces thereof;
- interviewers were instructed to ensure that only the identified individuals were to complete the forms within the envelopes, and that the respondents were not to identify themselves anywhere on the questionnaires;
- upon completion of the forms, they were placed together in sealed 'ballot-type' boxes. These were returned, unopened, to the researcher; and
- spot checks were made during the actual survey to ensure that the above instructions were complied with.

This method ensured that completed questionnaires, while not identifying the respondents, would contain their supervisor-rated performance-scores. This therefore achieved the required 'linkage' of employees' supervisor-rated performance with their other responses. There was also no breach in research ethics committed, in terms of misrepresentations to employees concerning the anonymity of their responses.

A further concern was the potential for non-response bias among 'managerial' and 'supervisor and artisan' staff, as these individuals were sent the questionnaires for self-completion. To ensure a high response rate, therefore, a manager from each section, shaft, or department of the mine was appointed to oversee the collection of the completed questionnaires. While it was impossible to identify non-respondents from the 'managerial' or 'supervisor and artisan' sub-populations, follow-up enquiries as to whether or not questionnaires had been completed did lead to a high response rate among these staff.

'Unskilled and semi-skilled' respondents were individually 'paraded' for interviewing. Relatively few were unavailable, for reasons of sickness, annual leave, or 'unavoidable' work

commitments. The total number of questionnaires distributed and completed were as reflected in table 10.5.

Table 10.5

Response Rate: First Data-Wave

	Total	Management	Supervisors & Artisans	Unskilled & Semi-Skilled
Questionnaires:				
- Distributed	584	49	65	470
- Returned	535	46	59	430
- Usable	525	46	58	421
Response rate (% of Distributed)	91.6%	93.9%	90.8%	91.5%
Usable rate (% of Distributed)	89.9%	93.9%	89.2%	89.6%

Thus a generally high rate of questionnaire response and usability was achieved.

10.8.3 THE SECOND DATA-COLLECTION SURVEY

The second data-collection survey was undertaken ten months after the first survey, in June 1994. In addition to some of the original interviewers, new personnel were provided for this purpose by the mine. This necessitated substantial retraining, prior to administration of the second survey.

The procedures adopted for administering the first survey, described in section 10.8.2 above, were repeated for the second survey. A new random sample was drawn from an updated list of company personnel. It was not possible, however, to obtain reliable estimates of supervisor-rated performance scores for the respondents, as these had not been fully updated by the mine since the first survey.

The response and usability rates of questionnaires from the second wave were as shown in table 10.6.

Table 10.6

Response Rate: Second Data-Wave

	Total	Management	Supervisors & Artisans	Unskilled & Semi-Skilled
Questionnaires:				
- Distributed	275	50	50	175
- Returned	242	46	43	153
- Usable	234	44	40	150
Response rate (% of Distributed)	88.0%	92.0%	86.0%	87.4%
Usable rate (% of Distributed)	85.1%	88.0%	80.0%	85.7%

Although the response and usability rates for the second survey were moderately lower than those obtained in the first survey, it was felt that these were generally good.

10.9 THE STATISTICAL METHODOLOGY

This section describes the statistical methodology used to analyse the data generated in the two major surveys of the study. In selecting the most appropriate statistical techniques, the following issues were considered:

- the research strategy needed to be rigorous in respect of the relationships that had been hypothesised to exist between the variables of interest;
- however it also needed to be flexible, in respect of the exploratory nature of the remaining sections of the study.

In order to rigorously test the hypotheses of association and moderating effects, extensive use of correlational analysis and moderated multiple regression was made. In order to accommodate the exploratory nature of the remaining parts of the study, path analytical techniques and multiple regression were employed. These techniques will be described in detail in the following sections.

10.9.1 THE RELIABILITY AND VALIDITY OF THE MEASURING INSTRUMENTS

A number of techniques were used to assess the reliability and validity of the questionnaire. Reliability was tested using Cronbach's (1951) coefficient alpha, as a test for internal consistency. This measure was defined within the S.A.S. Procedures Guide (1990, p 213) as:

> '.. the squared correlation between the observed value Y and the true value T ... that is ... the proportion of the observed variance that is due to true differences among individuals in the sample.'

Factor analysis was also used to assess the validity of the measuring instruments. Kim (S.P.S.S. manual, 1975) pointed to the most distinctive characteristic of factor analysis as being its data-reduction capability. From a correlation matrix for a set of variables, factor analysis permits an assessment of whether some underlying pattern of relationships exists. In such an event, it is possible to 'reduce' the data to a smaller set of 'factors', responsible for the observed correlations in the data. Potential uses for such techniques are numerous, but Kim (S.P.S.S. manual, 1975 p 469) identified three main categories of applications:

- exploratory uses to detect patterns within the variables, to seek new concepts and possibly a reduction of the data;
- confirmatory uses to test hypotheses about the structuring of variables, the identification of significant factors and factor loadings; and
- measurement uses such as the construction of new variables for use in later studies.

Within this categorisation, factor analysis was used in this study for confirmatory purposes. The objective of the procedure was to establish the criterion-related validity of the measuring instruments.

Nie et al (1975) stated that there were three steps in a factor analysis procedure:

- firstly, a correlation matrix for the variables concerned must be prepared;
- secondly, initial factors must be extracted, which constitute a preliminary exploration of possible data reduction; and
- thirdly, a rotation of the initial factors is performed to obtain an optimal solution. This is done to seek a set of more simple and interpretable factors.

Grove and Savich (1979) recommended the use of factor analysis as an appropriate technique to assess the criterion validity of measuring instruments in attitudinal research. They further proposed a methodological model for conducting reliability and validity tests on attitudinal data which, they suggested (Grove and Savich, 1979 p 531) could lead to the acceptance of attitude-measurement scales. Grove and Savich's (1979) model was a response to criticisms of attitudinal research in accounting by researchers (e.g. Shaw and Wright, 1967). Such critics had suggested that little value had arisen from such attitudinal studies, because of the lack of detail provided by the researchers about reliability and validity measures of their data.

Grove and Savich's (1979) model of attitudinal research in accounting provided reliability and validity tests which, they suggested, would permit a broad range of parametric, as well as non-parametric tests to be undertaken on the data. Before constructing this model, it was therefore necessary for Grove and Savich (1979, p 531) to consider the 'levels of measurement' issue, which was also relevant to this study. A brief review of this debate will be provided in the next section, together with a description of the procedure recommended by Grove and Savich (1979) to address the issue.

10.9.2 THE LEVELS OF MEASUREMENT ISSUE

It is incumbent on any researcher to decide which statistical tests to employ in the testing of formulated hypotheses. However the issue of whether to utilise parametric or non-parametric statistical techniques must first be addressed.

Macintosh (1984, p 106) stated that the selection of the statistical tests to be used depended on the assumptions made about the nature of the distribution of the population, and also upon the measurement scale used. The consideration of whether or not to use parametric statistical procedures on ordinal-type data is referred to as the 'levels of measurement' issue.

It has been argued (e.g. by Emory and Cooper, 1991 p 530) that non-parametric tests must be chosen whenever scores are based on measurement that is not on at least an interval scale. This argument is based on the assertion that the structure of a set of scores, and the structure of the arithmetic employed in calculating statistics therefrom, should correspond. Data obtained from Likert-type attitudinal scales is ordinal (non-additive) in nature. This precludes, in the opinion of many researchers, the use of parametric techniques, because the only measures of central tendency available for ordinal data are the mode and the median. Thus, for example, a t-test for significant differences in means of ordinal data is meaningless.

Grove and Savich (1979, p 531) also noted that relatively few significance tests existed for ordinal-type data. These were restricted to tests such as chi-square, and the Friedman test for matched groups (Hays, 1973).

Arguments for utilising parametric techniques on ordinal-type data have however been proposed by both researchers (e.g. Anderson, 1961; Kerlinger, 1973), who have advocated the use of parametric statistics to provide substantially more weight to research interpretations, and by statisticians. An example of a statistician who defended the use of parametric statistics on ordinal-type data was Willemsen (1973). She argued that statistical inference depended upon assumptions about the nature of distributions of scores for groups of individuals and was independent of the kinds of measurement procedures that led to the scores in the first place. Thus, she suggested, while the levels of measurement issue was often

discussed in the context of statistics, it was entirely separate from, and independent of, the choice between parametric and non-parametric procedures for statistical inference.

A number of researchers have justified the use of parametric statistical techniques on the grounds of their acknowledged superiority over non-parametric procedures. Grove and Savich (1979), however, proposed a procedure whereby quantified evidence could be presented by the researcher to support such a decision. They suggested the comparison of parametric and non-parametric correlations for a set of data. If the results were found to be consistent, then parametric procedures employing additive assumptions (such as factor analysis and multiple regression) could continue to be used. They further argued that the inclusion of parametric tests, when consistent with non-parametric results:

> 'would not negate any study conclusions but should be considered as additional evidence of rigor'
> (Grove and Savich, 1979 p 531).

It was therefore decided to adopt the following procedure, recommended by Grove and Savich (1979), to address this unresolved argument. Firstly, means and medians for the various responses were computed, and the results under both procedures compared. Secondly, correlation and significance tests were undertaken, utilising both parametric and non-parametric techniques. The parametric correlations were undertaken by computing Pearson's Product-Moment Coefficient ('r'), and the non-parametric correlations were computed using Spearman's 'rho'. The means and medians from the first survey are reported in appendix B-1, and the correlation matrix for the same data is contained in appendix C-1.

The means, medians and correlations were then examined for consistency. If the results had been discovered to be substantially in conflict, this would have precluded the use of parametric statistics in further analysing the data. Grove

and Savich (1979) did not, however, suggest a quantified degree of consistency that should be obtained between the parametric and non-parametric statistics to justify the continuing use of parametric techniques. It was therefore incumbent on the researcher to report his findings, and to allow the reader to evaluate his decision in the light thereof. In this case, 416 correlations between variables were significant at the $p < 0.05$ level, when computed using the non-parametric Spearman's 'rho'. Of these, 398 or 95.7% were also significant at the $p < 0.05$ level, when computed using the parametric Pearson 'r' coefficient. Of the remaining 18 significant Spearman correlations, 14 were significant at the $p < 0.10$ level, when computed using Pearson's 'r'. Thus a total of 412 out of 416, or 99% of the significant ($p < .10$) non-parametric correlations were also significant when computed using parametric correlations.

These findings were deemed to provide an adequate level of consistency between the parametric and non-parametric statistics. It was therefore decided that the researcher was justified in the use of parametric techniques for the testing of the statistical hypotheses, and for conducting the exploratory research analysis.

10.9.3 DETERMINING THE LEVELS OF SIGNIFICANCE

Huysamen (1976, p 192) noted that the selection of the desired level of significance for statistical tests depended upon the amount of risk that the researcher was prepared to accept that a false hypothesis may be accepted. In order to limit this risk of committing a 'Type I' error (Emory and Cooper, 1991 p 523) to acceptable levels, it was decided to set the levels of significance as follows:

- for hypothesis testing purposes, the level of significance was set at $p < 0.05$; and
- for exploratory research purposes, the level of significance was set at $p < 0.10$. To further assist in the evaluation of the exploratory findings, however, the significance thereof would be reported at the $p < 0.10$, $p < 0.05$, $p < 0.01$ and $p < 0.001$ levels.

10.9.4 TWO-TAILED TESTS

The statistical tests in this research were not concerned with the directionality of differences between parameters and the statistics being compared with them. Accordingly, two-tailed tests of significance were employed (Emory and Cooper, 1991 p 522).

10.9.5 TESTING HYPOTHESES OF ASSOCIATION

Hypotheses 1, 2, 3, 4 & 5 were statements of association between variables. To test these hypotheses, extensive use was made of Pearson's product-moment correlation coefficient, 'r'. Such correlations would reveal both the magnitude and direction (i.e. positive or negative) of relationships between the variables of interest (Emory and Cooper, 1991 p 583).

The use of parametric correlational analysis for the testing of hypotheses of association is dependant upon two critical assumptions (Emory and Cooper, 1991 p 587). These are normality of distributions, and linearity of relationships between variables. The extent of normal distributions in the data was assessed by the use of statistics for skewness and kurtosis. The degree of linearity in the relationships was assessed via the scrutiny of scatter plots for the data.

10.9.6 TESTING HYPOTHESES OF MODERATING EFFECTS

Hypotheses 6, 7, 8, 9, 10 & 11 were statements relating to the moderating effects of certain variables on the associations between other variables in the study. To test these hypotheses of moderation, extensive use was made of the technique of moderated multiple regression. This technique is an application of standard multiple regression analysis, and is designed to measure the moderating effects of pre-selected variables on the valid relationships determined in a relational study. It has been used to assess moderating effects of interest by a number of researchers (e.g. Bhagat, 1992; Ferris and Gilmore, 1984; French and Rosenstein, 1984; Mowday and Spencer, 1981; Nunns and Argirys, 1992).

Normal multiple regression analysis provides an indication of the intercorrelations between the variables, the percentage of variance accounted for by each variable, and the magnitude of effects of the variables in the regression (Charoux, 1984 p 210). Moderated multiple regression analysis evaluates the effect on the regression coefficient when the moderator variable and an 'interaction term' are introduced into a regression equation in a stepwise manner (Searfoss and Monczka, 1973 p 546). The introduction of the moderator variable into the regression equation yields a new regression coefficient, 'r (linear)'. The effect of introducing the moderator variable is indicated by the difference between the simple 'r' and 'r (linear)'. The final step in the procedure is to introduce the 'interaction term', which is the product of the predictor variable and the moderator variable, into the regression. The new regression coefficient, 'r (moderated)', is then computed. The extent of the moderator effect is indicated by the difference between 'r (linear)' and 'r (moderated)'. This moderator effect is therefore a measure of the interaction between the predictor (independent) variable and the moderator variable. Student's t distribution, with two-tailed probabilities, were chosen for testing the significance of the correlation coefficients.

Before undertaking a moderated multiple regression procedure, three assumptions underlying multiple regression must be assessed (Nunns and Argirys, 1992 p 42):

- the accuracy of measurement (as indicated by internal consistency tests) should be determined. This was done, as described previously, by the computation and evaluation of Cronbach (1951) alpha coefficients;
- linear relationships between the independent and dependent variables, and between the moderator and dependent variables must be confirmed. Scatter plots were used for this purpose; and
- multicollinearity must be absent, i.e. the independent variables must not be significantly correlated with each other (Emory and Cooper, 1991 p 634). This was assessed by scrutinising the correlation matrices of the data.

Furthermore, to reduce the possibility of spurious results, it is a requirement of moderated multiple regression analyses (Nunns and Argirys, 1992 p 43) that any biographical variables significantly related to a dependent variable must be included as co-variates. Accordingly, after testing for such significant correlations, it was decided to include the following co-variates in the regression equations: Marriage Status; Age; Home Language; Education Level; Work-Place Location (above or below ground); Attendance at the Company's Staff-Orientation Course; Tenure; and Level in the Hierarchy.

10.9.7 SEEKING SUPPORT FOR AN EXPLORATORY PATH MODEL

Path analytical techniques were considered appropriate in the exploratory section of this research. Objectives within this exploratory research analysis were, inter alia:

- to devise a theoretical path model that incorporated previous research and theories on integrated systems of employee participation, and which utilised the variables measured within this study;
- to test this path model using appropriate statistical methodology. The object of this process would be to determine the path model's explanatory utility, in respect of its ability to predict the dynamic, direct inter-relationships between the subject variables under 'integrated' employee participation programmes; and
- arising from the results of testing the path model, to suggest an alternative, improved, model, which would be suitable for further research and theoretical development.

Thus this section of the research study contained both explanatory and exploratory elements. It was categorised by the researcher as 'exploratory', however, because:

- it was primarily hypothesis-generating rather than hypothesis-testing; and
- the major objective was to explore for a path model that might be used by future researchers and commentators to further progress the study of integrated programmes of employee participation.

Buchko (1993, p 638) stated that the purpose of path analysis was to observe the direction and magnitude of effects of a series of determining variables on a dependent variable. The procedure involves the derivation of a set of structural equations, representing the causal processes presumed to be operating among these specified variables. These equations comprise the hypothesised model, and are then evaluated through regression techniques. The resulting coefficients and significance estimates comprise the parameters of the path model. Path analysis assesses the ability of the model to explain the observed correlations between variables.

Asher (1983) stated that the merit of path analysis was that it made theoretical relationships explicit, thereby providing a framework for theory development and testing. This methodology was employed by Buchko (1993) in a study which tested the relationships between the financial value of an E.S.O.P., the perceived influence arising from ownership, employee job satisfaction and staff turnover.

Li (1975) stated that path methodology was not so much concerned with prediction as to the proposal of a plausible interpretation of the relationships between variables. Path analysis is thus concerned with devising a causal structure compatible with the observed data.

Cohen and Cohen (1983, p 14) stated that the basic strategy for the analysis of a causal model started with the statement of a theory in terms of hypothesised variables. This involved an explicit statement of which variables impacted on which others, and which were not related. Such statements would usually be aided by path diagrams. The recorded data from observations would then be analysed to determine whether they were consistent with the path model. The strength of the path parameters would also be estimated. If the model failed to fit the data, it would be rejected, while a good fit of the model would allow it to survive. The model would not, however, be proven as other models might provide equal or better fits to the data.

Multiple regression and correlation analysis were utilised as the primary analytical tools of the path analytic procedures. These have already been described in this chapter. The complexity of the path analysis method is dependent, however, on whether the model being tested is recursive or non-recursive in nature. Recursive models are those in which the variables can be fully sequenced in a hierarchy such that no variable that is a cause of a higher variable is an effect of a subsequent variable. In contrast, non-recursive models are characterised by reciprocal causation or causal feedback loops. Cohen and Cohen (1983, p 355) stated that recursive models could be estimated by ordinary regression equations. Non-recursive models required more complex estimation techniques, usually incorporating simultaneous equations. The path model tested in this study was recursive in nature, as will be described in detail in chapter 13. It was thus analysed using simple regression equations.

Having estimated the parameters of the path model, it was necessary to establish that they were statistically significant, i.e. non-zero. Cohen and Cohen (1983) stated that this could be achieved by the routine 't' test, for the significance of a 'beta' in a regression equation. This method was therefore used for assessing the statistical significance of the path coefficients.

10.10 ASSUMPTIONS AND LIMITATIONS OF THE RESEARCH

This section will present major assumptions and limitations of the research.

In the exploratory path analytical procedures, assumptions of causal order and causal closure (Kim and Kohout, 1990) were made.

A limitation of the study related to the confinement of the research to a single organisation. This was unavoidable, in terms of the time and resources available. The findings of this study must therefore be treated with an appropriate degree of caution, when considering their generalisability to

other industries, and indeed even to other South African gold mines.

A second limitation of the study was the restriction thereof to a limited range of attitudinal and behavioural variables. This was also unavoidable in terms of the practical restrictions of performing a single research project. Nevertheless, a significant number of variables were considered, and these were only selected after a careful review of the literature. It remains a possibility, however, that relevant variables may have been omitted from the study. Further, by the very nature of an exploratory field survey of this type, conducted in a single organisation, it was not possible to control for the effects of all exogenous factors. An example of this problem lay in the lack of control exercised over the external 'political environment'. This changed significantly between the two data-collecting surveys (the first fully-inclusive democratic elections in South Africa were held during the intervening period). The research findings must therefore be considered in the context of this significant change in an uncontrolled variable.

10.11 CONCLUSION

This chapter outlined the major elements of the research design, including the procedures through which the measuring instruments were devised, and the statistical methodology employed to manipulate the data.

All the statistical procedures were executed by means of the S.A.S. statistical software package, in the procedures guide of which (S.A.S., 1990), detailed explanations of the various techniques are provided.

The following chapter reports the results of the tests performed to evaluate the reliability and validity of the measuring instruments. The explanatory research findings, including the results from testing the statistical hypotheses, will be reported in chapter 12.

THEME 3: EMPIRICAL

The primary aim of this theme is to report the empirical research findings of the study. These will be reported within three sections:

- section 1 comprises chapter 11. This chapter will report on the results of tests undertaken to assess the reliability and validity of the study's questionnaire instruments;
- section 2 comprises chapter 12. This chapter will report the explanatory, hypothesis-testing results. This section is therefore primarily concerned with reporting the results of testing propositions from within the 'Model of Integrated Employee Participation (incorporating moderating effects)', described in chapter 8; and
- section 3 comprises chapters 13 and 14. These chapters will report the exploratory research results. This section is primarily concerned with exploring the dynamic interrelationships between the variables of the study, in order to clarify the means via which the effects of 'integrated participation schemes' are achieved. Chapter 13 will describe the development, and subsequent testing at all levels of the organisational hierarchy, of a further path model of integrated employee participation. Chapter 14 will briefly report the 'qualitative' research results, extracted from responses to the 'open-ended' questionnaire items.

CHAPTER 11

THE RELIABILITY AND VALIDITY OF THE MEASURING INSTRUMENTS

11.1 INTRODUCTION

The main objective of this chapter is to report the results of tests undertaken to assess the reliability and validity of the measuring instruments. The statistical procedures used in these tests were described, in detail, in chapter 10. In achieving this objective, the following sub-objectives will be addressed in sequence:

- the results of tests undertaken to assess the reliability of the measuring instruments will be reported; and
- the results of the factor analysis procedures, undertaken in order to assess the factor structure of the measuring instruments, will be reported.

11.2 THE RELIABILITY OF THE MEASURING INSTRUMENTS

The reliability coefficient of a measurement test is defined as the squared correlation between the observed value and the true value. (S.A.S. Procedures Guide, 1991 p 223).

Cronbach Coefficient Alpha is a measure of internal consistency (reliability). It is designed to measure the degree to which instrument items are homogeneous and reflect the same underlying construct(s) (Emory and Cooper, 1991 p 188). The coefficient alpha has a maximum value of one. A low coefficient of internal consistency may be interpreted as meaning that the test is not consistently measuring the same dimension.

Cronbach Coefficient Alphas were computed for each of the employee response variables, in respect of the entire samples, for both data-collection surveys. The coefficients are reported in appendices B-1 and B-2, and are summarised in table 11.1.

Table 11.1

Cronbach Alpha Reliability Coefficients

Variable	First Survey (n = 525)	Second Survey (n = 234)
PFNPAR	0.7282	0.7260
PPAGWD	0.8018	0.8029
PPGOAL	0.7593	0.7656
PPSAFE	0.8019	0.7913
FINSAT	0.7853	0.8011
GWDSAT	0.6929	0.7176
JOBSAT	0.7450	0.7370
ATTCOM	0.6954	0.7218
PRSTAY	0.6542	0.6188
LOCCONT	0.7114	0.7398
NEEDIND	0.5651	0.4784
AUTHORM	0.5820	0.5039
PERCATT	0.7365	0.7206
PERCDIF	0.6580	0.5776
PERCEVF	0.7580	0.7761
PERCEVA	0.8042	0.8181
PEROLAP	0.6972	0.6569
PERFEED	0.7533	0.7567
COMFINP	0.8012	0.7985
COMGWDP	0.7690	0.7832
COMGOAL	0.7562	0.7558
COMSAFE	0.7663	0.7641
SELPERF	0.7713	0.7600

The Cronbach alpha coefficients obtained ranged from 0.5651 to 0.8042 for the first survey, and from 0.4784 to 0.8181 for the second survey. After referring to reliability coefficients obtained by prior researchers using attitudinal measures (e.g. Charoux, 1984; Coldwell, 1979), it was felt that for this study, coefficients of below 0.6500 were causes for concern. Only 6 out of the 46 coefficients obtained fell below this level, and thus the reliability scores were regarded as generally satisfactory.

11.3 THE FACTOR STRUCTURE OF THE MEASURING INSTRUMENTS

This section describes the factor analysis procedures undertaken, in order to assess the discriminant and convergent validity of the measuring instruments. These procedures were undertaken on the data from the first data-collection survey only.

The main purpose of undertaking the factor analysis was to investigate whether the variables purportedly measured were indeed separate constructs. It was therefore necessary to explore for factor analysis solutions that identified unique factors that each loaded upon groups of items measuring discrete variables.

11.3.1 THE FACTOR ANALYSIS METHODOLOGY

Due to the large number of measured variables (23) and questionnaire items relating thereto (130), it was decided to adopt the following structured procedure for the factor analysis:

- all 130 questionnaire items were initially factor-analysed together, to achieve an initial overview of the data. This provided an indication of the extent to which factors were loading onto similar questionnaire items as expected; and
- separate factor analyses were then undertaken in turn, on each 'category' of variables, as previously defined in section 10.4.4 of chapter 10. The purpose of these separate analyses was to obtain a clearer picture of the factor structures and the loadings of the individual factors. These procedures followed the example of similar 'grouped' factor analyses undertaken by Coldwell (1979, p 158).

Thus an initial factor analysis was undertaken on all the questionnaire items, followed by separate analyses on the items measuring variables within the following independent, moderator and outcome categories:

- employees' perceived extent of participation (independent variables);
- employee personality constructs (moderator variables);
- employee perceptions of the organisation's system of managerial communication and control (moderator variables);
- employee perceptions of management's commitment to employee participation (moderator variables);

- employee attitudes towards participation and work (outcome variables); and
- employee performance and stability constructs (outcome variables).

The 'SUPPERF' ('Employee Supervisor-Rated Performance') variable could not be factor analysed as it was composed of only a single score for each employee. This had been separately obtained from the organisation's performance evaluation system, as reported in the previous chapter.

A description of the procedure adopted for assessing the factor structure of the entire questionnaire will be reported in the following section.

11.3.2 THE FACTOR STRUCTURE OF ALL THE QUESTIONNAIRE ITEMS

Principal-factor analysis was used to extract the initial factors from the data. The procedure identified 129 initial factors. As would be expected in an initial unrotated solution (Kim, 1975), the first factor loaded strongly on most items. This factor accounted for 26.98% of the total variance of the variables, and could thus be regarded as a 'general factor'. Also, as predicted by Kim (1975, p 482), the second factor was bi-polar, with approximately half its loadings being positive, and the other half being negative. The remaining factors produced by this initial factor solution were similarly bi-polar. Such factors were difficult to interpret, and rotation techniques were therefore deemed appropriate, in order to simplify the factor structure and to achieve more meaningful factor patterns (Emory and Cooper, 1991 p 664; Kim, 1975 p 473).

The Kaiser Measure of Sampling Adequacy for this overall factor analysis was 0.855. Kaiser and Rice (1974) described M.S.A. values in the range of 0.80 to 0.90 as 'meritorious', and the M.S.A. obtained in this instance therefore supported the use of factor analysis on this data.

The object of factor rotation is to seek an improved solution that will be more informative than others. Rotation of factor solutions is based on the principle that there are many statistically equivalent ways to establish the underlying dimensions of a data set. The axes dividing the multidimensional space occupied by the data are positioned arbitrarily (in the case of oblique rotations). There is an infinite number of alternate reference frames that could be utilised to reproduce the factor matrix.

Prior to rotating the factors, it was necessary to decide on the number of factors to retain for rotation. The S.A.S. Factor procedure had identified 39 significant factors, using the 'proportion' criterion. This method of factor extraction selected only those factors with Eigen values greater than the figure obtained by dividing the total variance by the number of items being analysed.

An orthogonal 'Varimax' rotation was then undertaken on these 39 factors. Orthogonal rotations retain zero correlations between the factors, by keeping their axes at right-angles to each other in the data hyperspace. The results were encouraging, with significantly high (range = 0.4 to 0.8) factor scores, and with many factors loading onto groups of similar questionnaire items as expected.

It was felt, however, that an oblique rotation procedure would be more appropriate for this data-set. Oblique rotations do not impose orthogonal (uncorrelated) conditions on the factor axes. This was a more realistic assumption (Kim, 1975 p 473), by acknowledging that the factors might be correlated with each other. Indeed, hypothesised correlations between many of the subject variables was a fundamental pillar of this study.

Therefore an oblique 'Promax' rotation was then performed on all 39 factors. The results of this rotation were also encouraging, with significant standardised regression coefficients ranging from 0.40 to 0.88. As had been the case

with the 'Varimax' rotated solution, factors were observed to load onto groups of items from common variables, as expected.

The reference structure of semi-partial correlations between variables and common factors, after the removal of the effects of other common factors, was not identical to the 'Promax' rotated factor pattern. This indicated a degree of correlation between the factors, as expected. Further, the semi-partial correlations were also significant, ranging from $r = 0.41$ to $r = 0.71$.

Separate factors were observed to load strongly onto groups of questionnaire items from a number of variables ('FINSAT'; 'PPAGWD'; 'PERFEED'; 'COMSAFE' and 'SELPERF'), as anticipated. The results of this initial factor analysis of the whole questionnaire were therefore encouraging.

Nevertheless there was cause for concern in that, in some instances, factors were found to be loading jointly and significantly upon items from more than one hypothesised variable. Due to the overall complexity of this factor solution, it was decided not to report or attempt to interpret it in this thesis. Suffice it to say that certain variables, for example safety-related measures, might be expected to be loaded upon by various factors because of their general importance to employee work attitudes.

To obtain greater clarity as to the factor structure of the questionnaire, and in order to obtain a simple structure, the separate, 'grouped' factor analyses were then undertaken. These will be described in detail in the following sections of this chapter.

The procedure undertaken in the factor analysis for each category of variables followed the same sequence of steps as that undertaken in the initial overview procedure: principal-factor extraction was followed by orthogonal ('Varimax') and oblique ('Promax') rotations of the factor solutions. The 'Varimax' and 'Promax' rotated solutions were again compared

in each case, and found to be broadly consistent. However, due to anticipated inter-correlations between many of the variables of this study, it was decided to concentrate and report on the oblique rotated factor solutions in the 'grouped' analyses.

The factor analyses undertaken on each 'category' of variables will be reported in the following sections.

11.3.3 THE FACTOR STRUCTURE OF THE INSTRUMENTS MEASURING EMPLOYEES' PERCEIVED EXTENT OF PARTICIPATION

This factor analysis procedure initially analysed 23 items from the four measured 'participation' independent variables:

- 'PFNPAR' ('Perceived Extent of Financial Participation');
- 'PPGOAL' ('Perceived Extent of Participation in Work Target Setting');
- 'PPAGWD' ('Perceived Extent of Participation in General Work-Related Decision-Making'); and
- 'PPSAFE' ('Perceived Extent of Participation in Safety-Related Decision-Making').

Four factors were selected for extraction, using the S.A.S. 'proportion' criterion previously described, in the initial principal-factor procedure. Upon rotation, the items for 'PFNPAR' and 'PPAGWD' were loaded upon separately and significantly by two different factors. Five items from 'PPGOAL' were loaded upon by a third factor, but the remaining items from 'PPGOAL' and all the items from 'PPSAFE' were loaded upon by various different factors, with no discernable pattern emerging.

It was suspected that the items measuring the variable 'PPSAFE' ('Perceived Extent of Participation in Safety-Related Decision- Making') may have had a more 'generalist' meaning to the respondents, as safety considerations are relevant to all areas of work in the mining industry.

A further factor analysis was therefore undertaken on the items measuring the 'participation' variables of 'PFNPAR',

'PPGOAL' and 'PPAGWD' only, i.e. excluding those that measured 'PPSAFE'. The intercorrelation matrix on these 19 items was initially scrutinised, to assess the degree of association between the scores on items measuring each variable. The intercorrelation matrix is contained in appendix C3-1. The correlations obtained ranged from zero to r = 0.59. Items were observed to generally correlate with other items from the same variable.

Three factors were extracted for rotation by the 'proportion' criterion. The resulting oblique factor structure is reproduced in table 11.2, which also reports Kaiser's Measures of Sampling Adequacy for each item, and for the overall analysis. In this and subsequently-reported factor structures, only those items with semi-partial correlations equal to, or exceeding, r = 0.33 have been considered for interpretation. The three interpretable factors obtained in this instance were:

- Factor one: Perceived Extent of Participation in Work-Target Setting;
- Factor two: Perceived Extent of Participation in General Work-Related Decision-Making; and
- Factor three: Perceived Extent of Financial Participation.

Kaiser and Rice (1974) described M.S.A. values in the range of 0.80 to 0.90 as 'meritorious'. Since an overall M.S.A. of 0.862 was obtained in this instance, the validity of this factor analysis procedure was supported. The factor correlation matrix for this solution is also reported, in table 11.3

11.3.3.1 Discussion of the Factors Obtained

This factor structure reflected a much clearer picture than had been obtained in the previous analysis (which had included the 'perceived extent of participation in safety-related decision-making' items). Except for two items ('PPGOAL' item 1, which was loaded upon moderately by factor two, and 'PPGOAL' item 9, which failed to be loaded upon significantly by any factor), all items were loaded upon significantly by the three separate factors, as expected. The moderate loading on 'PPGOAL' item 1 by factor number two was plausible, as participation in work-target setting could overlap with the more general construct of participation in general work-related decision-making.

These factors were therefore interpreted in terms of the originally-hypothesised constructs of the measuring instruments as indicated below:

- Factor one related to the 'PPGOAL' variable and was therefore labelled 'Perceived Extent of Participation in Work-Target Setting'. The items that were loaded upon significantly (i.e. at a magnitude of 0.33 and above) by this factor, in decreasing order of magnitude, were 'PPGOAL' items 5, 8, 6, 7, 4, 2, and 3. Item 5, which was loaded upon with the highest magnitude, stated 'My supervisor has listened to my problems about work targets'. The only 'PPGOAL' items not to be loaded upon significantly by this factor were item 1 ('I have a big say in the setting of my work targets'), and item 9 ('I have suggested changes for targets in my work'). There was nevertheless a clear indication that the underlying dimension of this factor related to the employee's perceived extent of participation in the setting of his work targets;
- Factor two related to the 'PPAGWD' variable and was therefore labelled 'Perceived Extent of Participation in General Work-Related Decision-Making'. The items that were loaded upon by this factor, in decreasing order of magnitude, were 'PPAGWD' items 3, 2, 1 and 4, and 'PPGOAL' item 1. Thus all the 'PPAGWD' items were loaded

upon together by this factor. They are listed in appendix A-6. The moderate loading on the 'PPGOAL' item by this factor was not felt to be problematic, as a modest degree of overlap between participation in general and specific areas of decision-making was plausible. There was thus a clear indication that the underlying dimension of this factor related to an employee's perceived extent of participation in general decision-making relating to his work; and

- Factor three related to the 'PFNPAR' variable and was therefore labelled 'Perceived Extent of Financial Participation'. The items that were loaded upon by this factor, in decreasing order of magnitude, were 'PFNPAR' items 2, 5, 6, 1, 3 and 4 (see appendix A-2). These comprised all the items measuring this variable, and the factor did not load significantly on any other items. There was thus a clear indication that the underlying dimension of this factor related to employees' perceived extent of financial participation.

The factor structure obtained in this analysis was particularly significant in its clear distinction between the hypothesised constructs of decision-making participation (factors one and two), and financial participation (factor three). This was further supported by the low ($r = 0.23$) correlation between factors two and three, as reflected in table 11.3. The remaining inter-factor correlations were also modest ($r = 0.34$ and $r = 0.38$), which provided yet further support for the separate dimensions identified in the factor analysis.

The conclusion drawn from this analysis was that the constructs relating to employees' perceived extent of participation were valid.

11.3.4 THE FACTOR STRUCTURE OF THE INSTRUMENTS MEASURING EMPLOYEE PERSONALITY CONSTRUCTS

This factor analysis procedure analysed 22 questionnaire items from the three measured 'personality' moderator variables:

- 'LOCCONT' ('Work Locus of Control');
- 'NEEDIND' ('Need for Independence'); and
- 'AUTHORM' ('Authoritarianism').

The intercorrelation matrix of these 22 items was initially scrutinised, to assess the degree of association between the scores on items measuring each variable. The intercorrelation matrix is contained in appendix C3-2. The highest correlation obtained was r = 0.37. Items were observed to generally correlate with other items from the same variable.

Three factors were extracted, using the 'proportion' criterion. Upon oblique rotation, the three factors loaded significantly upon the majority of items, in the manner expected. The rotated factor solution is presented in table 11.4. The table also presents Kaiser Measures of Sampling Adequacy for each item, and for the overall analysis.

The three interpretable factors obtained were labelled:

- Factor one: Authoritarianism;
- Factor two: Need for Independence; and
- Factor three: Work Locus of Control.

Table 11.4

'Promax' Rotated Factor Structure
'Personality Variables'
(n = 525)

Variable /Item		Factor One	Factor Two	Factor Three	H2	M.S.A.
LOCCONT:	1	-0.06	-0.04	0.63 *	0.409	0.584
	2	0.01	0.10	0.36 *	0.142	0.543
	3	0.05	0.03	0.62 *	0.392	0.608
	4	0.20	0.03	0.60 *	0.429	0.617
	5	0.04	0.58 *	0.10	0.390	0.747
NEEDIND:	1	0.01	0.24	0.19	0.100	0.612
	2	0.00	0.24	-0.07	0.071	0.554
	3	0.01	0.43 *	-0.28	0.262	0.664
	4	-0.15	0.23	0.15	0.077	0.499
	5	0.01	0.41 *	-0.17	0.204	0.686
	6	0.05	0.48 *	0.12	0.277	0.696
	7	-0.11	0.58 *	-0.18	0.387	0.628
	8	0.07	0.46 *	0.06	0.227	0.667
	9	0.13	0.20	-0.17	0.102	0.673
AUTHORM:	1	0.47 *	0.03	0.07	0.259	0.704
	2	0.44 *	0.18	-0.32	0.378	0.719
	3	0.44 *	0.07	0.27	0.331	0.776
	4	0.60 *	0.17	-0.03	0.366	0.728
	5	0.51 *	-0.05	-0.08	0.316	0.724
	6	0.61 *	0.23	0.03	0.380	0.675
	7	0.35 *	0.25	-0.29	0.328	0.707
	8	0.54 *	0.11	0.04	0.380	0.782
Overall M.S.A.:						0.678
Variance explained by each factor:		2.13	1.89	1.80		
% variance explained	:	34.30	30.43	28.99		
Cumulative % variance explained	:	34.30	64.73	93.72		

The S.A.S. user's manual (1990, p 798) advised that 'remedial action' (e.g. deleting items) was only appropriate when the M.S.A. measure obtained was below 0.5. Accordingly, the overall M.S.A. value of 0.678 obtained here was regarded as adequate in supporting the use of factor analysis as a statistical technique for manipulation of this data-set.

The factor correlation matrix for this solution is also reported, in table 11.5

Table 11.5

Factor Correlation Matrix: 'Personality Variables'

	FACTOR 1	FACTOR 2	FACTOR 3
FACTOR 1	1.00	0.28	0.09
FACTOR 2	0.28	1.00	-0.04
FACTOR 3	0.09	-0.04	1.00

11.3.4.1 Discussion of the Factors Obtained

This analysis revealed a clear structure, with the three separate factors loading upon most items in the manner anticipated. Only 'NEEDIND' items 1, 2, 4 and 9 were not loaded upon significantly by any factor.

The three factors within this structure were interpreted, in terms of the originally hypothesised constructs of the measuring instruments, as follows:

- Factor one related to the 'AUTHORM' variable, and was therefore labelled 'Authoritarianism'. All of the items constituting this variable were loaded upon by this factor. In decreasing order of magnitude, the factor loaded upon these items in the sequence 6, 4, 8, 5, 1, 2, 3 and 7. The 'AUTHORM' items can be found in appendix A-13. No other items were loaded upon significantly by factor one. There was therefore unanimous support for interpreting the underlying dimension of this factor as relating to the personality construct of authoritarianism;
- Factor two related to the 'NEEDIND' variable and was therefore labelled 'Need for Independence'. Of the six items loaded upon significantly by this factor, five were from the 'NEEDIND' instrument. However 'LOCCONT' item 5 ('If you failed to pass a training course it would be because it is difficult to learn so many things at one time') was also loaded upon by this factor. Indeed, its magnitude was the highest of all item-loadings, and this

required interpretation. It was therefore suggested that the factor related to a broader dimension of employee 'Need for Independence' than had been anticipated. This broader dimension was therefore interpreted as need for independence in determining both the volume and the method of performing an employee's work. The remaining items loaded upon by this factor, in descending order of magnitude, were 'NEEDIND' items 7, 6, 8, 3 and 5. Item 7, for instance, stated 'If I make a decision, it is hard for someone else to change my mind'. The 'NEEDIND' items can be found in appendix A-12. There was thus a clear indication that the underlying dimension of this factor related to employees' need for independence;

- Factor three related to the 'LOCCONT' variable and was therefore labelled 'Work Locus of Control'. In descending order of magnitude, the items loaded upon by this factor were numbers 1, 3, 4 and 2 from the 'LOCCONT' variable. Item 1, for instance, stated 'If you tried to make friends with someone at work, but didn't succeed it would probably be because you had not tried in the right way'. The 'LOCCONT' items are reproduced in appendix A-11. The only item from the 'LOCCONT' variable that was not loaded upon significantly by this factor, as discussed above, was number 5. There was thus a clear indication that the underlying dimension of this factor related to employees' work loci of control.

The factor correlation matrix, reported in table 11.5, reflected low correlations between the factors. This lent further support to the interpretation that the factor analysis had identified three discrete underlying personality dimensions.

The conclusion drawn from this analysis was that the moderator variables relating to employees' personalities were valid. The single inconsistent loading on 'LOCCONT' item 5 was not felt to be problematic, because:

- there was a plausible overlap between the constructs of 'need for independence' and 'work locus of control';

- the instrument items had been extracted and adapted from established pre-tested instruments; and
- in this study the 'personality' variables were to be introduced as a combined set of moderators.

11.3.5 THE FACTOR STRUCTURE OF THE INSTRUMENTS MEASURING EMPLOYEE PERCEPTIONS OF THE ORGANISATION'S SYSTEM OF MANAGERIAL COMMUNICATION AND CONTROL

This factor analysis procedure analysed 25 questionnaire items from the six measured 'managerial communication and control' moderator variables:

- 'PERCATT' ('Perceived Attainability of Work Targets');
- 'PERCDIF' ('Perceived Difficulty of Work Targets');
- 'PERCEVF' ('Perceived Fairness of Immediate Supervisor's Style of Performance Evaluation');
- 'PERCEVA' ('Perceived Ambiguity of Immediate Supervisor's Style of Performance Evaluation');
- 'PEROLAP' ('Perceived Extent of Overlap of Employee's Assigned Areas of Responsibility and Control'); and
- 'PERFEED' ('Perceived Extent of Feedback Relating to Employee's Performance').

The intercorrelation matrix of these 25 items was initially scrutinised, to assess the degree of association between the scores on items measuring each variable. The intercorrelation matrix is contained in appendix C3-3. The highest correlation obtained was r = 0.58. Items were observed to correlate with other items from the same variables. However a number of items also correlated with items from other variables, which indicated that the factor structure might be complex.

Five factors were extracted, using the 'proportion' criterion. Upon oblique rotation, a complex factor pattern was obtained. The rotated factor solution is presented in table 11.6, which also reports Kaiser Measures of Sampling Adequacy for each item, and for the overall analysis.

Table 11.6

'Promax' Rotated Factor Structure
'Managerial Control System Variables'
(n = 525)

Variable /Item	Factor One	Factor Two	Factor Three	Factor Four	Factor Five	H2	M.S.A.
PERCATT1	0.12	0.41 *	0.30	-0.17	-0.06	0.396	0.800
2	-0.09	0.15	0.67 *	-0.05	-0.01	0.490	0.596
3	-0.04	0.24	0.24	0.51 *	0.08	0.465	0.774
4	-0.09	-0.12	0.69 *	0.34 *	0.11	0.583	0.503
PERCDIF1	-0.03	-0.35 *	-0.31	-0.05	0.17	0.365	0.758
2	0.09	-0.05	-0.62 *	0.06	0.23	0.497	0.649
3	-0.11	-0.09	0.04	-0.11	0.61 *	0.417	0.651
4	-0.08	0.25	-0.08	0.01	0.68 *	0.505	0.487
PERCEVF1	0.32	0.33 *	-0.01	0.16	-0.10	0.494	0.859
2	0.23	0.30	-0.12	0.24	-0.17	0.452	0.856
3	0.21	-0.12	0.32	-0.13	0.02	0.176	0.508
PERCEVA1	0.27	0.33 *	-0.05	0.17	-0.17	0.478	0.895
2	0.44 *	0.07	0.00	0.35 *	-0.01	0.490	0.888
3	0.50 *	0.10	0.01	0.25	0.12	0.508	0.865
4	0.53 *	0.07	0.10	0.23	0.00	0.521	0.877
PEROLAP1	0.20	0.51 *	-0.03	-0.13	0.17	0.473	0.899
2	-0.05	0.67 *	-0.02	-0.07	0.21	0.522	0.831
3	-0.11	0.63 *	-0.04	0.01	0.22	0.457	0.823
4	-0.07	0.10	0.06	-0.62 *	0.02	0.417	0.659
5	0.14	0.26	0.17	-0.47 *	-0.20	0.385	0.726
PERFEED1	0.56 *	0.11	-0.06	-0.19	0.04	0.458	0.905
2	0.71 *	-0.11	0.04	-0.01	-0.02	0.562	0.864
3	0.65 *	0.03	-0.07	-0.02	0.06	0.548	0.846
4	0.66 *	-0.06	-0.07	-0.13	0.01	0.485	0.824
5	0.24	-0.25	0.38 *	-0.14	0.39 *	0.450	0.486
Overall M.S.A.:							0.819
Variance explained by each factor:	3.83	2.81	1.94	1.63	1.39		
% variance explained:	33.05	24.25	16.74	14.06	11.90		
Cumulative % variance explained:	33.05	57.30	74.04	88.10	100.00		

The five interpretable factors obtained were labelled:

- Factor one: Feedback on Work Performance;
- Factor two: Ease of Work Target Attainment;
- Factor three: Perceived Attainability of Work Targets;
- Factor four: Perceived Overlap Between Responsibilities and Capabilities; and
- Factor five: Perceived Inability to Attain Work Targets.

The overall M.S.A. value of 0.819 was, according to Kaiser and Rice's (1974) categorisation, 'meritorious'. The factor correlation matrix for this solution is also reported, in table 11.7

TABLE 11.7

Factor Correlation Matrix:
'Managerial Control System Variables'

	FACTOR 1	FACTOR 2	FACTOR 3	FACTOR 4	FACTOR 5
FACTOR 1	1.00	0.42	0.05	0.16	-0.01
FACTOR 2	0.42	1.00	0.04	0.26	-0.20
FACTOR 3	0.05	0.04	1.00	-0.01	-0.12
FACTOR 4	0.16	0.26	-0.01	1.00	-0.10
FACTOR 5	-0.01	-0.20	-0.12	-0.10	1.00

11.3.5.1 Discussion of the Factors Obtained

This section presents an interpretation of the complex factor structure for this set of 'managerial control system' variables. Three items ('PERCATT' item 4, 'PERCEVA' item 2, and 'PERFEED' item 5) were loaded upon significantly by more than one factor. Due to the relatively small number of items comprising each variable in this category, they will be included in the discussion of the factor structure. Two items ('PERCEVF' items 2 and 3) were not loaded upon significantly by any factor.

The five factors within this structure were interpreted as indicated below:

- Factor one was labelled 'Feedback on Work Performance'. This was due to the predominance of loadings by this factor upon 'PERFEED' items. In decreasing order of

magnitude, the items that were loaded upon by factor one were 'PERFEED' items 2, 4, 3, and 1, followed by 'PERCEVA' items 4, 3 and 2. The heaviest-loading, upon 'PERFEED' item 2, suggested the nature of this factor. It was 'I have received a lot of comments from my supervisor about how well I do my job'. The 'PERFEED' items are contained in appendix A-19. The three 'PERCEVA' items which were also loaded upon by this factor all related to feedback about the employees' work. For example 'PERCEVA' item 4 stated 'I understand my supervisor's feelings about my performance' (see appendix A-17). There was thus a clear indication that the underlying dimension of this factor related to the extent of feedback received by employees about their work performance;

- Factor two was labelled 'Ease of Work Target Attainment'. In decreasing order of magnitude this factor loaded upon: 'PEROLAP' items 2, 3 and 1, 'PERCATT' item 1, 'PERCDIF' item 1, 'PERCEVF' item 1 and 'PERCEVA' item 1. The item with the heaviest loading, 'PEROLAP' item 2, was 'I get enough cooperation from other workers to enable me to get my job done'. The other items which were loaded upon by this factor also related to potential barriers to the attainment of work targets. For example, 'PERCATT' item 1 stated 'I shouldn't have too much difficulty in reaching my work targets; they are fairly easy'. 'PERCDIF' item 1 stated 'My work targets are very easy'. There was therefore a clear indication that the underlying dimension of this factor related to the ease with which employees perceived they could attain their work targets;
- Factor three was labelled 'Perceived Attainability of Work Targets'. This was suggested by the heavy loadings by this factor, upon 'PERCATT' items 4 and 2. Item 4, the item with the heaviest loading, stated 'My work targets are too difficult: I will never reach them'. Item 2 stated 'My work targets are quite difficult to reach'. This factor also loaded upon items from other variables. The loading on 'PERCDIF' item 2 was the next heaviest and stated 'The work goals set on this mine are very difficult'. 'PERFEED' item 5 stated 'My supervisor does

not often let me know how well I am doing my work'. Although this item was also loaded upon, slightly more heavily, by another factor it was plausible that it related to the dimension underlying this factor, which was work-target attainability (if employees are not provided with feedback about their work, they will be less certain of their progress towards achieving their work targets);

- Factor four was labelled 'Perceived Overlap between Responsibilities and Capabilities'. This construct was an extension of the 'PEROLAP' variable of 'perceived extent of overlap of employee's assigned areas of responsibility and control', which was concerned with limitations on an employee's capability to perform his work due to the lack of authority granted to him by his employer. The interpretation of this factor went further, including the employee's own skills and effort levels as potential limiting factors. Thus 'PERCATT' item 3 ('If I work very hard, I am sure that I can reach my work targets') was the second-heaviest loaded item by this factor. The strongest-loaded item, 'PEROLAP' item 4, stated 'I have had to explain to my supervisor things that have gone wrong, when I have had no control over them'. The remaining loadings by this factor, in decreasing order of magnitude, were upon 'PEROLAP' item 5, 'PERCEVA' item 2, and 'PERCATT' item 4. There was thus a clear indication that the dimension underlying this factor related to the degree of perceived overlap between an employee's assigned work responsibilities and his capabilities to perform the assigned work; and
- Factor five was labelled 'Perceived Inability to Attain Work Targets'. The loadings by this factor, in decreasing order of magnitude, were upon 'PERCDIF' items 4 and 3, and 'PERFEED' item 5. 'PERCDIF' item 4 stated 'I will need a lot of skill and knowledge to reach my work targets', while item 3 stated 'My work targets will require a great deal of effort from me to complete them'. Thus the focus of the underlying dimension of this factor would appear to have been more on the employee's

abilities than on the work targets themselves. This was supported by the content of 'PERFEED' item 5 ('My supervisor does not often let me know how well I am doing'). This item can be construed as relating to feedback on an employee's own abilities, rather than the difficulty of his work targets.

The factor intercorrelation matrix revealed a set of generally low correlations between these factors. This supported the conclusion that the factor analysis had produced five distinct factors. Only the correlation between factors one and two was quite strong ($r = 0.42$). This was plausible, in terms of the above interpretations, as effective feedback on an employee's work performance would be expected to aid the attainment of his work targets, by making them more comprehensible and focused.

There nevertheless was cause for concern in the above interpretation of the factor structure. The analysed items had not been loaded upon as anticipated, and the factors had been labelled somewhat differently from the original variables. Further, there appeared to be an argument for consolidating variables in this section. The hypothesised constructs of 'PERCATT' ('Perceived Attainability of Work Targets') and 'PERCDIF' ('Perceived Difficulty of Work Targets') were closely related. Similarly, the hypothesised constructs of 'PERCEVF' ('Perceived Fairness of Immediate Supervisors' Style of Performance Evaluation') and 'PERCEVA' ('Perceived Ambiguity of Immediate Supervisors' Style of Performance Evaluation') were closely related. Many of the items from these variables had been loaded upon by different factors. In addition, it was noted that two of the three 'PERCEVF' items had not been loaded upon significantly by any factor, and that the third item had only been loaded upon at a magnitude of 0.33. There was thus a strong case for the elimination of this variable, or for combining it with another.

Accordingly it was decided to combine certain of the variables in this category. The details of this decision will be reported in section 11.3.9.

11.3.6 THE FACTOR STRUCTURE OF THE INSTRUMENTS MEASURING EMPLOYEE PERCEPTIONS OF MANAGEMENT'S COMMITMENT TO EMPLOYEE PARTICIPATION

This factor analysis procedure analysed 17 questionnaire items from the four measured 'managerial commitment' moderator variables:

- 'COMFINP' ('Perceived Extent of Managerial Commitment to Financial Participation');
- 'COMGOAL' ('Perceived Extent of Managerial Commitment to Participation in Work-Target Setting');
- 'COMSAFE' ('Perceived Extent of Managerial Commitment to Participation in Safety-Related Decision-Making'); and
- 'COMGWDP' ('Perceived Extent of Managerial Commitment to Participation in General Work-Related Decision-Making').

The intercorrelation matrix of these 17 items was initially scrutinised, to assess the degree of association between the scores on items measuring each variable. The intercorrelation matrix is contained in appendix C3-4. The highest correlation obtained was r = 0.65. Items generally correlated with other items from the same variables. However a number of items also correlated with items from other variables, which indicated that the factor structure might be complex.

Three factors were extracted, using the 'proportion' criterion. Upon oblique rotation, a complex factor pattern was obtained. The rotated factor solution is presented in table 11.8, which also contains Kaiser Measures of Sampling Adequacy for each item, and for the overall analysis.

The three interpretable factors obtained were labelled:

- Factor one: Managerial Encouragement to Achieve Work Targets;
- Factor two: Managerial Commitment to Participation in Safety-Related Decision-Making; and

- Factor three: Managerial Commitment to Integrated Participative Management.

Table 11.8

'Promax' Rotated Factor Structure
'Managerial Commitment Variables'
(n = 525)

Variable /Item	Factor One	Factor Two	Factor Three	H2	M.S.A.
COMFINP: 1	0.69 *	-0.02	-0.02	0.463	0.870
2	0.28	0.20	0.13	0.208	0.839
3	0.39 *	0.07	0.42 *	0.452	0.869
COMGOAL: 1	0.04	0.14	0.22	0.095	0.714
2	0.57 *	0.19	0.06	0.475	0.930
3	0.64 *	0.09	0.02	0.477	0.913
4	0.54 *	0.33 *	-0.06	0.524	0.893
5	0.41 *	0.31	-0.03	0.356	0.848
6	0.65 *	-0.12	0.08	0.407	0.890
COMSAFE: 1	0.12	0.74 *	0.00	0.632	0.849
2	0.11	0.75 *	-0.01	0.636	0.831
3	-0.12	0.75 *	0.17	0.597	0.826
4	-0.57 *	0.25	0.54 *	0.490	0.595
COMGWDP: 1	0.12	0.25	0.53 *	0.486	0.860
2	0.17	0.22	0.57 *	0.545	0.863
3	0.51 *	0.03	0.39 *	0.535	0.925
4	0.02	-0.49 *	0.73 *	0.565	0.433
Overall M.S.A. :					0.862
Variance explained by each factor:	2.50	1.96	1.66		
% variance explained :	31.49	24.69	20.91		
Cumulative % variance explained :	31.49	56.18	77.09		

The overall M.S.A. value of 0.862 was, according to Kaiser and Rice's (1974) categorisation, 'meritorious', and thus the use of factor analysis on these items was supported.

The factor correlation matrix for this solution is also reported, in table 11.9

Table 11.9

Factor Correlation Matrix:
'Managerial Commitment Variables'

	FACTOR 1	FACTOR 2	FACTOR 3
FACTOR 1	1.00	0.39	0.25
FACTOR 2	0.39	1.00	0.29
FACTOR 3	0.25	0.29	1.00

11.3.6.1 Discussion of the Factors Obtained

This analysis revealed an interpretable structure, but also indicated that the underlying dimensions were different from the original variables. Only two items ('COMFINP' item 2, and 'COMGOAL' item 1) were not loaded upon significantly by any factor.

The three factors within this structure were interpreted as indicated below:

- Factor one was labelled 'Managerial Encouragement to Achieve Work Targets'. The loadings by this factor, in decreasing order of magnitude, were upon 'COMFINP' item 1, 'COMGOAL' items 6, 3, and 2, 'COMSAFE' item 4, 'COMGOAL' items 4 and 5, and 'COMFINP' item 3. These loadings on items from different variables indicated that this factor had an underlying dimension which was different from any of the original variables. The heaviest loading was on 'COMFINP' item 1, which was 'My supervisor encourages me to work harder so that I will earn the profit-sharing bonus'. Five of the other items were from the 'COMGOAL' ('Perceived Extent of Managerial Commitment to Participation in Work-Target Setting') variable, the items for which can be found in appendix A-21. 'COMGOAL' item 6, for instance, was the second-heaviest loading by this factor, and was 'Work targets in my section have been mentioned by my superiors when considering me for pay rises'. Item 2 from the same variable was 'I have had assistance from my supervisor about problems relating to meeting work targets set for me'. 'COMSAFE' item 4 ('This company thinks that profits

are more important than discussing safety matters with staff') was also loaded upon heavily by this factor. This was plausible, because the item was aimed at measuring employees' perception of the relative importance management placed on safety versus achievement of work targets. There was therefore a clear indication that the underlying dimension of this factor related to the perceived encouragement provided by management to achieve work targets;

- Factor two was labelled 'Managerial Commitment to Participation in Safety-Related Decision-Making'. This was indicated by the three heaviest loadings by this factor, upon 'COMSAFE' items 1, 2 and 3. These items are contained in appendix A-22. 'COMGOAL' item 4 was loaded upon moderately (0.33) by this factor, but had also been loaded upon at a higher strength (0.54) by factor 1. It was accordingly decided not to interpret the loading of this factor on this item. 'COMGWDP' item 4 was 'Management on this mine are not really interested in the opinions of their employees about things that really matter'. Although this item was designed to measure respondents' perceptions of managerial commitment to participation generally, this loading is plausible when one considers that safety issues 'really matter' within the mining industry. There was thus a clear indication that the underlying dimension of this factor related to managerial commitment to participation in decisions relating to safety matters; and
- Factor three was labelled 'Managerial Commitment to Integrated Participative Management'. The loadings by this factor, in decreasing order of magnitude, were as follows: 'COMGWDP' items 4 and 2, 'COMSAFE' item 4, 'COMGWDP' item 1, 'COMFINP' item 3, and 'COMGWDP' item 3. These loadings, upon items from three different variables, indicated that they related to an underlying dimension of different meaning to any of the original variables. As all the 'COMGWDP' ('Perceived Extent of Managerial Commitment to Participation in General Work-Related Decision-Making') items had been loaded upon

by this factor, it appeared plausible that the dimension had a 'general' nature. The 'COMGWDP' items are to be found in appendix A-23. In addition to such 'general' items, however, items relating to specific forms of participation were also loaded upon by this factor. They were 'COMFINP' item 3 ('The mine's management are pleased when the employees earn a high bonus') and 'COMSAFE' item 4 ('This company thinks that profits are more important than discussing safety matters with staff'). Thus it was reasoned that this dimension was 'managerial commitment to integrated participative management', i.e. incorporating both financial- and decision-making participation.

These findings suggested that employees had not differentiated clearly between managerial commitment to different 'categories' of employee participation, as had initially been expected. A plausible interpretation of the factor structure had also indicated that the underlying dimensions all related to different perceptions of management's commitment to employee participation. The intercorrelation matrix, reported in table 11.9, reflected moderate correlations between the factors. This indicated that there was a modest association between the underlying dimensions. It was therefore reasoned that this structure of factor loadings warranted a consolidation of all these items into one combined variable. This step was also justified because the moderated multiple regression procedures would analyse the moderating effect of these variables on a grouped basis. There was therefore no need, in terms of the original research design, to retain the original variables in the study.

11.3.7 THE FACTOR STRUCTURE OF THE INSTRUMENTS MEASURING EMPLOYEE ATTITUDES TOWARDS PARTICIPATION AND WORK

This factor analysis procedure initially analysed 32 questionnaire items from the five measured 'attitudinal' dependent variables:

- 'FINSAT' ('Satisfaction with Financial Participation');
- 'GWDSAT' ('Satisfaction with Participation in Work-Related Decision-Making');
- 'JOBSAT' ('Job Satisfaction');
- 'ATTCOM' ('Organisational Commitment'); and
- 'PRSTAY' ('Propensity to Remain').

Five factors were extracted in the initial principal-factor procedure. Upon rotation, one common factor loaded upon the items for 'FINSAT', as expected. The items comprising 'JOBSAT' were loaded upon strongly by two different factors. However the five factors loaded inconsistently upon the items constituting 'GWDSAT', 'ATTCOM', and 'PRSTAY'.

In attempting to interpret these inconsistencies, it was reasoned that the items comprising the variable 'ATTCOM' ('Organisational Commitment') may have been expressing a generalised underlying dimension. However since this was not a variable of explanatory interest, it was removed from the factor analysis. Factors were noted to be loading jointly upon items from both the 'PRSTAY' ('Propensity to Remain') and 'JOBSAT' ('Job Satisfaction') variables. As the 'PRSTAY' variable was employed within this study as a surrogate for a behavioural outcome (actual employee turnover), it was also removed from this factor analysis. It was instead decided to include it within the factor analysis of the 'performance' outcome variables.

A further factor analysis was then undertaken on the remaining 'employee satisfaction' dependent variables of 'FINSAT', 'GWDSAT', and 'JOBSAT' only.

The intercorrelation matrix on these 19 items was initially scrutinised, to assess the degree of association between the scores on items measuring each variable. The intercorrelation matrix is contained in appendix C3-5. The highest correlation obtained was $r = 0.70$. Items were observed to generally correlate with other items from the same variables.

Three factors were extracted, using the 'proportion' criterion. Upon oblique rotation, the factor solution presented in table 11.10 was achieved. This table also reports Kaiser Measures of Sampling Adequacy for each item, as well as for the overall analysis.

The three interpretable factors obtained were labelled:

- Factor one: Satisfaction With the Job Itself;
- Factor two: Satisfaction With Financial Participation; and
- Factor three: Commitment to Perform the Job.

The overall M.S.A. value of 0.846 was, according to Kaiser and Rice's (1974) categorisation, 'meritorious'.

The factor correlation matrix for this solution is also reported, in table 11.11.

11.3.7.1 Discussion of the Factors Obtained

This analysis revealed an interpretable structure, consistent with two of the original variables ('JOBSAT' and 'FINSAT'). Items constituting the 'GWDSAT' ('Satisfaction with Participation in Work-Related Decision-Making') were not loaded upon consistently or heavily. Items 1 and 2 failed to be loaded upon above 0.33 by any factor, while item 3 was only loaded upon at a magnitude of 0.39 by factor two. It was reasoned that these items could be considered as describing the general underlying dimension of work-related decision-making satisfaction. Since this was not a variable of explanatory interest in the study, it was decided to consider it in the exploratory section only, and to qualify the findings in relation thereto in the light of its factor structure (see chapter 15).

Table 11.10

'Promax' Rotated Factor Structure:
'Satisfaction Variables'
(n = 525)

Variable /Item	Factor One	Factor Two	Factor Three	H2	M.S.A.
FINSAT: 1	-0.06	0.68 *	0.13	0.555	0.857
2	0.15	0.61 *	-0.12	0.482	0.883
3	-0.08	0.78 *	0.05	0.671	0.805
4	0.05	0.56 *	-0.09	0.359	0.831
5	-0.08	0.69 *	0.11	0.539	0.860
GWDSAT: 1	0.30	0.30	-0.16	0.257	0.832
2	-0.01	-0.02	-0.23	0.063	0.602
3	0.21	0.39 *	-0.09	0.266	0.863
JOBSAT: 1	0.66 *	0.05	-0.07	0.537	0.889
2	-0.02	-0.12	0.55 *	0.328	0.670
3	0.63 *	-0.07	0.01	0.459	0.864
4	0.03	0.10	0.61 *	0.469	0.826
5	0.04	-0.06	0.63 *	0.464	0.768
6	0.25	0.03	0.31	0.259	0.851
7	0.74 *	-0.04	0.01	0.661	0.892
8	-0.01	-0.01	0.65 *	0.467	0.736
9	0.69 *	0.01	0.11	0.666	0.883
10	0.73 *	0.04	0.07	0.724	0.864
11	0.33 *	0.14	0.24	0.338	0.846
Overall M.S.A.:					0.846
Variance explained by each factor:	2.76	2.53	1.81		
% variance explained :	32.25	29.56	21.14		
Cumulative % variance explained :	32.25	61.81	82.95		

Table 11.11

Factor Correlation Matrix:
'Satisfaction Variables'

	FACTOR 1	FACTOR 2	FACTOR 3
FACTOR 1	1.00	0.33	0.33
FACTOR 2	0.33	1.00	0.20
FACTOR 3	0.33	0.20	1.00

Only one other item, being 'JOBSAT' item 6, failed to be significantly loaded upon by any factor. The interpretation of this factor structure is now reported below:

- Factor one was labelled 'Satisfaction With The Job Itself'. All the factor loadings at levels above 0.33 were upon items from the 'JOBSAT' ('Job Satisfaction') instrument. The heaviest-loading was on item 7, which was 'I like my job better than most people like theirs'. The second-heaviest loading was on item 10, which was 'I feel real enjoyment in my job'. The 'JOBSAT' items are contained in appendix A-9. There was thus a clear indication that the underlying dimension of this factor related to employees' satisfaction with their jobs;
- Factor two was labelled 'Satisfaction with Financial Participation'. All the items from the 'FINSAT' variable (see appendix A-3) were loaded upon heavily and exclusively by this factor. The heaviest loading was on item 3: 'Because of the bonus scheme, I want to work harder'. The only item from another variable to be loaded upon by this factor was 'GWDSAT' item 3. This was 'My superiors listen to my ideas and suggestions'. This was plausible, as the 'GWDSAT' ('Satisfaction with Participation in Work-Related Decision-Making') items had failed to be loaded upon in any interpretable pattern, and there was a possible overlap between satisfaction with specific- and general-types of participatory management. There was therefore a clear indication that the underlying dimension of this factor was employee satisfaction with financial participation; and
- Factor three was labelled 'Commitment to Perform the Job'. All significant loadings by this factor were upon items from the 'JOBSAT' variable. In decreasing order of magnitude they were upon items 8, 5, 4 and 2. The heaviest-loading, upon item number 8, was scrutinised to obtain an indication of the nature of the dimension underlying this factor. The item was 'Basically, I don't like my job'. The second-heaviest loading was on item 5, which was 'I would like to change my job for another

one'. The third and fourth items were 'I would quit this job at once if I could' and 'I dislike my job'. Thus the common thread running through these items appeared to be a dimension of commitment (or lack thereof) towards performing the work. This was felt to be a plausible explanation of this factor, and clearly distinguishable from the 'Satisfaction With The Job Itself' dimension attributed to Factor one.

The intercorrelation matrix, reported in table 11.11, reflected only modest correlations between the factors. This indicated that while there may well have been a degree of overlap between the underlying dimensions, the questionnaire instruments had succeeded in measuring discrete variables as intended.

11.3.8 THE FACTOR STRUCTURE OF THE INSTRUMENTS MEASURING EMPLOYEE PERFORMANCE AND PROPENSITY TO REMAIN IN EMPLOYMENT

This factor analysis procedure analysed 15 questionnaire items from the 'performance' dependent variables:

- 'PRSTAY' ('Employees' Propensity to Remain'); and
- 'SELPERF' ('Employee Self-Rated Performance').

As discussed in section 11.3.7, the 'PRSTAY' items had originally been included within the factor analysis for the 'attitudinal' outcome variables. However this had produced a complex factor structure, and the decision was made to transfer the items to this analysis of 'performance' variables. This step was also justified because, within this study, the 'PRSTAY' variable was employed as a surrogate for a 'behavioural' variable: employees' actual decisions to resign.

The other 'performance' variable, which could not be included in this analysis, was 'SUPPERF' ('Employee Supervisor-Rated Performance'). As discussed in section 11.3.1, this was not possible because the measure was not 'questionnaire-generated', but was rather a single value extracted from the organisation's internal performance-evaluation system.

The intercorrelation matrix on these 15 items was initially scrutinised, to assess the degree of association between the scores on items measuring each variable. The intercorrelation matrix is contained in appendix C3-6. The highest correlation obtained was r = 0.58. Items were observed to generally correlate with other items from the same variables.

Two factors were extracted, using the 'proportion' criterion. Upon oblique rotation, the factor solution presented in table 11.12 was achieved. This table also reports Kaiser Measures of Sampling Adequacy for each item, as well as for the overall analysis.

The two interpretable factors obtained were labelled:
- Factor one: Employees' Self-Rated Performance; and
- Factor two: Propensity to Remain in Employment.

The overall M.S.A. value of 0.917 was, according to Kaiser and Rice's (1974) categorisation, 'excellent'.

The correlation between the two factors was r = 0.20. This low correlation supported the interpretation that the factor solution had produced two discrete factors.

11.3.8.1 Discussion of the Factors Obtained

This analysis revealed a clear and interpretable structure, consistent with the two original variables ('SELPERF' and 'PRSTAY'). All loadings were at magnitudes above 0.33, with factor one loading upon the ten 'SELPERF' ('Employees' Self-Rated Performance') items, and factor two loading upon the five 'PRSTAY' ('Propensity to Remain') items.

Table 11.12

'Promax' Rotated Factor Structure
'Performance Variables'
(n = 525)

Variable /Item		Factor One	Factor Two	H2	M.S.A.
SELPERF:	1	0.72 *	-0.05	0.245	0.934
	2	0.68 *	0.12	0.279	0.937
	3	0.71 *	-0.01	0.560	0.940
	4	0.75 *	0.13	0.227	0.923
	5	0.71 *	-0.08	0.398	0.950
	6	0.65 *	0.02	0.530	0.935
	7	0.67 *	0.02	0.529	0.949
	8	0.73 *	-0.09	0.521	0.940
	9	0.72 *	0.05	0.637	0.927
	10	0.68 *	-0.06	0.505	0.910
PRSTAY:	1	0.12	0.45 *	0.450	0.760
	2	0.03	0.52 *	0.470	0.600
	3	-0.06	0.74 *	0.535	0.658
	4	0.01	0.47 *	0.563	0.753
	5	0.01	0.62 *	0.463	0.771
Overall M.S.A.:					0.917
Variance explained by each factor:		5.11	1.80		
% variance explained	:	73.95	26.05		
Cumulative % variance explained	:	73.95	100.00		

The interpretation of this factor structure, in accordance with the original variables, will now be reported:

- Factor one was labelled 'Employees' Self-Rated Performance'. This factor loaded heavily and exclusively upon all the 'SELPERF' items (see appendix A-24). There was thus a clear indication that the underlying dimension of this factor related to employees' self-rated performance; and
- Factor two was labelled 'Propensity to Remain in Employment'. This factor loaded heavily and exclusively upon all the items from the 'PRSTAY' variable (see

appendix A-10). The heaviest loading was on item 3: 'It would be very hard for me to leave this employer even if I wanted to'. There was therefore a clear indication that the underlying dimension of this factor was an employee's propensity to remain in his current employment.

11.3.9 FACTOR ANALYSIS RESULTS: SUMMARY

The findings and decisions arising from the factor analyses reported above are summarised in tables 11.13 to 11.18:

- table 11.13 summarises the findings of the analyses undertaken on the independent variables measuring employees' perceived extent of participation. This factor analysis produced a solution consistent with the original variables, and no amendments thereto were deemed necessary;
- table 11.14 summarises the findings of the analyses undertaken on the moderator variables measuring employee personality constructs. This factor analysis also produced a solution consistent with the original constructs. No amendments were therefore made to the variables;
- table 11.15 summarises the findings of the analyses undertaken on the moderator variables measuring employee perceptions of the organisation's system of managerial communication and control. This produced a complex solution, and action was taken pursuant to the interpretation thereof. Items from the hypothesised constructs of 'PERCATT' ('Perceived Attainability of Work Targets') and 'PERCDIF' ('Perceived Difficulty of Work Targets') were loaded upon by different factors. It was therefore decided to consolidate these items into a new, combined construct: 'NPERCATT' ('Perceived Attainability of Employee Goals'). Items from the hypothesised constructs of 'PERCEVF' and 'PERCEVA' had also been loaded upon inconsistently. It was therefore decided to consolidate these items into a new, combined construct: 'NPERCEVF' ('Perceived Fairness of Supervisory Evaluation');

- table 11.16 summarises the findings of the analyses undertaken on the moderator variables measuring employee perceptions of managerial commitment to employee participation. An overlap of factor loadings was observed on items from all the 'managerial commitment to participation' constructs. It was felt that there was a common underlying dimension in that the items had all measured managerial commitment, to various types of participation on the mine. It was therefore decided to consolidate all these items into one consolidated variable: 'PERMCOP' ('Perception of Managerial Commitment to Integrated Employee Participation');
- table 11.17 summarises the findings of the analyses undertaken on the dependent variables measuring employee attitudes towards participation and work. Although two separate factors had loaded upon the 'JOBSAT' ('Job Satisfaction') items, this was plausibly interpreted. This analysis thus produced a clear factor structure, and no amendments to the variables was deemed necessary; and
- table 11.18 summarises the findings of the analyses undertaken on the dependent variables measuring employee performance and propensity to remain in employment. A very clear factor structure was obtained in this case, and no amendments to the variables were made.

For the exploratory path analytic section of the study, it was also decided to combine the behavioural outcome variables of 'SELPERF', 'SUPPERF' and 'PRSTAY' into one 'Consolidated Employee Performance' variable ('GRNPERF'). This was consistent with the approach of prior researchers such as Bateman and Organ (1983) and Organ (1977), who utilised broader measures of employee performance in their empirical studies.

Table 11.13

Summary of Factor Analysis Procedures

(A) Independent Variables

Variable	Variable Name	Factor Structure	Resulting Decision on Variable
PFNPAR	Perceived extent of financial participation	Clear loading: factor labelled 'Perceived extent of financial participation'	Retained in study
PPGOAL	Perceived extent of participation in work-target setting	Clear loading: factor labelled 'perceived extent of participation in work-target setting'	Retained in study
PPAGWD	Perceived extent of participation in general work-related decision-making	Clear loading: factor labelled 'perceived extent of participation in general work-related decision-making'	Retained in study
PPSAFE	Perceived extent of participation in safety-related decision-making	Inconsistent loading: interpreted as a generalist underlying factor	Retained in study

Table 11.14

Summary of Factor Analysis Procedures

(B) Personality Moderator Variables

Variable	Variable Name	Factor Structure	Resulting Decision on Variable
LOCCONT	Work locus of control	Clear loading: factor labelled 'work locus of control'	Retained in study
NEEDIND	Need for independence	Clear loading: factor labelled 'need for independence'	Retained in study
AUTHORM	Authoritarianism	Clear loading: factor labelled 'authoritarianism'	Retained in study

Table 11.15

Summary of Factor Analysis Procedures

(C) Managerial Control System Moderator Variables

Variable	Variable Name	Factor Structure	Resulting Decision on Variable
PERCATT	Perceived attainability of work targets	Inconsistent factor loadings Factors labelled: Ease of work target attainment;	New consolidated variable: 'NPERCATT' ('Perceived attainability of employee goals')
PERCDIF	Perceived difficulty of work targets		
PERCEVF	Perceived fairness of immediate supervisor's style of performance evaluation	Perceived attainability of work targets; & Perceived inability to attain work targets	New consolidated variable: 'NPERCEVF' ('Perceived fairness of supervisory evaluation')
PERCEVA	Perceived ambiguity of immediate supervisor's style of performance evaluation		
PEROLAP	Perceived extent of overlap of employee's assigned areas of responsibility and control	Clear loading: factor labelled 'perceived overlap between responsibilities and capabilities'	Retained in study
PERFEED	Perceived extent of feedback relating to employee's performance	Clear loading: factor labelled 'feedback on work performance'	Retained in study

Table 11.16

Summary of Factor Analysis Procedures

(D) Managerial Commitment Moderator Variables

Variable	Variable Name	Factor Structure	Resulting Decision on Variable
COMFINP	Perceived extent of managerial commitment to financial participation	Inconsistent factor loadings Factors labelled:	New consolidated variable: 'PERMCOP' ('Perception of managerial commitment to integrated employee participation')
COMGOAL	Perceived extent of managerial commitment to participation in work-target setting	Managerial encouragement to achieve work targets;	
COMSAFE	Perceived extent of managerial commitment to participation in safety-related decision-making	Managerial commitment to participation in safety-related decision-making;	
COMGWDP	Perceived extent of managerial commitment to participation in general work-related decision-making	Managerial commitment to integrated participative management	

Table 11.17

Summary of Factor Analysis Procedures

(E) Employee Attitudinal Dependent Variables

Variable	Variable Name	Factor Structure	Resulting Decision on Variable
FINSAT	Satisfaction with financial participation	Clear loading: factor labelled 'Satisfaction with financial participation'	Retained in study
GWDSAT	Satisfaction with participation in work-related decision-making	Inconsistent loading: no single factor identified	Retained in study (exploratory section only)
JOBSAT	Job satisfaction	Clear loadings: two factors, labelled 'satisfaction with the job itself'; and 'commitment to perform the job'	Retained in study
ATTCOM	Organisational commitment	Inconsistent loading: interpreted as a generalist underlying factor	Retained in study (exploratory section only)

Table 11.18

Summary of Factor Analysis Procedures

(F) Employee Behavioural Dependent Variables

Variable	Variable Name	Factor Structure	Resulting Decision on Variable
PRSTAY	Employees' propensity to remain (in employment)	Clear loading: factor labelled 'Propensity to remain in employment'	Retained in study
SELPERF	Employees' self-rated performance	Clear loading: factor labelled 'Self-rated performance'	Retained in study

11.4 CONCLUSION

This chapter reported the results of tests undertaken to assess the reliability and validity of the questionnaire instruments employed in the research study. The results were generally satisfactory, with acceptable levels of reliability and clear factor structures being obtained. Where factor loadings were inconsistent, new consolidated variables were created as indicated in section 11.3.9.

The following chapter will report on the explanatory statistical findings of the research, and on the results of testing the statistical hypotheses.

CHAPTER 12

THE RESULTS OF THE STATISTICAL ANALYSES AND THE TESTING OF THE HYPOTHESES

12.1 INTRODUCTION

The main objectives of this chapter are to present the statistical results of this study, and to outline the findings of the explanatory hypothesis-testing section of the research. In achieving these objectives, the following sub-objectives will be addressed in sequence:

- an overview of the general descriptive statistics will be provided, which will include an assessment of the normality of distribution of the test data;
- the intercorrelations between the measured variables will be reported, and arising therefrom the hypotheses of association will be tested and the results briefly interpreted; and
- the results of the moderated multiple regression procedures will be reported, and arising therefrom the hypotheses dealing with moderating effects will be tested and the results briefly interpreted.

The statistical findings reported in this chapter will only be interpreted briefly, but in sufficient detail to clarify their meaning.

12.2 DESCRIPTIVE STATISTICS

This section presents an overview of the general descriptive statistics obtained from the two main data-collection surveys. The statistics chosen to be included in the presentation, for each variable, were:

- the number of instrument items;
- the midrange score obtainable;
- the minimum score obtained;
- the maximum score obtained;
- the mean, standard deviation and median;
- the skewness and kurtosis measures; and

- the Cronbach Alpha reliability statistic.

The reasons for including these statistics were as follows:

- the number of instrument items, the midrange score, and the minimum and maximum scores obtained were key descriptive parameters of the measured variables;
- the mean, standard deviation and median were chosen because they provided information relating to the distribution of the data, the homogeneity of the samples and the amount of error variance in the data;
- the skewness and kurtosis measures were reported as these provided evidence regarding the normality of distribution of the data; and
- the Cronbach Alpha coefficients were reported as these indicated the reliability of the instruments used to measure the variables.

12.2.1 DESCRIPTIVE STATISTICS: FIRST SURVEY

The descriptive statistics arising from the first data-collection survey are contained in appendix B-1. The selected statistics are reported in respect of:

- the whole sample;
- the 'management' stratum;
- the 'supervisors and artisans' ('category A') stratum; and
- the 'unskilled and semi-skilled' ('category B') stratum.

In addition to the original response variables, a number of 'composite variables' were created, by summing the scores of other measured variables. This was done pursuant to the interpretation of the factor analysis results, reported in the previous chapter. The descriptive statistics for these 'composite variables' are reported at the end of appendix B-1; their content was described in section 11.3.9 of chapter 11.

12.2.2 DESCRIPTIVE STATISTICS: SECOND SURVEY

The descriptive statistics arising from the second data-collection survey are contained in appendix B-2. This appendix also includes the statistics for the 'composite variables',

described in section 11.3.9 of chapter 11. Appendix B-2 contains the same coverage as appendix B-1, with the exception of the 'SUPPERF' ('Employee Supervisor-Rated Performance') variable, which was not measured in the second survey.

12.2.3 ASSESSING THE NORMALITY OF DISTRIBUTION OF THE TEST DATA

Emory and Cooper (1991, p 530) stated that parametric tests placed different emphases on the importance of assumptions relating to the subject data. Some such tests were quite robust and would withstand violations. Other tests would suffer considerably under departures from linearity or normality, thus threatening the validity of the results. It was proposed in this study to employ a number of multivariate analyses, including regression and path analysis procedures. These are powerful parametric techniques, and can all be computed from an initial correlation matrix of the subject variables.

One of the main assumptions incorporated in such parametric techniques is the existence of a normal distribution for each of the variables being manipulated (Emory and Cooper, 1991 p 587). To assess the normality of distribution of the test data, the Shapiro-Wilk statistic, W, was computed for each variable (in respect of the entire sample and for each stratum). This procedure is detailed in the S.A.S. procedures guide, (1990 p 627). The Shapiro-Wilk statistics obtained are not reported here, but the results were mixed. While all but one (the exception being in respect of the 'SUPPERF' variable) of the Shapiro-Wilk statistics were large enough ($W > 0.90$) to accept the null hypothesis (that the input data values were a random sample from a normal distribution), the probabilities associated with these scores were mostly $p < 0.001$. This indicated that the null hypothesis was to be rejected, i.e. that the data did not come from a normal distribution.

This evidence of non-normality was further investigated by scrutinising the computed skewness and kurtosis statistics for each variable. These statistics are reported in appendices B-1

and B-2. All variables exhibited degrees of skewness and kurtosis, thus supporting the alternate hypothesis that the sample was not drawn from a normal distribution. Normality probability, box, and barchart plots were also printed for every variable. These were scrutinised to subjectively assess the severity of non-normality in the distributions. Varying degrees of non-normality were observed in the printouts, although it was felt that the extent thereof was relatively modest.

Grove and Savich (1979) recommended an approach for assessing the suitability of parametric tests in cases where the data was ordinal or distributed non-normally. They recommended a detailed comparison of the parametric and non-parametric correlation matrices, as previously reported in chapter 10.

The results of this detailed comparison were reported in section 10.9.2 of chapter 10, and will not be repeated here. As previously discussed, it was felt that the results substantially supported the decision to use parametric statistical techniques in this study. This was further supported by Murray (1993), who considered the mathematical basis for the use of parametric statistics in these circumstances.

12.3 RESULTS OF THE CORRELATIONAL ANALYSES AND THE TESTING OF HYPOTHESES 1 TO 5

This section presents the intercorrelations between the measured variables. Arising therefrom, the results of testing the hypotheses of association are reported and briefly interpreted.

12.3.1 FIRST SURVEY CORRELATIONS

Appendices C1 - 1 to 10 contain the detailed correlation matrix for the first data-collection survey. For each combination of variables, the following correlations are reported:

- the Pearson (parametric) correlation coefficient for the whole sample;

- the Spearman (non-parametric) correlation coefficient for the whole sample;
- the Pearson (parametric) correlation coefficients for the 'Management' sub-stratum;
- the Pearson (parametric) correlation coefficients for the 'Category A' (supervisors and artisans) sub-stratum; and
- the Pearson (parametric) correlation coefficients for the 'Category B' (unskilled and semi-skilled) sub-stratum.

Only correlations with significance of $p < 0.05$ are reported in the matrix. However, where correlations were obtained with significance of $0.05 < p < 0.10$, this is indicated by the notation '@ 0.10'.

12.3.2 SECOND SURVEY CORRELATIONS

Appendices C2 - 1 to 10 contain the detailed correlation matrix for the second data-collection survey. This matrix contains the same set of statistics as reported for the first survey, with the exception of correlations with the variable 'SUPPERF' ('Employee Supervisor-Rated Performance'). These are not reported because this variable was not measured in the second survey, for reasons stated earlier.

12.3.3 TESTING HYPOTHESES OF ASSOCIATION

The intercorrelations between the variables were used to test the hypotheses of association. The results of these tests will be reported in the following sections. In accordance with the decision taken to utilise parametric statistical techniques throughout this study, only the Pearson correlations were used for hypothesis-testing.

12.3.3.1 Hypothesis 1

This hypothesis, in scientific form, stated:
'There is a positive relationship between employees' job satisfaction and their perceived extent of financial participation.'

In statistical form the hypothesis stated:
'There is a significant association over time between scores obtained on a measure of employees' job satisfaction and scores obtained on a measure of their perceived extent of financial participation.'

The null hypothesis (Ho) stated that there was no such association (zero correlation), or that the significance of the correlation was so small that it could be accounted for by chance.

The intercorrelations used to test this hypothesis are reported in table 12.1.

Table 12.1

Correlations Between Scores of:
Job Satisfaction ('JOBSAT') and
Perceived Extent of Financial Participation ('PFNPAR')

(Survey:)	PFNPAR (First) (n = 525)	PFNPAR (Second) (n = 234)
JOBSAT	0.30283 **	0.34628 **
** = p < 0.001		

These results indicated that a positive association existed, at both points in time, between employees' job satisfaction and their perceived extent of financial participation. The null hypothesis (Ho) could not, therefore, be supported in this instance. Accordingly the alternate hypothesis was supported.

12.3.3.2 Hypothesis 2

This hypothesis, in scientific form, stated:
'There is a positive relationship between employees' job satisfaction and their perceived extent of participation in general work-related decision-making.'

In statistical form, the hypothesis stated:
'There is a significant association over time between scores obtained on a measure of employees' job satisfaction and scores obtained on a measure of their perceived extent of participation in general work-related decision-making.'

The null hypothesis (Ho) stated that there was no such association (zero correlation), or that the significance of the correlation was so small that it could be accounted for by chance.

The intercorrelations used to test this hypothesis are reported in table 12.2.

Table 12.2

Correlations Between Scores of:
Job Satisfaction ('JOBSAT') and
Perceived Extent of Participation in General Work-Related Decision-making ('PPAGWD')

(Survey:)	PPAGWD (First) (n = 525)	PPAGWD (Second) (n = 234)
JOBSAT	0.38011 **	0.33753 **
** = p < 0.001		

These results indicated that a positive association existed, at both points in time, between employees' job satisfaction and their perceived extent of participation in general work-related decision-making. The null hypothesis (Ho) could not, therefore, be supported in this instance. Accordingly the alternate hypothesis was supported.

12.3.3.3 Hypothesis 3

This hypothesis, in scientific form, stated:
'There is a positive relationship between employees' job satisfaction and their perceived extent of participation in specific types of work-related decision-making.'

In statistical form, the hypothesis stated:
'There are significant associations over time between scores obtained on a measure of employees' job satisfaction and scores obtained on measures of their perceived extent of participation in:

(a) work target setting; and

(b) decision-making relating to safety issues.'

The null hypothesis (Ho) stated that there were no such associations (zero correlations), or that the significances of the correlations were so small that they could be accounted for by chance.

The intercorrelations used to test this hypothesis are reported in table 12.3.

Table 12.3

Correlations Between Scores of:
Job Satisfaction ('JOBSAT'), and
Perceived Extent of Participation in Work Target Setting ('PPGOAL') and
Perceived Extent of Participation in Safety-Related Decision-making ('PPSAFE')

(Survey:)	PPGOAL (First) (n = 525)	PPGOAL (Second) (n = 234)	PPSAFE (First) (n = 525)	PPSAFE (Second) (n = 234)
JOBSAT	0.30078 **	0.40203 **	0.27771 **	0.33140 **

** = p < 0.001

These results indicated that a positive association existed, at both points in time, between employees' job satisfaction and their perceived extent of participation in work-target setting. They also indicated that a positive association existed, at both points in time, between employees' job satisfaction and their perceived extent of participation in safety-related decision-making. The null hypothesis (Ho) could not, therefore, be supported in this instance. Accordingly the alternate hypothesis was supported.

12.3.3.4 Hypothesis 4

This hypothesis, in scientific form, stated:
'There is a positive relationship between employees' job satisfaction and their performance.'

In statistical form, the hypothesis stated:
'There is a significant association over time between scores obtained on a measure of employees' job satisfaction and scores obtained on a measure of their performance.'

The null hypothesis (Ho) stated that there was no such association (zero correlation), or that the significance of the correlation was so small that it could be accounted for by chance.

The intercorrelations used to test this hypothesis are reported in table 12.4.

Table 12.4

Correlations between Scores of:
Job Satisfaction ('JOBSAT'), and
Employee Self-Rated Performance ('SELPERF') and
Employee Supervisor-Rated Performance ('SUPPERF')

(Survey:)	SELPERF (First) (n = 525)	SELPERF (Second) (n = 234)	SUPPERF (First) (n = 525)
JOBSAT	0.19637 **	0.23666 **	0.12063 #

** = p < 0.001
# = p < 0.05

These results indicated that positive associations existed, at both points in time, between employees' job satisfaction and their performance, whether self-rated or supervisor-rated. Although the correlations were statistically significant ($p < 0.05$), they were not substantial. However this was consistent with the findings of prior researchers, as discussed in chapter 6.

As previously noted, the supervisor-rated performance scores were not included in the second, confirmatory, study. It was noted, however, that the size of the correlation between 'JOBSAT' and 'SUPPERF', obtained from the first study, was only r = 0.12063. Although this correlation was also statistically significant ($p < 0.05$), it was regarded as only modest in size, and therefore tentative.

Nevertheless, all the hypothesised associations were statistically valid at the 95 percent level of significance. The null hypothesis (Ho) could not, therefore, be supported in this instance. Accordingly the alternate hypothesis was supported.

12.3.3.5 Hypothesis 5

This hypothesis, in scientific form, stated:
'There is a positive relationship between employees' job satisfaction and their stability.'

In statistical form, the hypothesis stated:
'There is a significant association over time between scores obtained on a measure of employees' job satisfaction and scores obtained on a measure of their stability.'

The null hypothesis (Ho) stated that there was no such association (zero correlation), or that the significance of the correlation was so small that it could be accounted for by chance.

The intercorrelations used to test this hypothesis are reported in table 12.5.

Table 12.5

Correlations Between Scores of:
Job Satisfaction ('JOBSAT') and
Propensity to Remain ('PRSTAY')

(Survey:)	PRSTAY (First) (n = 525)	PRSTAY (Second) (n = 234)
JOBSAT	0.39722 **	0.35928 **

** = p < 0.001

These results indicated that a positive association existed, at both points in time, between employees' job satisfaction and their propensity to remain, which as previously discussed, was the selected surrogate measure for employees' actual levels of stability.

The null hypothesis (Ho) could not, therefore, be supported in this instance. Accordingly the alternate hypothesis was supported.

12.3.3.6 Summary and Conclusion

The results of testing the hypotheses of association, as reported above, were strongly supportive of major elements of the 'Model of Integrated Employee Participation (incorporating moderating effects)' described in chapter 8:

- hypothesis 1 was supported, suggesting that a positive relationship exists between employees' job satisfaction and their perceived extent of financial participation;
- hypothesis 2 was supported, suggesting that a positive relationship exists between employees' job satisfaction and their perceived extent of participation in general work-related decision-making;
- hypothesis 3 was supported, suggesting that a positive relationship exists between employees' job satisfaction and their perceived extent of participation in specific types of work-related decision-making;

- hypothesis 4 was supported, suggesting that a positive relationship exists between employees' job satisfaction and their performance; and
- hypothesis 5 was supported, suggesting that a positive relationship exists between employees' job satisfaction and their stability.

These hypotheses were also supported longitudinally, i.e. at both points in time. This provided greater support for the existence of these associations.

To complete the reporting of the hypothesis-testing part of the research, the next section will report on the results of testing the hypotheses of moderating effects.

12.4 RESULTS OF THE MODERATED MULTIPLE REGRESSION ANALYSES AND THE TESTING OF HYPOTHESES 6 TO 11

This section presents the results of the various moderated multiple regression analyses performed in the study. Arising therefrom, the results of testing the hypotheses relating to moderating effects will be reported and briefly interpreted. Each regression analysis followed the procedure outlined, in detail, in section 10.9.6 of chapter 10. Thus in each analysis variables were added to, and removed from, the regression equation, in a stepwise manner, in the following sequence:

- the biographical variables 'marriage status', 'age', 'home language', 'education level', 'work site', 'attendance at company orientation course', 'tenure' and 'level in the hierarchy' were initially introduced as independent variables. The purpose of this step was to control for the effects of these items on the dependent variable throughout the analysis;
- in the second step, the independent variable was introduced, and the regression recalculated. This produced the initial coefficient of determination ('r-squared') of the analysis (i.e. prior to the assessment of the moderation effects);
- the personality moderator variables ('LOCCONT', 'NEEDIND' and 'AUTHORM') were then introduced into the regression.

Following the example set by French and Rosenstein (1984), these moderator variables were introduced as a combined set. This approach was also advocated by Cohen and Cohen (1983, p 307) as a means of studying the moderating effects of a functional class of research factors. The resultant coefficient of determination, 'r (linear)' indicated the proportion of the variance accounted for by the predictor variables that had been introduced up to this stage of the analysis;

- the 'interaction terms' for the 'personality moderators' were then introduced into the regression, also as a combined set. Each 'interaction term' was computed as the product of the respective 'personality' variable score and the independent variable score for each respondent. The regression was then recalculated, and the resultant coefficient of determination, 'r (moderated)', was computed. The moderating effect of this set of personality variables on the relationship between the independent variable and the dependent variable was computed by subtracting the 'r (linear)' figure from the 'r (moderated)' number (as described by Searfoss and Monczka, 1973 p 547);
- the 'personality' variables and their 'interaction terms' were then removed from the regression;
- the 'managerial control system variables' ('NPERCATT', 'NPERCEVF', 'PEROLAP' and 'PERFEED') were introduced as a new set of moderator variables, the regression was recalculated, and the 'r (linear)' for this category of moderator variables was computed;
- the 'managerial control system' interaction terms were introduced as a group, the regression was recalculated, and the new 'r (moderated)' was computed. The moderating effect for this category of variables was then calculated by subtracting the new 'r (linear)' figure from the new 'r (moderated)' number;
- the 'managerial control system' variables and their 'interaction terms' were then removed from the regression;

- the consolidated 'managerial commitment' variable ('PERMCOP') was introduced as a final moderator variable, the regression was recalculated, and the 'r (linear)' for this variable was computed; and
- the 'managerial commitment' interaction term was introduced, the regression was recalculated, and the new 'r (moderated)' was computed. Finally, the moderating effect of this variable was computed by subtracting the final 'r (linear)' figure from this 'r (moderated)' number.

The results of the moderated multiple regression procedures, incorporating the 'grouped' moderator effects, will be reported in the following sub-sections.

12.4.1 FIRST SURVEY RESULTS

The results of the moderated multiple regression procedures undertaken on the data arising from the first survey are reported, in detail, in appendix D. Each report provides the following information in respect of the regressions performed at each step of the procedure:

- the coefficient of determination;
- the change in the coefficient of determination from that computed before the introduction of the latest predictor variable/s;
- the 'F-Value', used to test the null hypothesis that the parameters of the regression solution were not significantly different from zero;
- the resulting significance of the overall regression;
- the 'beta' partial regression coefficients and the standard errors, for each predictor variable inserted into the regression equation; and
- the statistical level of significance of the 'beta' for each predictor variable.

12.4.2 SECOND SURVEY RESULTS

The results of the moderated multiple regression procedures undertaken on the data from the second survey are also reported in appendix D. As the second study was performed for

confirmatory reasons, only the following details are reported in respect of these regressions:

- the coefficient of determination;
- the change in the coefficient of determination from that computed before the introduction of the latest predictor variable/s; and
- the resulting significance of the overall regression.

Further, supervisor-rated employee performance ('SUPPERF') was not measured in the second survey. Therefore the multiple regression analyses incorporating this dependent variable could not be performed and are not reported.

12.4.3 TESTING HYPOTHESES OF MODERATING EFFECTS

The results of the moderated multiple regression analyses were used to test the hypotheses of moderation. The results of these tests will be reported in the following sections.

Throughout these tests, a significant moderating effect was considered to be one where:

- the difference between the coefficients of determination 'r (linear)' and 'r (moderated)' was at least 0.01; and
- the 'F-value' for the interaction terms in the final regression equation indicated that their betas were non-zero ($p < 0.05$). This test, as confirmed by Gujarati (1992, p 200), simultaneously verified the significance of the change in 'r-squared' arising from the introduction of the interaction terms.

These criteria for defining significance were consistent with those applied in prior moderated multiple regression analyses (e.g. Staw and Oldham, 1978; French and Rosenstein, 1984; Nunns and Argirys, 1992). The results of the tests for significance of each moderating effect are also reported within the reports in appendix D.

12.4.3.1 Hypothesis 6

This hypothesis, in scientific form, stated:
'Personality factors moderate relationships between employees' perceived extent of participation, job satisfaction and performance.'

In statistical form, the hypothesis stated:
'Scores on measures of employees' work locus of control, need for independence, and authoritarianism exert a combined moderating effect on the majority of associations between scores obtained on measures of employees' job satisfaction, perceived financial and decision-making participation, and performance and stability.'

The null hypothesis (Ho) stated that on the majority of these associations there were no such moderating effects, or that the moderating effects were so small (not significant) that they could be accounted for by chance.

The changes in coefficients of determination used to test this hypothesis are reported in table 12.6.

Table 12.6

Moderating Effects: 'Personality Variables'

APPENDIX	INDEPENDENT VARIABLE	DEPENDENT VARIABLE	CHANGE IN R-SQUARED (1st Study) (n = 525)	CHANGE IN R-SQUARED (2nd Study) (n = 234)
D - 1	PFNPAR	JOBSAT	0.002	0.002
D - 2	PPGOAL	JOBSAT	0.011 @	0.010
D - 3	PPSAFE	JOBSAT	0.007	0.007
D - 4	PPAGWD	JOBSAT	0.009 @	0.009
D - 5	JOBSAT	SELPERF	0.005	0.012
D - 6	JOBSAT	SUPPERF	0.005	(N/A)
D - 7	JOBSAT	PRSTAY	0.011 @	0.027 @

@ = p < 0.10

Table 12.6 reflects, that in respect of the moderating effects of the personality variables:

- none of the seven moderated regression analyses on the data from the first survey produced a significant moderating effect; and
- none of the six analyses undertaken on the data from the second survey produced a significant moderating effect.

These results indicated that the majority of associations between job satisfaction, financial and decision-making participation, performance and stability were not significantly moderated by the combined group of measured 'personality factors'.

The null hypothesis (Ho) was therefore supported in this instance. Accordingly the alternate hypothesis could not be supported.

12.4.3.2 Hypothesis 7

This hypothesis, in scientific form, stated:
'Employees' perceptions of aspects of the system of managerial communication and control moderate the relationships between their perceived extent of participation, job satisfaction and performance.'

In statistical form, the hypothesis stated:
'Scores on measures of employees' perceptions of the attainability of their work targets, the fairness of their supervisor's evaluation style, and the overlap of their assigned areas of responsibility and control exert a combined moderating effect on the majority of associations between scores obtained on measures of employees' job satisfaction, perceived financial and decision-making participation, and performance and stability.'

The null hypothesis (Ho) stated that on the majority of these associations there were no such moderating effects, or that the moderating effects were so small (not significant) that they could be accounted for by chance.

The changes in coefficients of determination used to test this hypothesis are reported in table 12.7.

Table 12.7

Moderating Effects: 'Managerial Control System Variables'

APPENDIX	INDEPENDENT VARIABLE	DEPENDENT VARIABLE	CHANGE IN R-SQUARED (1st Study) (n = 525)	CHANGE IN R-SQUARED (2nd Study) (n = 234)
D - 1	PFNPAR	JOBSAT	0.013 #	0.027 #
D - 2	PPGOAL	JOBSAT	0.018 #	0.015
D - 3	PPSAFE	JOBSAT	0.026 **	0.027 #
D - 4	PPAGWD	JOBSAT	0.017 #	0.019
D - 5	JOBSAT	SELPERF	0.023 *	0.015
D - 6	JOBSAT	SUPPERF	0.008	(N/A)
D - 7	JOBSAT	PRSTAY	0.012 @	0.009

** = p < 0.001
* = p < 0.01
# = p < 0.05
@ = p < 0.10

Table 12.7 reflects, in respect of the moderating effects of the managerial control system variables:

- of the seven moderated regression analyses on the data from the first survey, five produced a significant moderating effect; and
- of the six analyses undertaken on the data from the second survey, two produced a significant moderating effect.

These results indicated that in the first survey the majority of associations between job satisfaction, financial and decision-making participation, performance and stability were significantly moderated by the 'managerial control system variables'. However this was not the case in the second survey.

The null hypothesis (Ho) could not, therefore, be supported in the first survey, but was supported in the second survey. Accordingly the alternate hypothesis was supported in the

first survey, but could not be supported in the second survey.

12.4.3.3 Hypothesis 8

This hypothesis, in scientific form, stated:
'Employees' perceptions of managerial commitment to participation moderate the relationships between their perceived extent of participation, job satisfaction and performance.'

In statistical form, the hypothesis stated:
'Scores on measures of employees' perceptions of management's commitment to participation exert a combined moderating effect on the majority of associations between scores obtained on measures of employees' job satisfaction, perceived financial and decision-making participation, and performance and stability.'

The null hypothesis (Ho) stated that on the majority of these associations there were no such moderating effects, or that the moderating effects were so small (not significant) that they could be accounted for by chance.

The changes in coefficients of determination used to test this hypothesis are reported in table 12.8.

Table 12.8

Moderating Effects: 'Managerial Commitment Variable'

APPENDIX	INDEPENDENT VARIABLE	DEPENDENT VARIABLE	CHANGE IN R-SQUARED (1st Study) (n = 525)	CHANGE IN R-SQUARED (2nd Study) (n = 234)
D - 1	PFNPAR	JOBSAT	0.000	0.000
D - 2	PPGOAL	JOBSAT	0.005 @	0.002
D - 3	PPSAFE	JOBSAT	0.006 #	0.000
D - 4	PPAGWD	JOBSAT	0.002	0.004
D - 5	JOBSAT	SELPERF	0.006 @	0.000
D - 6	JOBSAT	SUPPERF	0.001	(N/A)
D - 7	JOBSAT	PRSTAY	0.000	0.002

= p < 0.05
@ = p < 0.10

Table 12.8 reflects, in respect of the moderating effects of the managerial commitment variable:

- of the seven moderated regression analyses on the data from the first survey, none produced a significant moderating effect; and
- of the six analyses undertaken on the data from the second survey, none produced a significant moderating effect.

These results indicated that the majority of associations between job satisfaction, financial and decision-making participation, performance and stability were not significantly moderated by the 'managerial commitment' variable.

The null hypothesis (Ho) was therefore supported in this instance. Accordingly the alternate hypothesis could not be supported.

12.4.3.4 Hypothesis 9

This hypothesis, in scientific form, stated:
'Most moderating effects on the relationships between participation, worker attitudes and performance are work-level specific.'

In statistical form, the hypothesis stated:
'The majority of measured moderating effects on associations between scores obtained on measures of employees' job satisfaction, perceived financial and decision-making participation, performance and stability are work-level specific.'

The null hypothesis (Ho) stated that the majority of these moderating effects were not work-level specific, or that the differences in the majority of moderating effects between work-levels were so small (not significant) that they could be accounted for by chance.

The changes in coefficients of determination used to test this hypothesis are reported in tables 12.9(a), (b), and (c). Each table reports on the measured moderating effects of a separate category of variables:

- table 12.9(a) reports on the 'grouped' moderating effects of the 'personality' set of variables ('LOCCONT', 'NEEDIND' and 'AUTHORM') for respondents working at each level of the hierarchy;
- table 12.9(b) reports on the 'grouped' moderating effects of the 'managerial control system' set of variables ('NPERCATT', 'NPERCEVF', 'PEROLAP', and 'PERFEED') for respondents working at each level of the hierarchy; and
- table 12.9(c) reports on the moderating effect of the 'managerial commitment' variable ('PERMCOP') for respondents working at each level of the hierarchy.

For each regression, the 'grouped' moderating effects were compared across the three levels of the hierarchy. The results of each comparison determined whether or not the moderating effect concerned was work-level specific.

For purposes of testing this hypothesis, a moderating effect was deemed to be work-level specific when:

- at least one of the moderating effects (i.e. at Management, Category A or Category B level) was significant, as previously defined in section 12.4.3; and
- at least one of the moderating effects at the remaining work levels was not significant.

A moderating effect was deemed not to be work-level specific when all the moderating effects (i.e. at Management, Category A and Category B levels) were significant, as previously defined.

In cases where none of the moderating effects (i.e. at Management, Category A and Category B levels) were significant, as previously defined, the notation '(N/M)' is inserted in the respective table, indicating that there was no

moderating effect at any of the three levels of the hierarchy, for that particular group of variables.

Table 12.9(a) reflects that of the 13 potential moderating effects by the group of 'personality' variables, 8 were found not to exist, or alternatively to be statistically insignificant, at all levels of the hierarchy. All of the 5 moderating effects identified were found, however, to be work-level specific, i.e. they were not consistently significant across all three levels.

Table 12.9(b) reflects that of the 13 potential moderating effects by the group of 'managerial control system' variables, 3 were found not to exist, or alternatively to be statistically insignificant, at all levels of the hierarchy. All of the 10 moderating effects identified were found, however, to be work-level specific, i.e. they were not consistently significant across all three levels.

Table 12.9(c) reflects that of the 13 potential moderating effects by the 'managerial commitment' variable, 10 were found not to exist, or alternatively to be statistically insignificant, at all levels of the hierarchy. All of the 3 moderating effects identified were found, however, to be work-level specific, i.e. they were not consistently significant across all three levels.

Table 12.9(a)

Moderating Effects: By Work-Level
Moderators: Personality Variables

APP.	LEVEL	INDEPENDENT VARIABLE	DEPENDENT VARIABLE	CHANGE IN R-SQUARED (1st Study)	CHANGE IN R-SQUARED (2nd Study)
D-1A	Management	PFNPAR	JOBSAT	0.041	0.157 #
D-1B	Category A	PFNPAR	JOBSAT	0.044	0.041
D-1C	Category B	PFNPAR	JOBSAT	0.001	0.004
(Effect work-level specific:)				(N/M)	(Yes)
D-2A	Management	PPGOAL	JOBSAT	0.007	0.020
D-2B	Category A	PPGOAL	JOBSAT	0.107 #	0.063
D-2C	Category B	PPGOAL	JOBSAT	0.016 @	0.016
(Effect work-level specific:)				(Yes)	(N/M)
D-3A	Management	PPSAFE	JOBSAT	0.032	0.026
D-3B	Category A	PPSAFE	JOBSAT	0.142 #	0.012
D-3C	Category B	PPSAFE	JOBSAT	0.013	0.014
(Effect work-level specific:)				(Yes)	(N/M)
D-4A	Management	PPAGWD	JOBSAT	0.102 @	0.024
D-4B	Category A	PPAGWD	JOBSAT	0.026	0.071
D-4C	Category B	PPAGWD	JOBSAT	0.016 #	0.010
(Effect work-level specific:)				(Yes)	(N/M)
D-5A	Management	JOBSAT	SELPERF	0.042	0.034
D-5B	Category A	JOBSAT	SELPERF	0.063	0.062
D-5C	Category B	JOBSAT	SELPERF	0.005	0.012
(Effect work-level specific:)				(N/M)	(N/M)
D-6A	Management	JOBSAT	SUPPERF	0.039	(N/A)
D-6B	Category A	JOBSAT	SUPPERF	0.033	(N/A)
D-6C	Category B	JOBSAT	SUPPERF	0.008	(N/A)
(Effect work-level specific:)				(N/M)	(N/A)
D-7A	Management	JOBSAT	PRSTAY	0.044	0.053 @
D-7B	Category A	JOBSAT	PRSTAY	0.025	0.103
D-7C	Category B	JOBSAT	PRSTAY	0.016 #	0.042 @
(Effect work-level specific:)				(Yes)	(N/M)

= p < 0.05
@ = p < 0.10

Summary, number of:		
- no moderating effects :	3	5
- work-level specific effects :	4	1
- effects not work-level specific :	0	0

Table 12.9(b)

Moderating Effects: By Work-Level
Moderators: Managerial Control System Variables

APP.	LEVEL	INDEPENDENT VARIABLE	DEPENDENT VARIABLE	CHANGE IN R-SQUARED (1st Study)	CHANGE IN R-SQUARED (2nd Study)
D-1A	Management	PFNPAR	JOBSAT	0.033	0.057
D-1B	Category A	PFNPAR	JOBSAT	0.114 #	0.008
D-1C	Category B	PFNPAR	JOBSAT	0.016 @	0.047 #
(Effect work-level specific:)				(Yes)	(Yes)
D-2A	Management	PPGOAL	JOBSAT	0.044	0.003
D-2B	Category A	PPGOAL	JOBSAT	0.054	0.012
D-2C	Category B	PPGOAL	JOBSAT	0.022 #	0.055 #
(Effect work-level specific:)				(Yes)	(Yes)
D-3A	Management	PPSAFE	JOBSAT	0.010	0.020
D-3B	Category A	PPSAFE	JOBSAT	0.047	0.014
D-3C	Category B	PPSAFE	JOBSAT	0.039 **	0.076 *
(Effect work-level specific:)				(Yes)	(Yes)
D-4A	Management	PPAGWD	JOBSAT	0.049	0.027
D-4B	Category A	PPAGWD	JOBSAT	0.036	0.093
D-4C	Category B	PPAGWD	JOBSAT	0.026 *	0.028
(Effect work-level specific:)				(Yes)	(N/M)
D-5A	Management	JOBSAT	SELPERF	0.071	0.062
D-5B	Category A	JOBSAT	SELPERF	0.022	0.193 @
D-5C	Category B	JOBSAT	SELPERF	0.036 *	0.040
(Effect work-level specific:)				(Yes)	(N/M)
D-6A	Management	JOBSAT	SUPPERF	0.089	(N/A)
D-6B	Category A	JOBSAT	SUPPERF	0.049	(N/A)
D-6C	Category B	JOBSAT	SUPPERF	0.008	(N/A)
(Effect work-level specific:)				(N/M)	(N/A)
D-7A	Management	JOBSAT	PRSTAY	0.123	0.077 #
D-7B	Category A	JOBSAT	PRSTAY	0.018	0.120
D-7C	Category B	JOBSAT	PRSTAY	0.018 #	0.028
(Effect work-level specific:)				(Yes)	(Yes)

** = p < 0.001
* = p < 0.01
# = p < 0.05
@ = p < 0.10

Summary, number of:		
- no moderating effects :	1	2
- work-level specific effects :	6	4
- effects not work-level specific :	0	0

Table 12.9(c)

Moderating Effects: By Work-Level
Moderator: Managerial Commitment ('PERMCOP')

APP.	LEVEL	INDEPENDENT VARIABLE	DEPENDENT VARIABLE	CHANGE IN R-SQUARED (1st Study)	CHANGE IN R-SQUARED (2nd Study)
D-1A	Management	PFNPAR	JOBSAT	0.011	0.001
D-1B	Category A	PFNPAR	JOBSAT	0.041 @	0.002
D-1C	Category B	PFNPAR	JOBSAT	0.001	0.000
(Effect work-level specific:)				(N/M)	(N/M)
D-2A	Management	PPGOAL	JOBSAT	0.059 #	0.021
D-2B	Category A	PPGOAL	JOBSAT	0.004	0.000
D-2C	Category B	PPGOAL	JOBSAT	0.010 #	0.002
(Effect work-level specific:)				(Yes)	(N/M)
D-3A	Management	PPSAFE	JOBSAT	0.053 @	0.006
D-3B	Category A	PPSAFE	JOBSAT	0.001	0.002
D-3C	Category B	PPSAFE	JOBSAT	0.011 #	0.001
(Effect work-level specific:)				(Yes)	(N/M)
D-4A	Management	PPAGWD	JOBSAT	0.044 @	0.002
D-4B	Category A	PPAGWD	JOBSAT	0.023	0.001
D-4C	Category B	PPAGWD	JOBSAT	0.006 @	0.004
(Effect work-level specific:)				(N/M)	(N/M)
D-5A	Management	JOBSAT	SELPERF	0.021	0.000
D-5B	Category A	JOBSAT	SELPERF	0.000	0.117 #
D-5C	Category B	JOBSAT	SELPERF	0.007 @	0.009
(Effect work-level specific:)				(N/M)	(Yes)
D-6A	Management	JOBSAT	SUPPERF	0.001	(N/A)
D-6B	Category A	JOBSAT	SUPPERF	0.006	(N/A)
D-6C	Category B	JOBSAT	SUPPERF	0.000	(N/A)
(Effect work-level specific:)				(N/M)	(N/A)
D-7A	Management	JOBSAT	PRSTAY	0.021	0.001
D-7B	Category A	JOBSAT	PRSTAY	0.002	0.045
D-7C	Category B	JOBSAT	PRSTAY	0.000	0.000
(Effect work-level specific:)				(N/M)	(N/M)

= p < 0.05
@ = p < 0.10

Summary, number of:		
- no moderating effects :	5	5
- work-level specific effects :	2	1
- effects not work-level specific :	0	0

The moderating effects reported in tables 12.9(a), (b) and (c) are summarised in table 12.9(d).

Table 12.9(d)

Summary of Moderating Effects: By Work-Level

CATEGORY OF MODERATOR VARIABLES	NO MODERATING EFFECT	WORK-LEVEL SPECIFIC EFFECTS	EFFECTS NOT WORK-LEVEL SPECIFIC
First Survey:			
Personality	3	4	0
Managerial Control System	1	6	0
Managerial Commitment	5	2	0
Totals, First Survey :	9	12	0
Second Survey:			
Personality	5	1	0
Managerial Control System	2	4	0
Managerial Commitment	5	1	0
Totals, Second Survey :	12	6	0

Table 12.9(d) reflects that:

- of the 21 moderated regression analyses undertaken across the three levels of the hierarchy in the first survey, 9 did not produce significant moderating effects at any level. All the remaining 12 moderating effects were found to be work-level specific, i.e. they were not consistently significant at all three levels; and
- 12 of the 18 moderated regression analyses undertaken on the data from the second survey failed to produce significant moderating effects at any level. All the remaining 6 moderating effects were found to be work-level specific.

These results indicated that the majority of the significant moderating effects were work-level specific. The null hypothesis (Ho) could not, therefore, be supported in this instance. Accordingly the alternate hypothesis was supported.

12.4.3.5 Hypothesis 10

This hypothesis, in scientific form, stated:
'Most moderating effects on the relationships between participation, worker attitudes and performance are situation specific.'

In statistical form, the hypothesis stated:
'The majority of measured moderating effects on associations between scores obtained on measures of employees' job satisfaction, perceived financial and decision-making participation, performance and stability are situation specific.'

The null hypothesis (Ho) stated that the majority of these moderating effects were not situation specific, or that the differences in the majority of moderating effects between work situations were so small (not significant) that they could be accounted for by chance.

The changes in coefficients of determination used to test this hypothesis are reported in tables 12.10(a), (b) and (c). Each table reports on the measured moderating effects of a separate category of variables:

- table 12.10(a) reports on the 'grouped' moderating effects of the 'personality' set of variables ('LOCCONT', 'NEEDIND' and 'AUTHORM') for respondents working above- or below-ground;
- table 12.10(b) reports on the 'grouped' moderating effects of the 'managerial control system' set of variables ('NPERCATT', 'NPERCEVF', 'PEROLAP', and 'PERFEED') for respondents working above- or below-ground; and
- table 12.10(c) reports on the moderating effect of the 'managerial commitment' variable ('PERMCOP') for respondents working above- or below-ground.

For each regression, the 'grouped' moderating effects were compared between the two 'work sites' of above- and below-

ground. The results of each comparison determined whether or not the moderating effect concerned was work-site specific.

For purposes of testing this hypothesis, a moderating effect was deemed to be work-site specific when:

- at least one of the measured moderating effects (i.e. for respondents working either above- or below-ground) was significant, as previously defined in section 12.4.3; and
- the moderating effect for employees working at the other work-site was not significant.

A moderating effect was deemed not to be work-site specific when both measured moderating effects (i.e. for respondents working both above- and below-ground) were significant.

In cases where neither of the moderating effects (i.e. for respondents working above- or below-ground) were significant, the notation '(N/M)' is inserted in the respective table, indicating that no moderating effect had been measured in respect of respondents from either work site.

Table 12.10(a) reflects that of the 13 potential moderating effects by the group of 'personality' variables, 11 were found not to exist, or alternatively to be statistically insignificant, at both work sites. Both of the 2 moderating effects identified were found, however, to be work-site specific, i.e. they were not consistently significant across both work sites.

Table 12.10(a)

Moderating Effects: By Work-Site
Moderators: Personality Variables

APP.	LEVEL	INDEPENDENT VARIABLE	DEPENDENT VARIABLE	CHANGE IN R-SQUARED (1st Study)	CHANGE IN R-SQUARED (2nd Study)
D-1D	Above Ground	PFNPAR	JOBSAT	0.003	0.016
D-1E	Below Ground	PFNPAR	JOBSAT	0.003	0.011
(Effect work-site specific:)				(N/M)	(N/M)
D-2D	Above Ground	PPGOAL	JOBSAT	0.003	0.036
D-2E	Below Ground	PPGOAL	JOBSAT	0.023 #	0.023
(Effect work-site specific:)				(Yes)	(N/M)
D-3D	Above Ground	PPSAFE	JOBSAT	0.003	0.037
D-3E	Below Ground	PPSAFE	JOBSAT	0.014	0.024
(Effect work-site specific:)				(N/M)	(N/M)
D-4D	Above Ground	PPAGWD	JOBSAT	0.007	0.016
D-4E	Below Ground	PPAGWD	JOBSAT	0.009	0.010
(Effect work-site specific:)				(N/M)	(N/M)
D-5D	Above Ground	JOBSAT	SELPERF	0.012	0.060 @
D-5E	Below Ground	JOBSAT	SELPERF	0.003	0.005
(Effect work-site specific:)				(N/M)	(N/M)
D-6D	Above Ground	JOBSAT	SUPPERF	0.003	(N/A)
D-6E	Below Ground	JOBSAT	SUPPERF	0.012	(N/A)
(Effect work-site specific:)				(N/M)	(N/A)
D-7D	Above Ground	JOBSAT	PRSTAY	0.004	0.039
D-7E	Below Ground	JOBSAT	PRSTAY	0.016	0.049 #
(Effect work-site specific:)				(N/M)	(Yes)

= p < 0.05
@ = p < 0.10

Summary, number of:		
- no moderating effects :	6	5
- work-site specific effects :	1	1
- effects not work-site specific :	0	0

Table 12.10(b)

Moderating Effects: By Work-Site
Moderators: Managerial Control System Variables

APP.	LEVEL	INDEPENDENT VARIABLE	DEPENDENT VARIABLE	CHANGE IN R-SQUARED (1st Study)	CHANGE IN R-SQUARED (2nd Study)
D-1D	Above Ground	PFNPAR	JOBSAT	0.021	0.088 *
D-1E	Below Ground	PFNPAR	JOBSAT	0.036 *	0.017
(Effect work-site specific:)				(Yes)	(Yes)
D-2D	Above Ground	PPGOAL	JOBSAT	0.029 @	0.031
D-2E	Below Ground	PPGOAL	JOBSAT	0.037 *	0.023
(Effect work-site specific:)				(Yes)	(N/M)
D-3D	Above Ground	PPSAFE	JOBSAT	0.032 #	0.027
D-3E	Below Ground	PPSAFE	JOBSAT	0.052 **	0.031
(Effect work-site specific:)				(No)	(N/M)
D-4D	Above Ground	PPAGWD	JOBSAT	0.039 #	0.008
D-4E	Below Ground	PPAGWD	JOBSAT	0.052 **	0.024
(Effect work-site specific:)				(No)	(N/M)
D-5D	Above Ground	JOBSAT	SELPERF	0.024	0.089 #
D-5E	Below Ground	JOBSAT	SELPERF	0.036 *	0.014
(Effect work-site specific:)				(Yes)	(Yes)
D-6D	Above Ground	JOBSAT	SUPPERF	0.007	(N/A)
D-6E	Below Ground	JOBSAT	SUPPERF	0.007	(N/A)
(Effect work-site specific:)				(N/M)	(N/A)
D-7D	Above Ground	JOBSAT	PRSTAY	0.006	0.024
D-7E	Below Ground	JOBSAT	PRSTAY	0.036 *	0.013
(Effect work-site specific:)				(Yes)	(N/M)

** = p < 0.001
* = p < 0.01
# = p < 0.05
@ = p < 0.10

Summary, number of:		
- no moderating effects :	1	4
- work-site specific effects :	4	2
- effects not work-site specific :	2	0

Table 12.10(b) reflects that of the 13 potential moderating effects by the group of 'managerial control system' variables, 5 were found not to exist, or alternatively to be statistically insignificant, at both work sites. Of the 8 moderating effects identified, 6 were found to be work-site specific, i.e. they were not consistently significant across

both work sites. Two of the moderating effects were found to be not work-site specific, i.e. they were consistent at both work sites.

Table 12.10(c)

Moderating Effects: By Work-Site
Moderator: Managerial Commitment

APP.	LEVEL	INDEPENDENT VARIABLE	DEPENDENT VARIABLE	CHANGE IN R-SQUARED (1st Study)	CHANGE IN R-SQUARED (2nd Study)
D-1D	Above Ground	PFNPAR	JOBSAT	0.001	0.008
D-1E	Below Ground	PFNPAR	JOBSAT	0.001	0.017 @
(Effect work-site specific:)				(N/M)	(N/M)
D-2D	Above Ground	PPGOAL	JOBSAT	0.000	0.016
D-2E	Below Ground	PPGOAL	JOBSAT	0.014 #	0.025 #
(Effect work-site specific:)				(Yes)	(Yes)
D-3D	Above Ground	PPSAFE	JOBSAT	0.001	0.012
D-3E	Below Ground	PPSAFE	JOBSAT	0.022 *	0.005
(Effect work-site specific:)				(Yes)	(N/M)
D-4D	Above Ground	PPAGWD	JOBSAT	0.012 @	0.000
D-4E	Below Ground	PPAGWD	JOBSAT	0.016 *	0.005
(Effect work-site specific:)				(Yes)	(N/M)
D-5D	Above Ground	JOBSAT	SELPERF	0.005	0.015
D-5E	Below Ground	JOBSAT	SELPERF	0.032 **	0.008
(Effect work-site specific:)				(Yes)	(N/M)
D-6D	Above Ground	JOBSAT	SUPPERF	0.000	(N/A)
D-6E	Below Ground	JOBSAT	SUPPERF	0.001	(N/A)
(Effect work-site specific:)				(N/M)	(N/A)
D-7D	Above Ground	JOBSAT	PRSTAY	0.000	0.002
D-7E	Below Ground	JOBSAT	PRSTAY	0.003	0.003
(Effect work-site specific:)				(N/M)	(N/M)

** = p < 0.001
* = p < 0.01
# = p < 0.05
@ = p < 0.10

Summary, number of:		
- no moderating effects :	3	5
- work-site specific effects :	4	1
- effects not work-site specific :	0	0

Table 12.10(c) reflects that of the 13 potential moderating effects by the 'managerial commitment' variable, 8 were found not to exist, or alternatively to be statistically

insignificant, at both work sites. All of the 5 moderating effects identified were found, however, to be work-site specific, i.e. they were not consistently significant across both work sites.

The moderating effects reported in tables 12.10(a), (b), and (c) are summarised in table 12.10(d):

Table 12.10(d)

Summary of Moderation Effects: By Work-Site

CATEGORY OF MODERATOR VARIABLES	NO MODERATING EFFECT	WORK-SITE SPECIFIC EFFECTS	EFFECTS NOT WORK-SITE SPECIFIC
First Survey:			
Personality	6	1	0
Managerial Control System	1	4	2
Managerial Commitment	3	4	0
Totals, First Survey :	10	9	2
Second Survey:			
Personality	5	1	0
Managerial Control System	4	2	0
Managerial Commitment	5	1	0
Totals, Second Survey :	14	4	0

Table 12.10(d) reflects that:

- of the 21 moderated regression analyses undertaken across the two work-sites (above and below ground) in the first survey, 10 did not produce significant moderating effects at either site. Of the remaining 11, 9 of the moderating effects were found to be work-site specific, i.e. they were not consistently significant at both work-sites; and
- 14 of the 18 moderated regression analyses undertaken on the data from the second survey were excluded due to the lack of significant moderators at both sites. All of the remaining 4 moderating effects were found to be work-site specific.

These results indicated that the majority of the significant moderating effects of interest were work-site specific. The null hypothesis (Ho) could not therefore be supported in this instance. Accordingly the alternate hypothesis was supported.

12.4.3.6 Hypothesis 11

This hypothesis, in scientific form, stated:
'Most moderating effects on the relationships between participation, worker attitudes and performance are time specific.'

In statistical form, the hypothesis stated:
'The majority of measured moderating effects on associations between scores obtained on measures of employees' job satisfaction, perceived financial and decision-making participation, performance and stability are time specific.'

The null hypothesis (Ho) stated that the majority of these moderating effects were not time specific, or that the differences in the majority of moderating effects between times were so small (not significant) that they could be accounted for by chance.

For purposes of testing this hypothesis, a moderation effect was deemed to be time specific when:

- at least one of the moderating effects (i.e. at the time of either the first or second surveys) was significant; and
- the moderating effect at the time of the other survey was not significant.

A moderating effect was deemed not to be time specific when both the moderating effects (i.e. at the times of both the first and second surveys) were significant.

The changes in coefficients of determination used to test this hypothesis were extracted from tables 12.6, 12.7 and 12.8. Each table reported on the moderated effects measures on six relationships, for the entire samples of both surveys. Thus:

- table 12.6 reported that the 'personality' variables failed, as a group, to exert a significant moderating effect on any relationship, at either point in time;
- table 12.7 reported that the 'managerial control system' variables failed to identify a significant effect at both points in time for one relationship only (the regression of 'Propensity to Remain' on 'Job Satisfaction'). Of the remaining five relationships, two were consistent over time and three were not; and
- table 12.8 reported that the 'managerial commitment' variable failed to exert a significant moderating effect on any relationship, at either point in time.

These findings are now summarised in table 12.11.

Table 12.11

Summary of Moderating Effects: Longitudinal Comparisons

CATEGORY OF MODERATOR VARIABLES	NO MODERATING EFFECT	TIME SPECIFIC EFFECTS	EFFECTS NOT TIME SPECIFIC
Personality	6	0	0
Managerial Control System	1	3	2
Managerial Commitment	6	0	0
Totals :	13	3	2

Table 12.11 reflects that of the 18 moderated regression analyses undertaken at both points in time (the three regressions with the 'SUPPERF' measure as the dependent variable were excluded, as this variable was not measured in the second survey), 13 did not produce significant moderating effects at either point in time. Out of the remaining 5 analyses, 3 of the moderating effects were found to be time specific, i.e. they were not consistently significant in both surveys.

These results indicated that a majority of the significant moderating effects were time specific. The null hypothesis (Ho) could not therefore be supported in this instance. Accordingly the alternate hypothesis was supported.

12.4.3.7 SUMMARY AND CONCLUSION

The results of testing the hypotheses of moderating effects, as reported above, were mixed:

- hypothesis 6 was not supported, suggesting that personality factors do not moderate relationships between employees' perceived extent of participation, job satisfaction and performance;
- hypothesis 7 was partially supported (it was supported in the first survey, but could not be supported in the second survey). This indicated that employees' perceptions of aspects of the system of managerial control and communication moderate some of the relationships between their perceived extent of participation, job satisfaction and performance. However the extent of this moderating effect may not be consistent over time;
- hypothesis 8 was not supported, suggesting that employees' perceptions of managerial commitment to participation do not moderate the relationships between their perceived extent of participation, job satisfaction and performance;
- hypothesis 9 was supported, suggesting that most moderating effects on the relationships between participation, worker attitudes and performance are work-level specific;
- hypothesis 10 was supported, suggesting that most moderating effects on the relationships between participation, worker attitudes and performance are situation specific; and
- hypothesis 11 was supported, suggesting that most moderating effects on the relationships between participation, worker attitudes and performance are time specific.

Thus the hypothesised 'grouped' moderating effects of personality, managerial control system, and managerial commitment variables were generally not supported. However the hypotheses relating to the work-level-specific, work-site-

specific, and time specific nature of measured moderating effects were supported.

12.5 CONCLUSION

This chapter reported on the explanatory statistical findings of the research, and on the results of the testing of the statistical hypotheses. The following chapter will report on the results of the exploratory section of the research study. A detailed discussion of all the research findings will be provided in chapter 15.

CHAPTER 13

THE RESULTS OF THE EXPLORATORY ANALYSES

13.1 INTRODUCTION

The main objective of this chapter is to present the exploratory research findings. This section of the study aimed to build on the explanatory testing of the 'Model of Integrated Employee Participation (incorporating moderating effects)', by seeking a clearer picture of the dynamic interrelationships between the variables. To do this, a less stringent statistical criterion was used than in the hypothesis-testing section of the research. In that section only findings which met a probability criterion of $p < 0.05$ were considered. However for exploratory purposes this was relaxed to a probability criterion of $p < 0.10$.

In this chapter, these findings will be briefly interpreted, in order to clarify their meaning. A detailed discussion of all the research findings will be presented in chapter 15.

The research reported in this chapter was exploratory in nature because there were no tests of specific hypotheses. Indeed, as noted by Emory and Cooper (1991, p 144), such research is primarily hypothesis-generating in nature.

A structured approach was adopted towards the exploratory section of this study, which was divided into three parts:

- firstly, exploratory 'backward elimination' regression analyses were performed on the major outcome variables of the study. This was done primarily to determine the major predictors of each dependent variable, and to assist in the development of a detailed path model of integrated employee participation;
- secondly, moderated multiple regression analyses were performed on dependent variables other than those analysed in the hypothesis-testing section of the study.

This was done to explore for moderating effects in addition to those previously determined; and

- thirdly, a path model explicating the dynamic relationships between the major variables was developed and tested longitudinally. The objective of this section of the research was to consolidate the various findings of the study into an integrated model of employee participation, which would possess explanatory utility regarding the interrelationships between the variables.

This chapter presents the findings of this exploratory work, in the above sequence.

13.2 THE RESULTS OF THE EXPLORATORY MULTIPLE REGRESSION ANALYSES

This section reports the results of the exploratory multiple regression procedures performed in the study. The purpose of these analyses was to explore for likely predictor variables for each of the 'attitudinal' and 'behavioural' outcome variables. This in turn assisted in the development of the path model of integrated employee participation, to be described in section 13.4.

To explore for the significant predictors of each outcome variable, the 'Backward Elimination' multiple regression procedure was employed (S.A.S. procedures manual, 1990 p 1398). This procedure began by calculating the statistics for a full regression model, including all potential independent variables, as specified by the researcher. Non-significant variables were then removed from the regression model one at a time, until all the remaining variables produced 'F-value' statistics which were significant (as this was an exploratory exercise, significance was set at $p < 0.10$). The final regression contained the significant 'predictor' variables. This regression procedure was performed on each 'attitudinal' and 'behavioural' outcome variable of the study. The results thereof will be reported in the following sub-sections.

In interpreting the results of these exploratory multiple regression analyses, note was taken that the identification of 'predictor' variables by regression did not provide evidence of causality (Emory and Cooper, 1991 p 619). Thus it was possible that scores for 'predictor' variables in any regression were in fact caused by scores of the respective dependent variable. Also, a degree of multicollinearity existed between many of the independent variables, and under those circumstances the regression parameters were treated with caution (Emory and Cooper, 1991 p 634).

In view of the generally supportive findings of the factor analysis procedures, reported in chapter 11, that the questionnaire instruments had successfully measured discrete dimensions similar to the original variables, it was decided that these and subsequent exploratory analyses would be undertaken using the raw data scores obtained in the two surveys.

The results of the exploratory multiple regression analyses are reported in respect of the first survey's data only. This is because the main purpose of this section of the research was to seek 'predictor' variables for incorporation in the path model. The model itself was tested on the data from both surveys; the results thereof will be reported in section 13.4.2.

13.2.1 PREDICTORS OF THE 'SATISFACTION WITH FINANCIAL PARTICIPATION' VARIABLE SCORES

This section reports on the exploratory multiple regression analysis performed on the 'FINSAT' ('Satisfaction with Financial Participation') variable. The results of the stepwise 'Backward Elimination' regression procedure, described above, are reported in table 13.1. In this and subsequent multiple regression reports, the following statistics are presented:

- the 'beta' partial regression coefficients for each predictor variable ($p < 0.10$);
- the standard error of each predictor variable;

- the 'F-value' for each predictor variable, used to test the null hypothesis that the value of the respective beta was not significantly different from zero;
- the statistical level of significance of each 'beta';
- the 'beta', standard error, 'F-value' and significance of the intercept; and
- the coefficient of determination ('r-squared'), the 'F-value', and the level of significance of the overall regression.

Table 13.1

Backward Elimination Multiple Regression:
Satisfaction with Financial Participation ('FINSAT')
(n = 525)

VARIABLE	BETA	STANDARD ERROR	F-VALUE	
PFNPAR	0.447	0.037	146.68	**
PERMCOP	0.161	0.018	75.77	**
NPERCEVF	-0.135	0.038	12.97	**
LANG	0.217	0.077	7.91	*
PPGOAL	0.083	0.028	9.00	*
GWDSAT	0.210	0.071	8.72	*
PRSTAY	0.155	0.051	9.27	*
YEARS	0.050	0.021	5.83	#
PPSAFE	-0.118	0.053	5.01	#
EDUC	0.234	0.126	3.43	@
INTERCEPT	-6.234	1.246	25.06	**
R-SQUARED	0.547		62.11	**

** = p < 0.001
* = p < 0.01
# = p < 0.05
@ = p < 0.10

Based on the above analysis of the first data-set, the regression equation to predict values of 'FINSAT' ('Satisfaction with Financial Participation') may be expressed as follows:

$$-6.234 + 0.447(\text{PFNPAR}) + 0.161(\text{PERMCOP}) - 0.135(\text{NPERCEVF}) + 0.217(\text{LANG}) + 0.083(\text{PPGOAL}) + 0.210(\text{GWDSAT}) + 0.155(\text{PRSTAY}) + 0.050(\text{YEARS}) - 0.118(\text{PPSAFE}) + 0.234(\text{EDUC}).$$

This regression produced a plausible set of 'predictors' of 'FINSAT' scores:

- the most significant predictor was the 'PFNPAR' ('Perceived Extent of Financial Participation') score. This was plausible, as one would expect satisfaction with a financial participation scheme to improve as the perceived benefits increased;
- 'PPGOAL' ('Perceived Extent of Participation in Work Target Setting') scores and 'PPSAFE' ('Perceived Extent of Participation in Safety-Related Decision-Making') scores were both predictors. This indicated a possible inter-relationship between financial- and decision-making participation in the determination of employees' satisfaction with financial participation;
- scores on the biographical variables of 'LANG' ('Home Language'), 'YEARS' ('Tenure in Years') and 'EDUC' ('Education Level') were all predictors, suggesting that the level of seniority and education, and the language group, of an employee may have affected his attitudes towards financial participation;
- 'Perceived Managerial Commitment to Integrated Employee Participation' ('PERMCOP') scores were predictors of 'FINSAT' scores. This was expected, and consistent with the propositions of White (1979b), and Kelly and Kelly (1990), that managerial attitudes towards participation may moderate its effects;
- 'NPERCEVF' ('Perceived Fairness of Supervisory Evaluation') scores predicted 'FINSAT' scores. This indicated that supervisors' styles of evaluation may affect employees' satisfaction with financial participation schemes;
- 'PRSTAY'('Employees' Propensity to Remain') scores 'predicted' 'FINSAT' scores. However, while an association between these variables was anticipated, the direction of that relationship (i.e. whether 'PRSTAY' was caused by, or itself caused, 'FINSAT') could not, as discussed in section 13.2 above, be established statistically. This issue will be addressed further, in

the exploratory multiple regression analysis on the 'PRSTAY' variable to be discussed in section 13.2.5.

13.2.2 PREDICTORS OF THE 'SATISFACTION WITH PARTICIPATION IN WORK-RELATED DECISION-MAKING' VARIABLE SCORES

This section reports on the exploratory multiple regression analysis performed on the 'GWDSAT' ('Satisfaction With Participation in Work-Related Decision-Making') variable. The results of the stepwise 'Backward Elimination' regression procedure are reported in table 13.2.

Table 13.2

Backward Elimination Multiple Regression:
Satisfaction with Participation in Work-Related Decision-Making
('GWDSAT')
(n = 525)

VARIABLE	BETA	STANDARD ERROR	F-VALUE	
PPAGWD	0.110	0.031	12.57	**
PPGOAL	0.066	0.169	15.41	**
FINSAT	0.059	0.021	7.94	*
LANG	-0.135	0.046	8.72	*
EDUC	-0.208	0.076	7.43	*
LOCCONT	0.053	0.026	4.21	#
AUTHORM	0.053	0.025	4.54	#
NPERCEVF	0.050	0.021	5.77	#
PPSAFE	0.061	0.032	3.72	@
PRSTAY	-0.061	0.031	3.80	@
INTERCEPT	2.822	1.011	7.79	*
R-SQUARED	0.302		22.23	**

** = p < 0.001
* = p < 0.01
# = p < 0.05
@ = p < 0.10

Based on the above analysis of the first data-set, the regression equation to predict values of 'GWDSAT' ('Satisfaction With Participation in Work-Related Decision-Making') may be expressed as follows:

$$2.822 + 0.110(PPAGWD) + 0.066(PPGOAL) + 0.059(FINSAT) - 0.135(LANG) - 0.208(EDUC) + 0.053(LOCCONT) + 0.053(AUTHORM) + 0.050(NPERCEVF) + 0.061(PPSAFE) - 0.061(PRSTAY)$$

This regression produced a plausible set of 'predictors' of 'GWDSAT' scores:

- the most significant 'predictor' was the 'PPAGWD' ('Perceived Extent of Participation in General Work-Related Decision-Making') score. This was plausible, as one would expect satisfaction with decision-making participation to improve as the perceived extent of that participation increased;
- 'PPGOAL' ('Perceived Extent of Participation in Work Target Setting') scores and 'PPSAFE' ('Perceived Extent of Participation in Safety-Related Decision-Making') scores were both predictors, indicating a possible inter-relationship between specific and general forms of decision-making participation, and the effects thereof;
- scores on the biographical variables of 'LANG' ('Home Language') and 'EDUC' ('Education Level') were both predictors. This suggested, consistent with the findings in the regression analysis on 'FINSAT' ('Satisfaction With Financial Participation') that the level of education, and the language group of an employee may have affected his attitudes towards participative management initiatives;
- 'NPERCEVF' ('Perceived Fairness of Supervisory Evaluation') scores were predictors of 'GWDSAT' scores. They had also predicted 'FINSAT' ('Satisfaction with Financial Participation') scores. This provided further evidence that supervisory style may play an important role in determining the effects of participation schemes (Oldham, 1975; Otley, 1978);
- scores on the 'personality' variables of 'LOCCONT' ('Work Locus of Control') and 'AUTHORM' ('Authoritarianism') were predictors of 'GWDSAT' scores. This was noted to be in contrast to the findings of the 'FINSAT' ('Satisfaction with Financial Participation') regression

analysis, where personality variables' scores failed to predict the dependent variable scores. This suggested that the personalities of employees may have had a significant impact on their propensity to be influenced by, or to influence, decision-making participation programmes. However, as scores on the 'personality' variables were not predictors of 'FINSAT' scores (see section 13.2.1 above), this may not have applied in respect of financial participation schemes;

- 'PRSTAY' ('Employees' Propensity to Remain') scores also 'predicted' 'GWDSAT' scores. As noted previously, however, the direction of the relationship between these variables could not be established in this analysis. Also, it was noted that this 'predictor' variable had a negative 'beta' coefficient. This was not as expected, and was attributed to the multicollinearity between variables in the regression. The negative 'beta' was therefore not interpreted in this instance;
- a possible interrelationship between the effects of financial- and decision-making forms of participation was further supported in this analysis by 'FINSAT' ('Satisfaction With Financial Participation') scores 'predicting' 'GWDSAT' scores.

13.2.3 PREDICTORS OF THE 'ORGANISATIONAL COMMITMENT' VARIABLE SCORES

This section reports on the exploratory multiple regression analysis performed on the 'ATTCOM' ('Organisational Commitment') variable. The results of the stepwise 'Backward Elimination' regression procedure are reported in table 13.3.

Based on the results reported in table 13.3, the regression equation to predict values of 'ATTCOM' ('Organisational Commitment') may be expressed as follows:

$$10.750 + 0.215(\text{PFNPAR}) + 0.132(\text{PERMCOP}) + 0.312(\text{PRSTAY}) - 0.259(\text{LANG}) + 0.416(\text{EDUC}) + 0.108(\text{PPAGWD}) - 0.142(\text{LOCCONT}) - 0.608(\text{SUPPERF}) + 0.677(\text{SITU}) + 0.751(\text{COURSE}) + 0.045(\text{JOBSAT})$$

Table 13.3

Backward Elimination Multiple Regression:
Organisational Commitment ('ATTCOM')
(n = 525)

VARIABLE	BETA	STANDARD ERROR	F-VALUE	
PFNPAR	0.215	0.043	24.50	**
PERMCOP	0.132	0.019	47.37	**
PRSTAY	0.312	0.061	25.86	**
LANG	-0.259	0.093	7.84	*
EDUC	0.416	0.153	7.37	*
PPAGWD	0.108	0.056	3.72	*
LOCCONT	-0.142	0.051	7.86	*
SUPPERF	-0.608	0.191	10.10	*
SITU	0.677	0.344	3.87	#
COURSE	0.751	0.334	5.06	#
JOBSAT	0.045	0.025	3.35	@
INTERCEPT	10.750	1.688	40.55	**
R-SQUARED	0.413		32.77	**

** = p < 0.001
* = p < 0.01
# = p < 0.05
@ = p < 0.10

This regression produced a plausible set of 'predictors' of 'ATTCOM' scores:

- the most significant 'predictors' were the 'PFNPAR' ('Perceived Extent of Financial Participation'), 'PERMCOP' ('Perceived Managerial Commitment to Integrated Employee Participation'), and 'PRSTAY' ('Employees' Propensity to Remain') scores. These were plausible, and consistent with the theory-building and empirical research literature reviewed in chapter 6. However, as previously discussed, the determination of the causal ordering of 'PRSTAY' and other outcome variables was problematic. This will be discussed further in section 13.2.5;
- 'PPAGWD' ('Perceived Extent of Participation in General Work-Related Decision-Making') scores predicted the 'ATTCOM' scores. This, together with the predictive ability of 'PFNPAR' ('Perceived Extent of Financial Participation') scores, noted above, suggested that both

financial and decision-making participation programmes had a positive impact on organisational commitment;

- scores on the biographical variables of 'LANG' ('Home Language'), 'EDUC' ('Education Level'), 'SITU' ('Work Site'), and 'COURSE' ('Attendance at Company Orientation Course') were all predictors. This suggested that there was a variation in levels of organisational commitment among different groups of employees, depending on their home language, education level, and whether they worked above or below ground-level. Also of significance was the strong predictive ability of 'COURSE' scores. This suggested that the exposure of employees to the company's orientation course had a positive impact on their commitment to the organisation;
- 'SUPPERF' ('Employee Supervisor-Rated Performance') was a strong 'predictor'. However the negative 'beta' in this instance was difficult to interpret, and may have been caused by multicollinearity between the independent variables of the regression. It was noted that the correlations between 'SUPPERF' and 'ATTCOM' scores (see appendix C1-7) had not been significant, and that a significant predictive relationship between these two variables was therefore unlikely; and
- 'JOBSAT' ('Job Satisfaction') scores predicted 'ATTCOM' scores. This was expected, but as noted by Curry et al (1986), the determination of the causal ordering of these two variables is problematic. Indeed, as noted in section 13.2.4 below, 'ATTCOM' scores predicted 'JOBSAT' scores at a higher significance than obtained here.

13.2.4 PREDICTOR VARIABLES OF THE 'JOB SATISFACTION' VARIABLE SCORES

This section reports on the exploratory multiple regression analysis performed on the 'JOBSAT' ('Job Satisfaction') variable. The results of the stepwise 'Backward Elimination' regression procedure are reported in table 13.4.

Table 13.4

Backward Elimination Multiple Regression:
Job Satisfaction ('JOBSAT')
(n = 525)

VARIABLE	BETA	STANDARD ERROR	F-VALUE	
SITU	-2.110	0.574	13.50	**
PRSTAY	0.505	0.107	22.05	**
PPAGWD	0.498	0.103	23.35	**
PERMCOP	0.191	0.037	25.95	**
YEARS	0.140	0.043	10.68	*
LEVEL	1.048	0.427	6.02	#
PPGOAL	-0.132	0.054	6.10	#
NPERCATT	0.176	0.089	3.89	#
NPERCEVF	0.182	0.077	5.52	#
ATTCOM	0.157	0.073	4.58	#
MARR	-1.612	0.906	3.17	@
COURSE	1.109	0.580	3.66	@
INTERCEPT	-0.157	3.060	0.00	
R-SQUARED	0.394		27.69	**

** = p < 0.001
* = p < 0.01
# = p < 0.05
@ = p < 0.10

Based on the above analysis of the first data-set, the regression equation to predict values of 'JOBSAT' ('Job Satisfaction') may be expressed as follows:

$$-0.157 - 2.110(SITU) + 0.505(PRSTAY) + 0.498(PPAGWD) + 0.191(PERMCOP) + 0.140(YEARS) + 1.048(LEVEL) - 0.132(PPGOAL) + 0.176(NPERCATT) + 0.182(NPERCEVF) + 0.157(ATTCOM) - 1.612(MARR) + 1.109(COURSE)$$

This regression produced a plausible set of 'predictors' of 'JOBSAT' scores:

- the most significant predictors were the 'SITU' ('Work Site'), 'PRSTAY' ('Employees' Propensity to Remain'), 'PPAGWD' ('Perceived Extent of Participation in General Work-Related Decision-Making'), and 'PERMCOP' ('Perceived Managerial Commitment to Integrated Employee Participation') scores. These were consistent with the

theory-building and empirical research literature reviewed in previous chapters. The negative 'beta' computed for the 'SITU' ('Work Site') predictor indicated that employees working below ground-level were less satisfied with their jobs than those working above-ground;

- scores on biographical variables ('YEARS', 'LEVEL', 'MARR' and 'COURSE') were all predictors. This suggested that there was a variation in levels of job satisfaction between different groups of employees, and that this may have depended on their tenure, level in the hierarchy, and marital status. In addition, attendance at the company's orientation course was a significant predictor, as had been the case in the regression analysis on the 'ATTCOM' ('Organisational Commitment') variable;
- 'PPGOAL' ('Perceived Extent of Participation in Work Target Setting') scores were strong predictors. However the negative 'beta' of this variable was difficult to interpret. It was noted that the correlations between 'PPGOAL' and 'JOBSAT' scores (see appendix C1-5) had been significant and positive, and had been used to support hypothesis number 3. It was suspected that the negative beta in this instance may have been caused by multicollinearity between independent variables. It was therefore concluded that 'PPGOAL' was a likely predictor of the 'JOBSAT' variable;
- 'ATTCOM' scores predicted 'JOBSAT' scores. As observed in section 13.2.3, this was at a higher significance than obtained by 'JOBSAT' scores, when regressed on 'ATTCOM' scores; and
- scores for the 'managerial control system' variables of 'NPERCATT' ('Perceived Attainability of Employee Goals') and 'NPERCEVF' ('Perceived Fairness of Supervisory Evaluation') were predictors of 'JOBSAT' scores. This supported the propositions by theoretical commentators that levels of job satisfaction may have been affected by different methods of work-target setting (Shalley and Oldham, 1985), and by varying styles of supervision (DeCoster and Fertakis, 1968).

13.2.5 PREDICTOR VARIABLES OF THE 'EMPLOYEES' PROPENSITY TO REMAIN' VARIABLE SCORES

This section reports on the exploratory multiple regression analysis performed on the 'PRSTAY' ('Employees' Propensity to Remain') variable. The results of the stepwise 'Backward Elimination' regression procedure are reported in table 13.5.

Table 13.5

Backward Elimination Multiple Regression:
Employees' Propensity to Remain
(in Current Employment)
('PRSTAY')
(n = 525)

VARIABLE	BETA	STANDARD ERROR	F-VALUE	
EDUC	-0.382	0.091	17.49	**
NPERCEVF	0.107	0.027	16.41	**
FINSAT	0.091	0.027	11.06	**
ATTCOM	0.138	0.028	24.57	**
JOBSAT	0.080	0.016	25.59	**
COURSE	-0.620	0.225	7.61	*
INTERCEPT	7.170	0.808	78.81	**
R-SQUARED	0.316		39.98	**

** = p < 0.001
* = p < 0.01

Based on the above analysis of the first data-set, the regression equation to predict values of 'PRSTAY' ('Employees' Propensity to Remain') may be expressed as follows:

$$7.170 - 0.382(\text{EDUC}) + 0.107(\text{NPERCEVF}) + 0.091(\text{FINSAT}) + 0.138(\text{ATTCOM}) + 0.080(\text{JOBSAT}) - 0.620(\text{COURSE})$$

This regression produced comparatively few 'predictors' of 'PRSTAY' scores:

- scores for 'EDUC' and 'COURSE' were predictors. This was consistent with findings from the previous regressions on attitudinal outcome variables, reported above. It was noted that 'COURSE' ('Attendance at Company Orientation Course') scores were again significant predictors. The negative 'beta' computed for the 'EDUC' ('Education Level') variable indicated that employees with lower

levels of education were more inclined to resign than those with higher levels of education;

- 'ATTCOM' and 'JOBSAT' scores 'predicted' 'PRSTAY' scores, reflecting strong associations between these outcome variables. This regression analysis could not, however, provide support for a specific causal ordering of these variables;
- scores for 'NPERCEVF' ('Perceived Fairness of Supervisory Evaluation Style') predicted 'PRSTAY' scores. This further supported the proposition (DeCoster and Fertakis, 1968) that employee attitudes and behaviour may have been enhanced by certain styles of supervision; and
- 'FINSAT' ('Satisfaction with Financial Participation') scores were significant predictors of 'Propensity to Remain' scores. This was noteworthy, because scores for 'FINSAT' had failed to predict 'JOBSAT' ('Job Satisfaction') scores, whereas scores for 'GWDSAT' ('Satisfaction with Participation in Work-Related Decision-Making') scores had predicted 'JOBSAT' scores. These findings suggested that financial- and decision-making participation programmes may have led to differing attitudinal and behavioural outcomes. Thus if employees were dissatisfied with their financial remuneration, they may have felt obliged to seek better remuneration, offered by alternative employment opportunities.

13.2.6 PREDICTORS OF THE 'EMPLOYEES' SELF-RATED PERFORMANCE' VARIABLE SCORES

This section reports on the exploratory multiple regression analysis performed on the 'SELPERF' ('Employees' Self-Rated Performance') variable. The results of the stepwise 'Backward Elimination' regression procedure are reported in table 13.6.

Table 13.6

Backward Elimination Multiple Regression:
Employees' Self-Rated Performance ('SELPERF')
(n = 525)

VARIABLE	BETA	STANDARD ERROR	F-VALUE	
NPERCEVF	0.240	0.054	19.52	**
SUPPERF	2.096	0.261	64.48	**
AGE	0.075	0.027	7.46	*
PPAGWD	0.213	0.083	6.54	*
PPSAFE	0.173	0.082	4.50	#
AUTHORM	-0.152	0.067	5.10	#
GWDSAT	-0.192	0.116	2.73	@
MARR	1.213	0.730	2.76	@
PFNPAR	-0.107	0.058	3.41	@
INTERCEPT	18.495	2.492	55.10	**
R-SQUARED	0.243		18.33	**

** = p < 0.001
* = p < 0.01
# = p < 0.05
@ = p < 0.10

Based on the above analysis of the first data-set, the regression equation to predict values of 'SELPERF' ('Employees' Self-Rated Performance') may be expressed as follows:

$$18.495 + 0.240(\text{NPERCEVF}) + 2.096(\text{SUPPERF}) + 0.075(\text{AGE}) + 0.213(\text{PPAGWD}) + 0.173(\text{PPSAFE}) - 0.152(\text{AUTHORM}) - 0.192(\text{GWDSAT}) + 1.213(\text{MARR}) - 0.107(\text{PFNPAR})$$

This regression produced 9 'predictors' of 'SELPERF' scores:

- the most significant predictors were the scores recorded on the 'NPERCEVF' ('Perceived Fairness of Supervisory Evaluation') and 'SUPPERF' ('Employees' Supervisor-Rated Performance') variables. This suggested an association between the style and content of a supervisor's evaluation of an employee's performance, and how that employee perceived his own performance;
- scores on four 'participation' variables were predictors. These were: 'PPAGWD' ('Perceived Extent of Participation in General Work-Related Decision-Making'), 'PPSAFE'

('Perceived Extent of Participation in Safety-Related Decision-Making'), 'PFNPAR' ('Perceived Extent of Financial Participation'), and 'GWDSAT' ('Satisfaction With Participation in Work-Related Decision-Making') scores. This indicated a predictive association between employees' perceptions of their own performance, and their perceived extent of, and satisfaction with, participative management;

- the scores on the biographical variables of 'AGE' and 'MARR' ('Marriage Status') were predictors of 'SELPERF' scores. This suggested that, as employees grew older and assumed marital responsibilities, they perceived that their performance was improving.

13.2.7 PREDICTOR VARIABLES OF THE 'EMPLOYEES' SUPERVISOR-RATED PERFORMANCE' VARIABLE SCORES

This section reports on the exploratory multiple regression analysis performed on the 'SUPPERF' ('Employees' Supervisor-Rated Performance') variable. The results of the stepwise 'Backward Elimination' regression procedure are reported in table 13.7.

Based on the results reported in table 13.7, the regression equation to predict values of 'SUPPERF' ('Employees' Supervisor-Rated Performance') may be expressed as follows:

$$1.021 + 0.048(SELPERF) + 0.058(LANG) - 0.026(NPERCEVF) + 0.018(PFNPAR) + 0.035(GWDSAT) - 0.021(ATTCOM) + 0.010(JOBSAT) - 0.015(NEEDIND) + 0.021(PERFEED) + 0.179(COURSE)$$

Table 13.7

Backward Elimination Multiple Regression:
Employee Supervisor-Rated Performance ('SUPPERF')
(n = 525)

VARIABLE	BETA	STANDARD ERROR	F-VALUE	
SELPERF	0.048	0.006	57.14	**
LANG	0.058	0.018	9.81	*
NPERCEVF	-0.026	0.009	7.49	*
PFNPAR	0.018	0.009	3.93	#
GWDSAT	0.035	0.017	4.33	#
ATTCOM	-0.021	0.009	5.52	#
JOBSAT	0.010	0.005	4.09	#
NEEDIND	-0.015	0.009	2.79	@
PERFEED	0.021	0.011	3.80	@
COURSE	0.179	0.072	6.25	@
INTERCEPT	1.021	0.430	5.64	#
R-SQUARED	0.206		13.30	**

** = p < 0.001
* = p < 0.01
# = p < 0.05
@ = p < 0.10

This regression produced 10 'predictors' of 'SUPPERF' scores:

- the scores for 'NPERCEVF' ('Perceived Fairness of Supervisory Evaluation'), 'PFNPAR' ('Perceived Extent of Financial Participation', and 'GWDSAT' ('Satisfaction With Participation in Work-Related Decision-Making') predicted scores on both self-rated ('SELPERF') and supervisor-rated ('SUPPERF') performance variables;
- other outcome variables' scores ('SELPERF', 'ATTCOM', and 'JOBSAT') all 'predicted' the values of 'SUPPERF' scores. As previously discussed, the causal ordering of such variables could not be established by this analysis;
- 'COURSE' ('Attendance at Company Orientation Course') scores predicted 'SUPPERF' scores, indicating a further link between the company's communication and training efforts, and enhanced employee performance. This aspect was further supported by 'PERFEED' ('Perceived Extent of Feedback Relating to Employee's Performance') scores also predicting 'SUPPERF' values. Thus ongoing feedback and reinforcement of information to employees would appear to

have a significant effect on an employee's performance (as rated by his supervisor).

13.2.8 CONCLUSION

The results of the exploratory multiple regression analyses, reported above, provided an indication of which variables might be suitable for inclusion in a path model of integrated employee participation. They also suggested which variables might be expected to directly affect the values of others, within such a model. The following observations were also made:

- scores for various 'biographical' and 'personality' variables were 'predictors' of a number of dependent variable scores within these analyses. There was, however, no discernable pattern as to the circumstances under which such relationships occurred;
- a strong predictive relationship appeared to exist between the 'perceived extent of participation' variables and the respective 'satisfaction with participation' variables;
- 'managerial commitment to participation' appeared to have a strong predictive impact on scores for various 'satisfaction' variables;
- the 'managerial communication and control system' variables' scores appeared to predict scores of both attitudinal (e.g. 'Satisfaction With Financial Participation' and 'Job Satisfaction') and behavioural (e.g. 'Propensity to Remain' and 'Employee Self-Rated Performance') outcome variables; and
- there were a number of predictive relationships identified between the measures of 'perceived extent of participation', 'satisfaction with participation schemes', 'job satisfaction' and 'performance'. For example, 'Perceived Extent of Financial Participation' scores predicted 'Satisfaction With Financial Participation' scores, and 'Job Satisfaction' scores predicted both 'Propensity to Remain' and 'Employee Supervisor-Rated Performance scores.

Section 13.4.1 of this chapter will detail the development of the path model of integrated employee participation, pursuant to the above findings. Section 13.4.2 will report on the testing of the model, on the data from both the first and second surveys.

13.3 THE RESULTS OF THE EXPLORATORY MODERATED MULTIPLE REGRESSION ANALYSES

This section reports on the results of the exploratory moderated multiple regression analyses. The purpose of this part of the research was to explore for moderating effects other than those determined in the explanatory section, reported in chapter 12.

The methodology adopted for these analyses was identical to that used in the previously-reported moderated multiple regression analyses, and will not be detailed again here. Using the less stringent statistical probability criterion for the exploratory section of the research, the focus of these analyses was to explore for significant moderating effects on the relationships between:

- employees' perceived extent of participation (both financial and in decision-making) and their satisfaction with these forms of participation; and
- employee's perceived extent of participation (both financial and in decision-making) and 'ATTCOM' ('Organisational Commitment').

It was decided to explore for potential moderating effects on these relationships because:

- they were the remaining relationships between 'participation' and 'attitudinal' variables, not studied within the explanatory section of the research; and
- it was suspected that the relationships between employee participation and job satisfaction may have been different to those between employee participation and satisfaction with the participation schemes themselves. Ramsay et al (1992), for instance, had suggested that work-based attitudes were complex constructs which were

unlikely to be significantly affected by a financial incentive scheme. Their research findings (previously reported: see section 4.4.1.2 of chapter 4) suggested that employees were not motivated to 'participate financially' by feelings of organisational identification or commitment, but rather by perceived financial opportunism. This indicated that levels of 'satisfaction with participation' and of 'job satisfaction' could be determined (and moderated) by quite separate factors.

In this case, therefore, 'grouped' moderating effects were tested in respect of the 'personality', 'managerial control system', and 'managerial commitment' variables on the following regressions:

- 'PFNPAR' ('Perceived Extent of Financial Participation', independent variable) and 'FINSAT' ('Satisfaction With Financial Participation', dependent variable);
- 'PFNPAR' ('Perceived Extent of Financial Participation', independent variable) and 'ATTCOM' ('Organisational Commitment', dependent variable);
- 'PPGOAL' ('Perceived Extent of Participation in Work Target Setting', independent variable) and 'GWDSAT' ('Satisfaction With Participation in Work-Related Decision-Making', dependent variable);
- 'PPGOAL' ('Perceived Extent of Participation in Work Target Setting', independent variable) and 'ATTCOM' ('Organisational Commitment', dependent variable);
- 'PPSAFE' ('Perceived Extent of Participation in Safety-Related Decision-Making', independent variable) and 'GWDSAT', ('Satisfaction With Participation in Work-Related Decision-Making', dependent variable)';
- 'PPSAFE' ('Perceived Extent of Participation in Safety-Related Decision-Making', independent variable) and 'ATTCOM' ('Organisational Commitment', dependent variable);
- 'PPAGWD' ('Perceived Extent of Participation in General Work-Related Decision-Making', independent variable) and 'GWDSAT' ('Satisfaction With Participation in Work-Related Decision-Making', dependent variable); and

- 'PPAGWD' ('Perceived Extent of Participation in General Work-Related Decision-Making, independent variable) and 'ATTCOM' ('Organisational Commitment', dependent variable).

These moderated multiple regression analyses were performed on the entire (unstratified) samples, at both points in time. The detailed reports for each of the analyses are contained in appendices D - 8 to 15. An explanation of the statistics presented in these reports can be found in section 12.4 of chapter 12.

Tables 13.8, 13.9, and 13.10 summarise the moderating effects identified in these analyses. Table 13.8 reports the 'grouped' moderating effect of the 'personality' set of variables, being 'LOCCONT' ('Work Locus of Control'), 'NEEDIND' ('Need For Independence'), and 'AUTHORM' ('Authoritarianism') on each regression. The table reflects, for each analysis, the moderating effect of introducing the 'interaction' terms for the 'personality' moderators as a set, i.e. the difference between the 'r (moderated)' and 'r (linear)' coefficients of determination. The significance of each moderating effect, as indicated by the 'F-value' statistic for the interaction terms, is also reported. A detailed description of this test is contained in section 12.4.3 of chapter 12.

The criteria for determining a 'significant' moderating effect in this exploratory section of the research were:

- the difference between the 'r (moderated)' and 'r (linear)' coefficients equalled, or exceeded, 0.01; and
- the statistical significance of the moderating effect, as determined by the 'F-value' of the interaction terms (see section 12.4.3 of chapter 12) was $p < 0.10$.

Table 13.8 reflects that the 'personality' variables of 'LOCCONT' ('Work Locus of Control'), 'NEEDIND' ('Need For Independence') and 'AUTHORM' ('Authoritarianism') failed to exert, as a set, a significant moderating effect on any of the

regressions of interest. This was consistent with the findings of chapter 12, which similarly reported a lack of moderating effects by the 'personality' set of variables.

Table 13.8

Moderating Effects: Personality Variables

APPENDIX	INDEPENDENT VARIABLE	DEPENDENT VARIABLE	CHANGE IN R-SQUARED (1st Study) (n = 525)	CHANGE IN R-SQUARED (2nd Study) (n = 234)
D - 8	PFNPAR	FINSAT	0.008 @	0.008
D - 9	PFNPAR	ATTCOM	0.003	0.005
D - 10	PPGOAL	GWDSAT	0.002	0.008
D - 11	PPGOAL	ATTCOM	0.003	0.010
D - 12	PPSAFE	GWDSAT	0.002	0.004
D - 13	PPSAFE	ATTCOM	0.007	0.003
D - 14	PPAGWD	GWDSAT	0.002	0.008
D - 15	PPAGWD	ATTCOM	0.004	0.008

@ = p < 0.10

Table 13.9 reports the moderating effect of the 'managerial control system' group of variables, being 'NPERCATT' ('Perceived Attainability of Employee Goals'), 'NPERCEVF' ('Perceived Fairness of Supervisory Evaluation'), 'PEROLAP' ('Perceived Extent of Overlap of Employee's Assigned Areas of Responsibility and Control'), and 'PERFEED' ('Perceived Extent of Feedback Relating to Employee's Performance') on each regression.

Table 13.9 reflects that these 'managerial control system' variables exerted, as a set, a significant moderating effect on four of the regressions in the first survey, and on one regression in the second survey. These regressions had either 'PPSAFE' ('Perceived Extent of Participation in Safety-Related Decision-Making') or 'PPAGWD' ('Perceived Extent of Participation in General Work-Related Decision-Making') as the independent variable.

Table 13.9

Moderating Effects: Managerial Control System Variables

APPENDIX	INDEPENDENT VARIABLE	DEPENDENT VARIABLE	CHANGE IN R-SQUARED (1st Study) (n = 525)	CHANGE IN R-SQUARED (2nd Study) (n = 234)
D - 8	PFNPAR	FINSAT	0.006	0.007
D - 9	PFNPAR	ATTCOM	0.006	0.010
D - 10	PPGOAL	GWDSAT	0.007	0.020
D - 11	PPGOAL	ATTCOM	0.004	0.020
D - 12	PPSAFE	GWDSAT	0.015 #	0.054 **
D - 13	PPSAFE	ATTCOM	0.022 *	0.016
D - 14	PPAGWD	GWDSAT	0.029 **	0.003
D - 15	PPAGWD	ATTCOM	0.016 #	0.020

** = p < 0.001
* = p < 0.01
# = p < 0.05

Although moderating effects of at least a 0.01 increase in the coefficient of determination were achieved in six of the eight regressions undertaken in the second study, only one (in the regression of 'PPSAFE' on 'GWDSAT') was statistically significant. These findings nevertheless provided support for the proposition that 'managerial control system' variables may moderate the effects of employee decision-making participation schemes.

Further, these findings were significant in that a greater number of moderating effects had been determined here than in the explanatory section of the research (which tested solely for moderating effects on regressions with 'Job Satisfaction' as the dependent variable). The moderating effects reported here were also generally of a higher statistical significance than those reported in the explanatory section of the research. This suggested that 'managerial control system' factors may exert a greater moderating effect on the relationship between employees' perceived extent of decision-making participation and satisfaction therewith, than on the relationship between their perceived extent of participation and job satisfaction.

Table 13.10 reports the moderating effect of the 'PERMCOP' ('Perceived Managerial Commitment to Integrated Employee Participation') variable on each regression.

Table 13.10

Moderating Effects: Managerial Commitment Variable

APPENDIX	INDEPENDENT VARIABLE	DEPENDENT VARIABLE	CHANGE IN R-SQUARED (1st Study) (n = 525)	CHANGE IN R-SQUARED (2nd Study) (n = 234)
D - 8	PFNPAR	FINSAT	0.004 #	0.002
D - 9	PFNPAR	ATTCOM	0.000	0.010 @
D - 10	PPGOAL	GWDSAT	0.005 @	0.006
D - 11	PPGOAL	ATTCOM	0.001	0.001
D - 12	PPSAFE	GWDSAT	0.010 #	0.026 *
D - 13	PPSAFE	ATTCOM	0.000	0.001
D - 14	PPAGWD	GWDSAT	0.224 @	0.001
D - 15	PPAGWD	ATTCOM	0.000	0.001

* = p < 0.01
\# = p < 0.05
@ = p < 0.10

Table 13.10 reflects that the 'PERMCOP' ('Perceived Managerial Commitment to Integrated Employee Participation') variable exerted a significant ($p < 0.10$) moderating effect on two of the relationships of interest in the first study. These were the regressions of, firstly, 'PPSAFE' ('Perceived Extent of Participation in Safety-Related Decision-Making', independent variable) and, secondly, 'PPAGWD' ('Perceived Extent of Participation in General Work-Related Decision-Making', independent variable) with 'GWDSAT' ('Satisfaction With Participation in Work-Related Decision-Making', dependent variable). In the analyses on the data from the second survey, two significant ($p < 0.10$) moderating effects by the 'PERMCOP' ('Managerial Commitment to Integrated Employee Participation') variable were identified. These were in respect of the regressions, firstly, of 'PFNPAR' ('Perceived Extent of Financial Participation', independent variable) and 'ATTCOM' ('Organisational Commitment', dependent variable) and, secondly, of 'PPSAFE' ('Perceived Extent of Participation in Safety-Related Decision-Making', independent variable) and

'GWDSAT' ('Satisfaction With Participation in Work-Related Decision-Making', dependent variable).

These findings thus provided support for the proposition that perceived managerial commitment to participation programmes may moderate the effects of such schemes. Further, these findings suggested that managerial commitment to participation may exert a moderating effect on the relationship between employee's perceived extent of participation and satisfaction therewith, as well as on the relationship between perceived extent of participation and job satisfaction.

13.4 THE DEVELOPMENT AND TESTING OF A PATH MODEL OF INTEGRATED EMPLOYEE PARTICIPATION

13.4.1 THE DEVELOPMENT OF THE PATH MODEL

This section describes the development of the path model of integrated employee participation. After its derivation, the model was tested longitudinally (i.e. on the data from both surveys), to assess its explanatory utility over time. Path analytical techniques were employed for testing the model, and the results thereof will be reported in section 13.4.2.

In developing a path model, it was decided to integrate the previous theory-building commentaries and empirical research findings from the literature, with the observations from the explanatory and exploratory research findings of the first survey of this study. This was because it was at this time that the model was first capable of being developed in a testable form, from data collected in the research. It was thus intended to generate a model of 'integrated employee participation' that would incorporate as many of the variables measured in this study as possible.

However note was also taken of the comments of Li (1975). He stated that in constructing path models, and in formulating hypotheses relating thereto, the principle of parsimony should be applied. That is, if there are several possible explanations for a phenomenon, then the one with the least number of factors or assumptions should be chosen. A study of

twenty variables may therefore be no more enlightening or fruitful than a study of ten variables. It was decided to adhere to this principle by:

- controlling for demographic and personality factors in the model (i.e. by treating them as exogenous to the path system, but 'controlling' for their effect on the dependent variables in each equation);
- excluding 'Organisational Commitment' from the model, due to it's high correlation with 'Job Satisfaction' scores; and
- combining three 'performance' variables ('SELPERF', 'SUPPERF', and 'PRSTAY') into one 'Consolidated Employee Performance' variable ('GRNPERF'). It was also noted that these variables correlated with each other (see appendix C), and this further supported the decision to consolidate them into one variable.

It was felt that the resulting simplification of the path model would provide greater clarity and meaning to the subsequent test results. Further, it could be argued that the 'demographic' and 'personality' factors of individual employees were not within the specific control of the organisation. Thus by controlling for these items in the model, added focus was placed on those remaining variables that could be controlled and 'manipulated' by management: their commitment to participation, the degree of participation provided, and the managerial control system factors.

As noted by Buchko, the purpose of modelling relationships in this manner was to:

> '... identify the direction and magnitude of effects of a series of determining variables on a dependent variable. The hypothesised model is written as a series of structural equations, which represent the causal processes presumed to be operating among the specified variables. These equations are then evaluated through regression techniques to derive estimates of the model's parameters.' (1993, p 638)

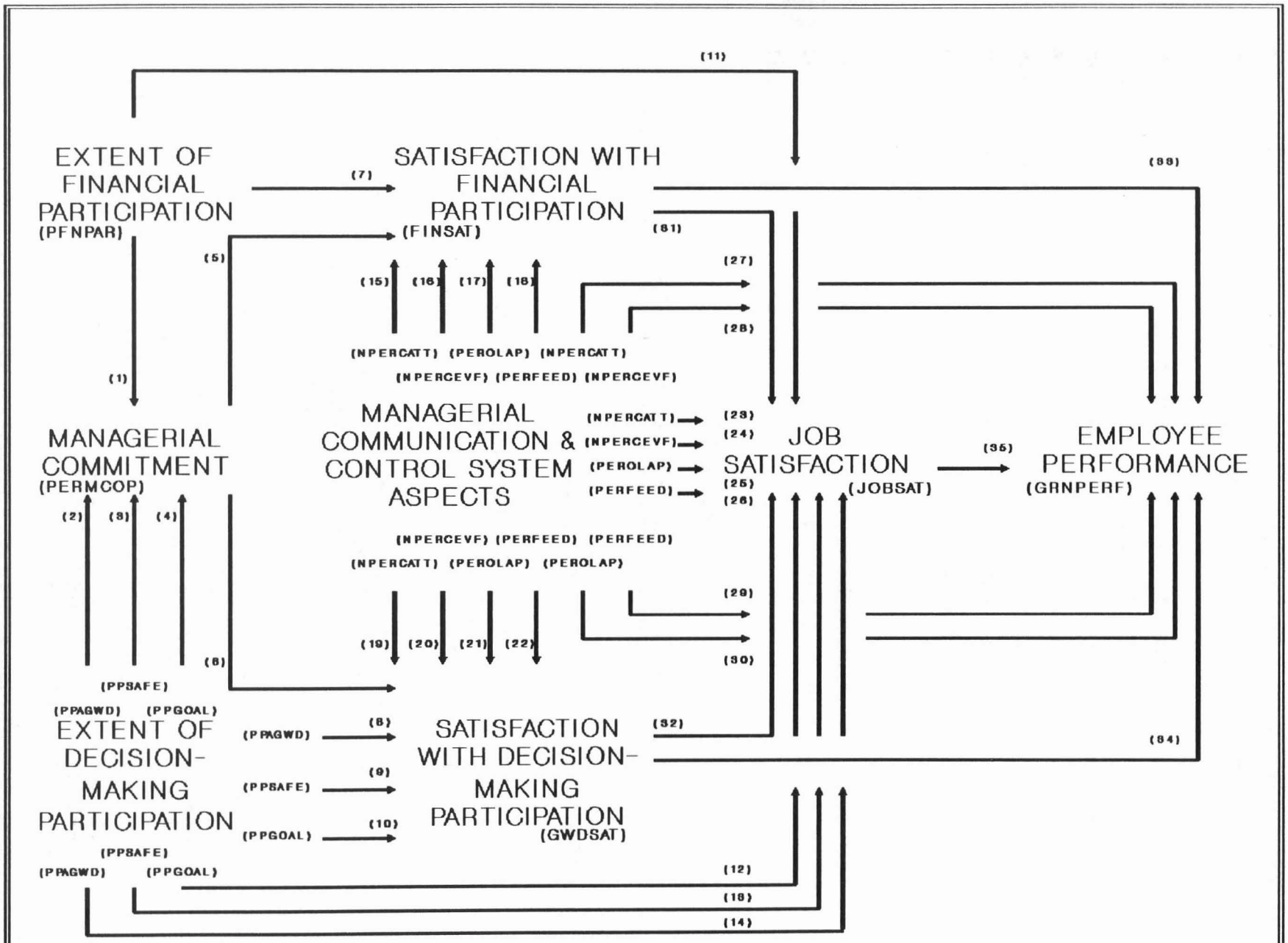

Figure 13.1: A Path Model of Integrated Employee Participation

The model developed in this case is presented in figure 13.1. The structural equations expressing the relationships therein are presented in table 13.11. As discussed above, it was decided to exclude biographical and personality variables from the path model, but to 'control' for their effects on each dependent variable in the model. Thus additional terms ('DEMO' and 'PERS') were introduced into each structural equation, to represent variations due to these factors. Within the regression procedures to test the model, these 'personality' and 'demographic' variables thus required inclusion as 'controlled' independent variables.

Each structural equation also included a residual variance term, indicating the amount of the variance not explained by the independent variables.

Table 13.11

Path Model: Structural Equations

Equation 1:
PERMCOP = p1(PFNPAR) + p2(PPAGWD) + p3(PPSAFE) + p4(PPGOAL) + p(DEMO) + p(PERS) + Residual

Equation 2:
FINSAT = p7(PFNPAR) + p5(PERMCOP) + p15(NPERCATT) + p16(NPERCEVF) + p17(PEROLAP) + p18(PERFEED) + p(DEMO) + p(PERS) + Residual

Equation 3:
GWDSAT = p6(PERMCOP) + p8(PPAGWD) + p9(PPSAFE) + p10(PPGOAL) + p19(NPERCATT) + p20(NPERCEVF) + p21(PEROLAP) + p22(PERFEED) + p(DEMO) + p(PERS) + Residual

Equation 4:
JOBSAT = p11(PFNPAR) + p31(FINSAT) + p14(PPAGWD) + p13(PPSAFE) + p12(PPGOAL) + p32(GWDSAT) + p23(NPERCATT) + p24(NPERCEVF) + p25(PEROLAP) + p26(PERFEED) + p(DEMO) + p(PERS) + Residual

Equation 5:
GRNPERF = p33(FINSAT) + p34(GWDSAT) + p27(NPERCATT) + p28(NPERCEVF) + p30(PEROLAP) + p29(PERFEED) + p35(JOBSAT) + p(DEMO) + p(PERS) + Residual

The remainder of this section describes the rationale behind the inclusion of the independent variables in each of the structural equations.

Equation 1 stated the hypothesised positive relationships between 'PERMCOP' ('Perceived Managerial Commitment to Integrated Employee Participation', dependent variable) and the 'perceived extent of participation' independent variables:

- 'PFNPAR' ('Perceived Extent of Financial Participation');
- 'PPAGWD' ('Perceived Extent of Participation in General Work-Related Decision-Making');
- 'PPSAFE' ('Perceived Extent of Participation in Safety-Related Decision-Making'); and
- 'PPGOAL' ('Perceived Extent of Participation in Work Target Setting').

In the path model, these associations were represented by the paths labelled (1), (2), (3) and (4), respectively. These relationships were incorporated in the model to reflect the proposition that management's extent of commitment to employee participation schemes was likely to be predicted by the extent of involvement offered to employees within the programmes. Also, if management perceived that the participation programmes were merely 'token' in nature, they might have been less committed to supporting them (Klein, 1987).

Equation 2 stated the hypothesised positive relationships between 'FINSAT' ('Satisfaction With Financial Participation', dependent variable) and the independent variables:

- 'PFNPAR' ('Perceived Extent of Financial Participation');
- 'PERMCOP' ('Perceived Managerial Commitment to Integrated Employee Participation'); and
- all of the 'managerial communication and control system' variables, i.e. 'NPERCATT' ('Perceived Attainability of Employee Goals'), 'NPERCEVF' ('Perceived Fairness of Supervisory Evaluation'), 'PEROLAP' ('Perceived Extent of Overlap of Employee's Assigned Areas of Responsibility and Control'), and 'PERFEED' ('Perceived Extent of Feedback Relating to Employee's Performance').

In the path model, these associations were represented by the paths labelled (7), (5), (15), (16), (17) and (18), respectively. An association between employees' perceived extent of financial participation and their satisfaction therewith (path number 7) has been previously established by researchers including Blanchflower (1991), Buchko (1993), and Klein (1987). Managerial commitment towards employee participation has also been proposed (Kelly and Kelly, 1990; Klein, 1987) to impact on employee attitudes towards involvement programmes (as represented by path number 5).

The 'managerial communication and control system' aspects were also included as independent variables in this equation, to reflect their proposed impact on satisfaction with participation (Hopwood, 1976). These relationships were represented by path numbers 15, 16, 17 and 18.

In addition to the support for the inclusion of these variables from within the literature, the previously-reported exploratory regression analysis in section 13.2.1, above, indicated that 'PFNPAR', 'PERMCOP', and 'NPERCEVF' scores were all plausible 'predictors' of 'FINSAT' scores. There was thus support from within this study for inclusion of most of the independent variables of this equation.

Equation 3 stated the hypothesised positive relationships between 'GWDSAT' ('Satisfaction With Participation in Work-Related Decision-Making', dependent variable) and the independent variables:

- 'PERMCOP' ('Perceived Managerial Commitment to Integrated Employee Participation');
- the 'perceived extent of decision-making participation' variables, i.e. 'PPAGWD' ('Perceived Extent of Participation in General Work-Related Decision-Making'), 'PPSAFE' ('Perceived Extent of Participation in Safety-Related Decision-Making'), and 'PPGOAL' ('Perceived Extent of Participation in Work Target Setting'); and
- the 'managerial communication and control system' variables, i.e. 'NPERCATT' ('Perceived Attainability of

Employee Goals'), 'NPERCEVF' ('Perceived Fairness of Supervisory Evaluation'), 'PEROLAP' ('Perceived Extent of Overlap of Employee's Assigned Areas of Responsibility and Control'), and 'PERFEED' ('Perceived Extent of Feedback Relating to Employee's Performance').

In the path model, these associations were represented by the paths labelled (6), (8), (9), (10), (19), (20), (21) and (22) respectively. An association between employees' perceived extent of decision-making participation and their satisfaction therewith (path numbers 8, 9 and 10) has been proposed in the literature (Alutto and Acito, 1974; Ivancevich, 1979; Wagner and Rosen, 1985). Managerial commitment towards employee participation was proposed, above, to impact on employee attitudes towards involvement programmes (represented here by path number 6).

The 'managerial communication and control system' aspects were also included as 'predictors' in this equation. As proposed by Hopwood (1976), employee attitudes may be affected by these factors. The relationships were represented by path numbers 19, 20, 21 and 22.

In addition to the support for the inclusion of these variables from within the literature, the previously-reported exploratory regression analysis in section 13.2.2, above, indicated that 'PPAGWD', 'PPSAFE', 'PPGOAL', AND 'PERMCOP' scores were all plausible 'predictors' of 'GWDSAT' scores. There was thus support from within this study for inclusion of most of the independent variables of this equation.

Equation 4 stated the hypothesised positive relationships between 'JOBSAT' ('Job Satisfaction', dependent variable) and the independent variables:

- 'PFNPAR' ('Perceived Extent of Financial Participation');
- 'FINSAT' ('Satisfaction With Financial Participation');
- the 'perceived extent of decision-making participation variables, i.e. 'PPAGWD' ('Perceived Extent of Participation in General Work-Related Decision-Making'),

'PPSAFE' ('Perceived Extent of Participation in Safety-Related Decision-Making'), and 'PPGOAL' ('Perceived Extent of Participation in Work Target Setting');

- 'GWDSAT' ('Satisfaction With Participation in Work-Related Decision-Making'); and
- the 'managerial communication and control system' variables, i.e. 'NPERCATT' ('Perceived Attainability of Employee Goals'), 'NPERCEVF' ('Perceived Fairness of Supervisory Evaluation'), 'PEROLAP' ('Perceived Extent of Overlap of Employee's Assigned Areas of Responsibility and Control'), and 'PERFEED' ('Perceived Extent of Feedback Relating to Employee's Performance').

In the path model, these associations were represented by the paths labelled (11), (31), (14), (13), (12), (32), (23), (24), (25) and (26), respectively.

A distinction between employees' 'job satisfaction' and their 'satisfaction with participation' has been established by a number of researchers (e.g. Buchko, 1993; Klein, 1987). This model thus proposed that job satisfaction was affected by both the perceived extent of financial participation (path number 11) and by satisfaction with the financial involvement scheme (path number 31). Similarly, the model proposed that job satisfaction was affected by employees' perceived extent of decision-making participation (path numbers 12, 13 and 14) and by satisfaction with decision-making involvement (path number 32).

As in previous equations, the 'managerial communication and control system' aspects were included as 'predictors'. These relationships were represented by path numbers 23, 24, 25 and 26. Thus it was proposed that these factors would significantly affect all behavioural outcome variables of the model.

The exploratory regression analysis in section 13.2.4, above, indicated that 'PPAGWD', 'PPGOAL', 'NPERCATT' AND 'NPERCEVF' scores were all plausible 'predictors' of 'JOBSAT' scores. Also, the explanatory research findings had supported positive relationships between job satisfaction and:

- employees' perceived extent of financial participation ('PFNPAR') in hypothesis 1;
- employees' perceived extent of participation in general work-related decision making ('PPAGWD') in hypothesis 2;
- employees' perceived extent of participation in work target setting ('PPGOAL') in hypothesis 3; and
- employees' participation in safety-related decision-making ('PPSAFE'), also in hypothesis 3.

There was thus considerable support from within this study for inclusion of these variables in this equation.

Equation 5 stated the hypothesised positive relationships between 'GRNPERF' ('Consolidated Employee Performance', dependent variable) and the independent variables:

- 'FINSAT' ('Satisfaction With Financial Participation');
- 'GWDSAT' ('Satisfaction With Participation in Work-Related Decision-Making');
- the 'managerial communication and control system' variables, i.e 'NPERCATT' ('Perceived Attainability of Employee Goals'), 'NPERCEVF' ('Perceived Fairness of Supervisory Evaluation'), 'PEROLAP' ('Perceived Extent of Overlap of Employee's Assigned Areas of Responsibility and Control'), and 'PERFEED' ('Perceived Extent of Feedback Relating to Employee's Performance'); and
- 'JOBSAT' ('Job Satisfaction').

In the path model, these associations were represented by the paths labelled (33), (34), (27), (28), (30), (29) and (35), respectively.

The model thus proposed that employees' performance would be influenced by their satisfaction with the individual elements of the integrated participation schemes in effect at the mine,

i.e. by both satisfaction with financial participation (path 33), and by satisfaction with decision-making participation (path 34). These were similar to elements of a path model proposed and tested by Buchko (1993), who proposed associations between E.S.O.P. satisfaction, perceived influence from share ownership, turnover intention, and actual employee turnover.

A hypothesised relationship between job satisfaction and employee performance was also included (path number 35). This was consistent with the proposals of Steers and Porter (1991), as discussed in chapter 6. Further, a negative relationship between employees' satisfaction with participation and their turnover was established by Cotton and Tuttle (1986). There was thus support from within the literature for the inclusion of these variables within this equation.

Finally, the four 'managerial communication and control system' variables were included as 'predictors' of employee performance. Theoretical propositions supporting such inclusions have been made by Hopwood (1976) and Otley (1978). These relationships were represented by path numbers 27, 28, 29 and 30.

The exploratory regression analyses in sections 13.2.5, 13.2.6, and 13.2.7 above, indicated that 'FINSAT', 'GWDSAT', 'NPERCEVF', 'PERFEED' and 'JOBSAT' scores were plausible 'predictors' of various of the constituent scores of the 'GRNPERF' measure. Also, the explanatory research findings had supported positive associations between:

- job satisfaction and employees' self-rated performance ('SELPERF') in hypothesis 4;
- job satisfaction and employees' supervisor-rated performance ('SUPPERF'), also in hypothesis 4; and between
- job satisfaction and employees' propensity to remain ('PRSTAY'), in hypothesis 5.

There was thus further support from within this study for inclusion of these variables in this equation.

This path model thus integrated theory-building propositions and empirical findings, from both prior research and the first survey of this study. The next section will report the empirical results of testing this model longitudinally, i.e. on both the first and second survey data-sets.

13.4.2 THE RESULTS OF EMPIRICALLY TESTING THE PATH MODEL

This section presents the results of testing the path model. The results are briefly interpreted in this chapter, but a detailed discussion thereof will be provided in chapter 15.

As discussed in section 10.9.7 of chapter 10, the path model tested in this study was recursive in nature, i.e. it did not incorporate causal feedback loops or reciprocal causation between the variables. Thus, as explained in chapter 10, this model could be tested using ordinary regression equations. The five structural equations representing the underlying relationships of the model were therefore analysed in a series of stepwise multiple regression procedures. In each case variables were added to the regression equation, in a stepwise manner, in the following sequence:

- the biographical variables of 'married status', 'Age', ' Home Language', 'Education Level', 'Work Site', 'Attendance at Company Orientation Course', 'Tenure in Years' and 'Level in the Hierarchy', and the personality variables 'Need For Independence', 'Work Locus of Control' and 'Authoritarianism' were initially introduced into the regression as a group of independent variables, thus controlling for the effects of these items throughout the analysis;
- the initial coefficient of determination ('r-squared') of the overall equation (i.e. prior to the introduction of the path variables) was then computed;
- the path variables (i.e. the hypothesised 'predictors' of this particular dependent variable) were then introduced into the regression, and the final coefficient of

determination for the overall equation was computed. The difference between the initial and final coefficients of determination for the regression indicated the degree of explanatory power of that part of the path model. The significance of this key indicator was determined by the 'F-value' test for the path variables' betas (see section 12.4.3 of chapter 12 for a detailed description of this test). The path coefficients were determined from the betas of this final regression.

The path model was tested on the entire samples from both surveys. It was also tested on the strata for each of the three levels of the organisational hierarchy: management, supervisors and artisans ('category A'), and unskilled and semi-skilled workers ('category B'). The procedure adopted for the hierarchical analysis of each regression was as described above, excepting that the 'level in the hierarchy' variable was excluded from the 'controlled' independent variables in the first step. This was because its value was, by definition, identical for all respondents within each stratum.

The results of the path analysis regression procedures undertaken on the data arising from both surveys are reported, in detail, in appendix E. Every report provides the following information in respect of the regressions performed at each step of the procedure:

- the coefficient of determination ('r-squared');
- the change in the coefficient of determination from that computed before the addition of the latest predictor variable/s;
- the 'F-value', used to test the null hypothesis that the parameters of the regression solution were not significantly different from zero (for parsimony, reported in respect of the first survey only);
- the resulting significance of the overall regression;
- the 'beta' partial regression coefficients, and the standard errors (first survey only), for each 'predictor' variable inserted into the regression equation;
- the statistical level of significance of each 'beta';

- the 'F-value', used to test the null hypothesis that the increase in 'r-squared' arising from the introduction of the path variables into the regression was not significantly different from zero (reported in respect of the first survey only); and
- the resulting significance of the change in 'r-squared' arising from the introduction of the path variables.

Supervisor-rated employee performance ('SUPPERF') was not measured in the second survey. Therefore the 'GRNPERF' consolidated 'employee performance' scores for the second survey excluded scores for this variable. This was unavoidable, as previously discussed. It was nevertheless decided to include the 'GRNPERF' variable (excluding the 'SUPPERF' component) in the second analysis, due to the exploratory nature of this section of the research. Nevertheless comparisons between the findings of the two surveys, relating to the 'GRNPERF' variable, should be made with caution.

Griffin (1977) noted the following assumptions necessary for path analytic procedures to yield unbiased results:

- the data is homoscedastic;
- the independent variables operate on the dependent variable in a linear and additive manner; and
- the error terms are independent of each other and of the regressor variables.

Accordingly, before testing the path model, White's (1980) test was performed to satisfy the researcher that path analytic procedures were appropriate for this data. Hall et al (1990) stated:

> 'White argues that the chi-squared test is a general test for model misspecification, since the null hypothesis underlying the test assumes that the errors are both homoscedastic and independent of the regressors and that the linear specification of the model is correct. Failure on any one or more of these conditions could lead to a significant test statistic. Conversely a nonsignificant

test statistic is very reassuring since it implies that none of the three conditions is violated'
(Hall et al, 1990).

The results of performing White's (1980) Heteroscedasticity Test are reported in table 13.12.

Table 13.12

Results: White's Heteroscedasticity Test

EQUATION NUMBER	CHI-SQUARE	D.F.	PROBABILITY
First Survey's Data:			
1	144.3417	133	0.2366
2	154.2461	168	0.7689
3	189.9497	207	0.7965
4	238.4035	250	0.6904
5	191.7773	187	0.3900
Second Survey's Data:			
1	127.9167	132	0.5843
2	129.0585	167	0.9868
3	189.7848	206	0.7846
4	132.2839	233	0.5009
5	179.1387	186	0.6276

The results in table 13.12 reflect that the null hypothesis underlying White's (1980) test was rejected in all equations, in both surveys. This was therefore 'very reassuring' (Hall et al, 1990), since it implied that all of the three assumptions discussed above had not been violated.

13.4.2.1 The Results of Testing the Model on the Whole Sample

This section reports on the results of testing the path model on the entire samples from both the first and second surveys.

13.4.2.1.1 First survey results: whole sample

Appendices E-1(A to E) contain the reports for each of the stepwise multiple regression analyses, which comprised the tests of the path model on the whole sample. The structural equations derived from the tests on the first survey's data are reported in table 13.13. Figure 13.2 presents the original

path model, with the resultant beta weights for the path variables from this test inserted therein.

Table 13.13

Path Analysis Structural Equations:
Whole Sample (First Survey)
(n = 525)

Equation 1:
PERMCOP = 0.610**(PFNPAR) + 0.155(PPAGWD) + 0.624**(PPSAFE)
+ 0.506**(PPGOAL)
(r-sq = 0.451**)

Equation 2:
FINSAT = 0.468**(PFNPAR) + 0.177**(PERMCOP) -
0.031(NPERCATT) - 0.080#(NPERCEVF) -
0.016(PEROLAP) + 0.047(PERFEED)
(r-sq = 0.527**)

Equation 3:
GWDSAT = 0.006(PERMCOP) + 0.112**(PPAGWD) + 0.060@(PPSAFE)
+ 0.078**(PPGOAL) + 0.010(NPERCATT) +
0.049#(NPERCEVF) - 0.023(PEROLAP) - 0.008(PERFEED)
(r-sq = 0.301**)

Equation 4:
JOBSAT = 0.135(PFNPAR) + 0.269*(FINSAT) + 0.514**(PPAGWD) +
0.157(PPSAFE) - 0.091(PPGOAL) - 0.230(GWDSAT) +
0.207#(NPERCATT) + 0.390**(NPERCEVF) +
0.097(PEROLAP) + 0.117(PERFEED)
(r-sq = 0.351**)

Equation 5:
GRNPERF = 0.078(FINSAT) - 0.012(GWDSAT) - 0.055(NPERCATT) +
0.290**(NPERCEVF) + 0.180@(PEROLAP) +
0.175@(PERFEED) + 0.192**(JOBSAT)
(r-sq = 0.268**)

** = p < 0.001
* = p < 0.01
# = p < 0.05
@ = p < 0.10

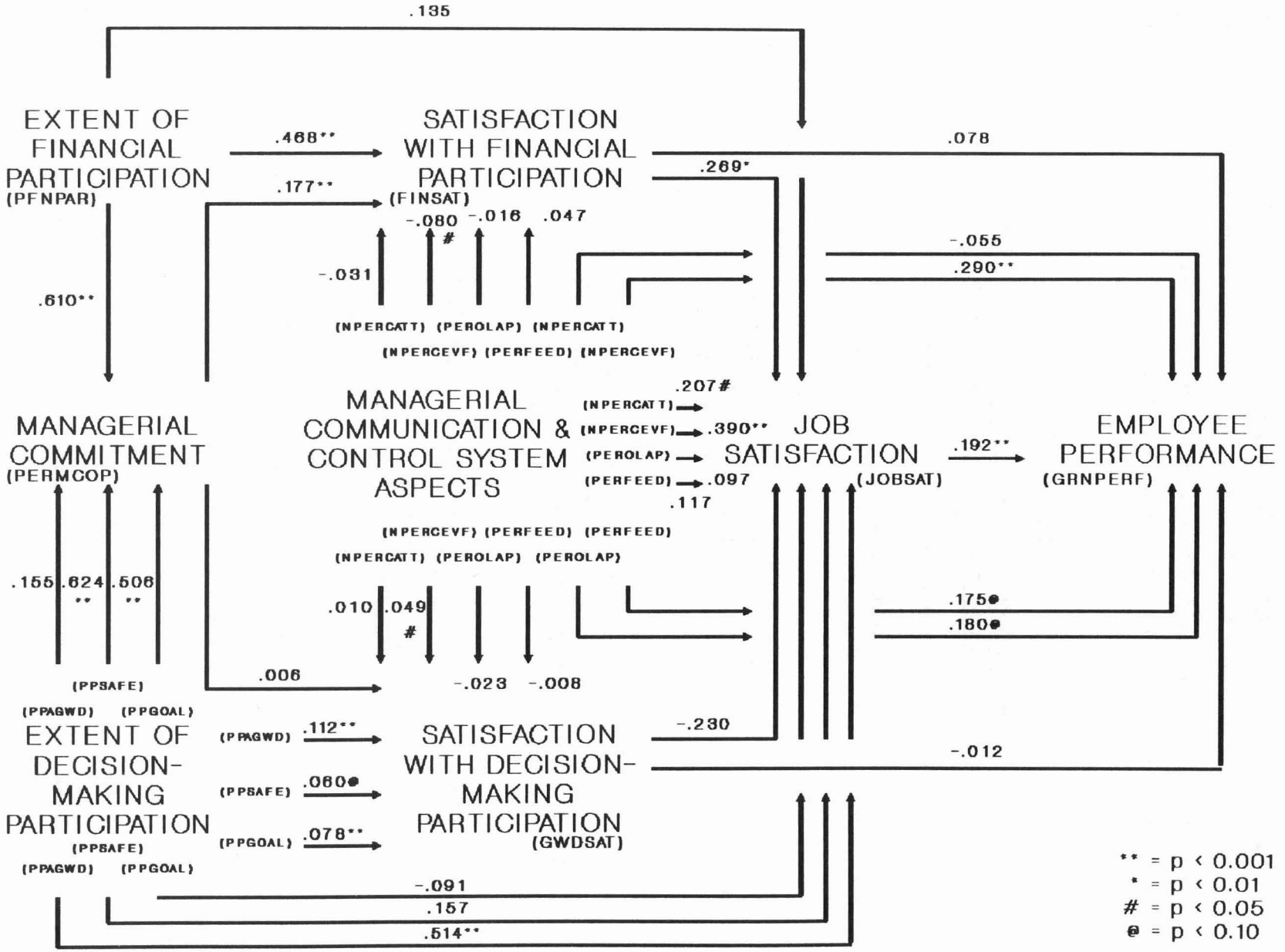

Figure 13.2: Path Analysis Results: Whole Sample (First Survey) (n = 525)

13.4.2.1.2 Second survey results: whole sample

The structural equations derived from the tests on the second survey's data are reported in table 13.14. Figure 13.3 presents the original path model, with the resultant beta weights for the path variables from this test inserted therein.

Table 13.14

Path Analysis Structural Equations:
Whole Sample (Second Survey)
(n = 234)

Equation 1:
PERMCOP = 0.594**(PFNPAR) + 0.106(PPAGWD) + 0.711*(PPSAFE) + 0.587**(PPGOAL)
(r-sq = 0.532**)

Equation 2:
FINSAT = 0.676**(PFNPAR) + 0.119**(PERMCOP) + 0.068(NPERCATT) - 0.014(NPERCEVF) + 0.069(PEROLAP) - 0.059(PERFEED)
(r-sq = 0.613**)

Equation 3:
GWDSAT = 0.015(PERMCOP) + 0.187**(PPAGWD) + 0.061(PPSAFE) + 0.071*(PPGOAL) - 0.047(NPERCATT) + 0.063@(NPERCEVF) + 0.055(PEROLAP) - 0.036(PERFEED)
(r-sq = 0.470**)

Equation 4:
JOBSAT = 0.170(PFNPAR) + 0.290#(FINSAT) + 0.114(PPAGWD) - 0.177(PPSAFE) + 0.047(PPGOAL) + 0.577#(GWDSAT) + 0.067(NPERCATT) + 0.488**(NPERCEVF) + 0.288@(PEROLAP) - 0.112(PERFEED)
(r-sq = 0.478**)

Equation 5:
GRNPERF = 0.383**(FINSAT) + 0.179(GWDSAT) - 0.078(NPERCATT) + 0.164(NPERCEVF) - 0.098(PEROLAP) + 0.165(PERFEED) + 0.052(JOBSAT)
(r-sq = 0.283**)

** = p < 0.001
* = p < 0.01
# = p < 0.05
@ = p < 0.10

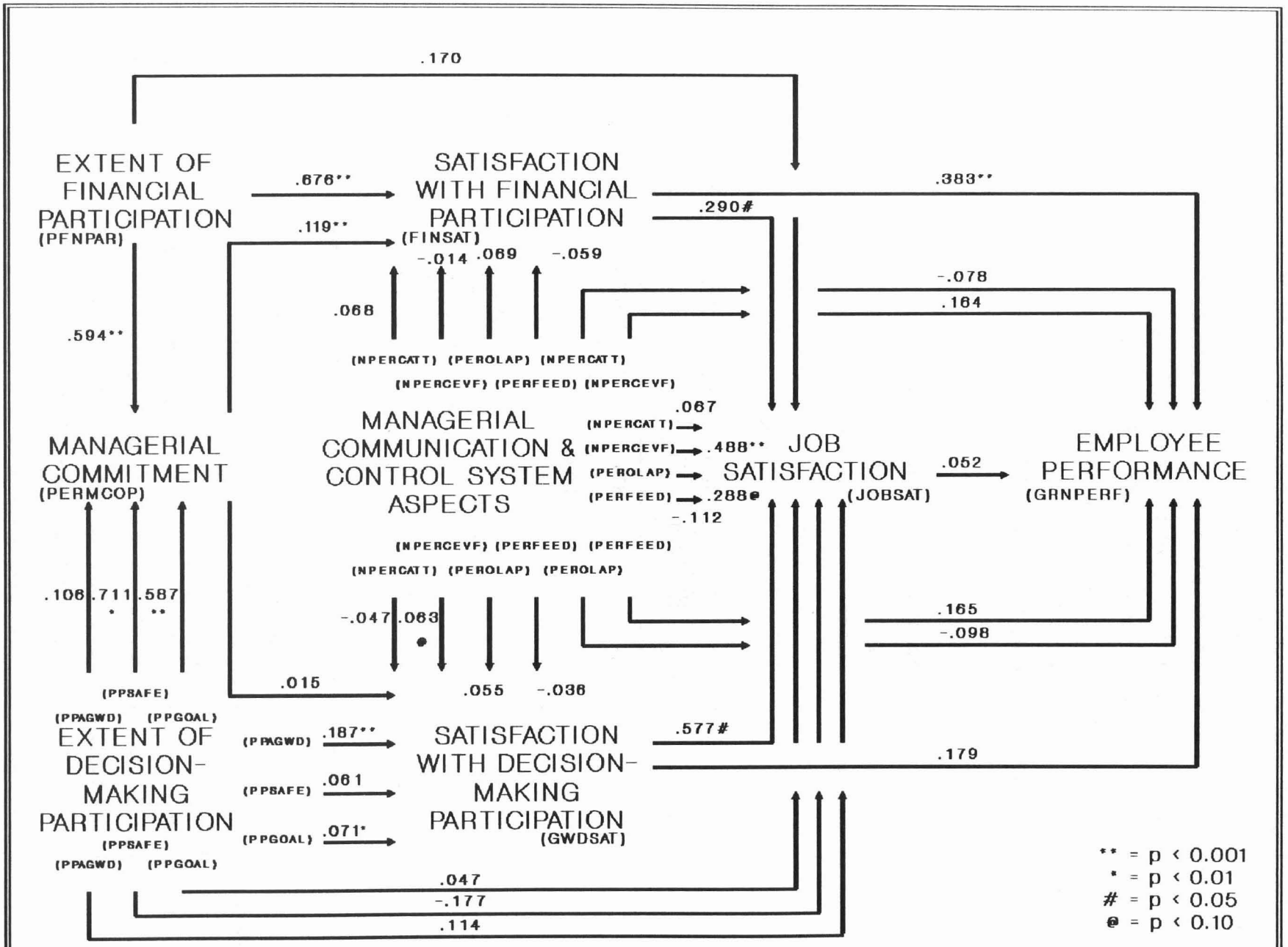

Figure 13.3: Path Analysis Results: Whole Sample (Second Survey) (n = 234)

Buchko (1993, p 648) stated that the key statistics in path modelling of this type were the changes in the overall coefficients of determination arising in the last step of each regression procedure. The significance of these 'changes in r-squared' are determined by the 'F-value' tests for the betas of the variables introduced in the final step of the procedure (see section 12.4.3 of chapter 12). These 'changes in r-squared' indicated the explanatory power of the overall path model.

Table 13.15 summarises the 'changes in r-squared' (and the significance thereof) in each stepwise regression procedure, for this testing of the path model on the whole sample.

Table 13.15

Path Analysis Test Results: Whole Sample
(1st and 2nd Surveys)
Summary: Explanatory Power of Structural Equations

EQUATION NUMBER	DEPENDENT VARIABLE	CHANGE IN R-SQUARED (1st Survey) (n = 525)	CHANGE IN R-SQUARED (2nd Survey) (n = 234)
1	PERMCOP	0.379 **	0.405 **
2	FINSAT	0.453 **	0.503 **
3	GWDSAT	0.228 **	0.312 **
4	JOBSAT	0.249 **	0.349 **
5	GRNPERF	0.173 **	0.199 **

** = $p < 0.001$

Table 13.15 reflects that the model had substantial explanatory power, when applied to the whole sample. The total change in the explained variance of the dependent variables, due to the independent variables of the respective equations, was quite high, ranging from 17.3% to 45.3% in the first survey, and from 19.9% to 50.3% in the second survey. All 'changes in r-squared' were significant ($p < 0.001$).

Of particular interest was the increase in the explanatory power of this model between the first and second surveys: the

changes in 'r-squared' for every equation were higher for the second data-set than for the first. This will be discussed further in chapter 15.

However it was noted that not all of the hypothesised relationships within the model had been found to be significant. Thus, despite its substantial explanatory power, there appeared to be a case for revising the model further. This will be discussed in chapter 15.

13.4.2.2 The Results of Testing the Model on the Management Stratum

This section reports on the results of testing the path model on the 'management' stratum of the samples from both the first and second surveys.

13.4.2.2.1 First survey results: management stratum

The structural equations derived from the tests on the first survey's data are reported in table 13.16. Figure 13.4 presents the original path model, with the resultant beta weights for the path variables for this test inserted therein.

13.4.2.2.2 Second survey results: management stratum

The structural equations derived from the tests on the second survey's data are reported in table 13.17. Figure 13.5 presents the original path model, with the resultant beta weights for the path variables from this test inserted therein.

Table 13.18 summarises the 'changes in r-squared' calculated in each stepwise regression procedure, for this testing of the path model on the management stratum.

Table 13.16

Path Analysis Structural Equations:
Management Stratum (First Survey)
(n = 46)

Equation 1:
PERMCOP = 0.583#(PFNPAR) - 1.202#(PPAGWD) + 0.444(PPSAFE)
+ 0.582#(PPGOAL)
(r-sq = .650**)

Equation 2:
FINSAT = 0.413**(PFNPAR) + 0.253**(PERMCOP) -
0.191(NPERCATT) - 0.039(NPERCEVF) - 0.014(PEROLAP)
- 0.025(PERFEED)
(r-sq = .754**)

Equation 3:
GWDSAT = - 0.025(PERMCOP) + 0.093(PPAGWD) - 0.020(PPSAFE) +
0.104(PPGOAL) + 0.073(NPERCATT) - 0.045(NPERCEVF)
- 0.033(PEROLAP) + 0.032(PERFEED)
(r-sq = .419)

Equation 4:
JOBSAT = - 0.012(PFNPAR) + 0.080(FINSAT) - 0.200(PPAGWD) -
0.357(PPSAFE) + 0.312(PPGOAL) - 1.405(GWDSAT) -
0.258(NPERCATT) + 0.543(NPERCEVF) + 0.321(PEROLAP)
- 0.624(PERFEED)
(r-sq = .598@)

Equation 5:
GRNPERF = - 0.097(FINSAT) - 0.180(GWDSAT) + 0.059(NPERCATT)
- 0.217(NPERCEVF) + 0.002(PEROLAP) +
0.166(PERFEED) + 0.438*(JOBSAT)
(r-sq = .435)

** = $p < 0.001$
# = $p < 0.05$

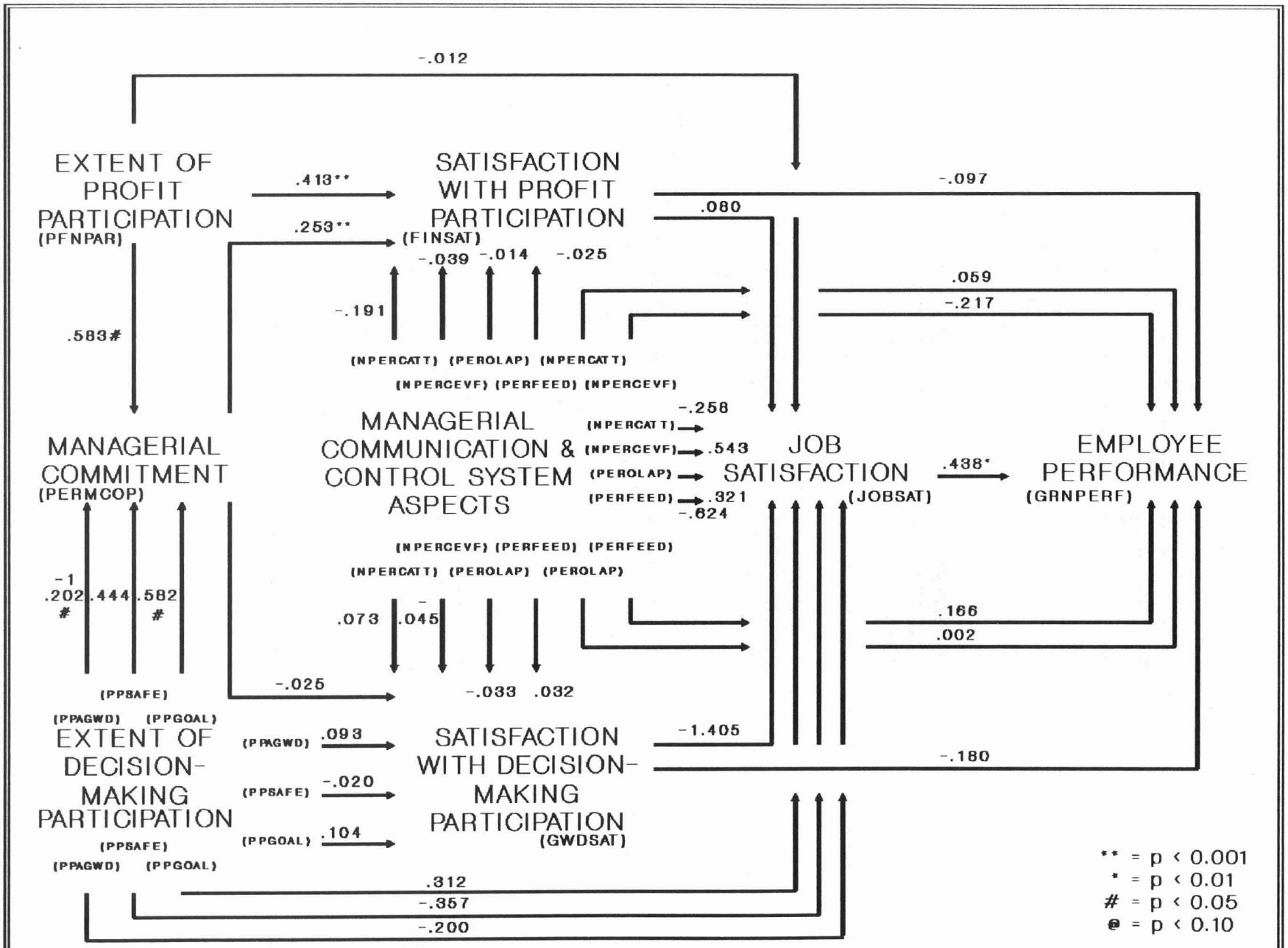

Figure 13.4: Path Analysis Results: Management Stratum (First Survey) (n = 46)

Table 13.17

Path Analysis Structural Equations:
Management Stratum (Second Survey)
(n = 44)

Equation 1:
PERMCOP = 0.446(PFNPAR) + 0.964@(PPAGWD) - 1.055@(PPSAFE) + 1.317*(PPGOAL)
(r-sq = 0.655**)

Equation 2:
FINSAT = 0.915**(PFNPAR) + 0.116(PERMCOP) - 0.166(NPERCATT) - 0.084(NPERCEVF) + 0.419@(PEROLAP) - 0.369#(PERFEED)
(r-sq = 0.810**)

Equation 3:
GWDSAT = 0.033(PERMCOP) + 0.182(PPAGWD) - 0.001(PPSAFE) + 0.091(PPGOAL) - 0.076(NPERCATT) - 0.082(NPERCEVF) + 0.122(PEROLAP) - 0.039(PERFEED)
(r-sq = 0.523)

Equation 4:
JOBSAT = - 0.348(PFNPAR) + 0.644@(FINSAT) + 0.302(PPAGWD) + 0.050(PPSAFE) + 0.347(PPGOAL) - 0.011(GWDSAT) + 0.065(NPERCATT) + 0.384(NPERCEVF) - 0.731@(PEROLAP) + 0.702#(PERFEED)
(r-sq = 0.810**)

Equation 5:
GRNPERF = - 0.188(FINSAT) + 0.769(GWDSAT) + 0.265(NPERCATT) + 0.126(NPERCEVF) + 0.053(PEROLAP) - 0.387(PERFEED) + 0.554*(JOBSAT)
(r-sq = 0.737**)

** = p < 0.001
* = p < 0.01
# = p < 0.05
@ = p < 0.10

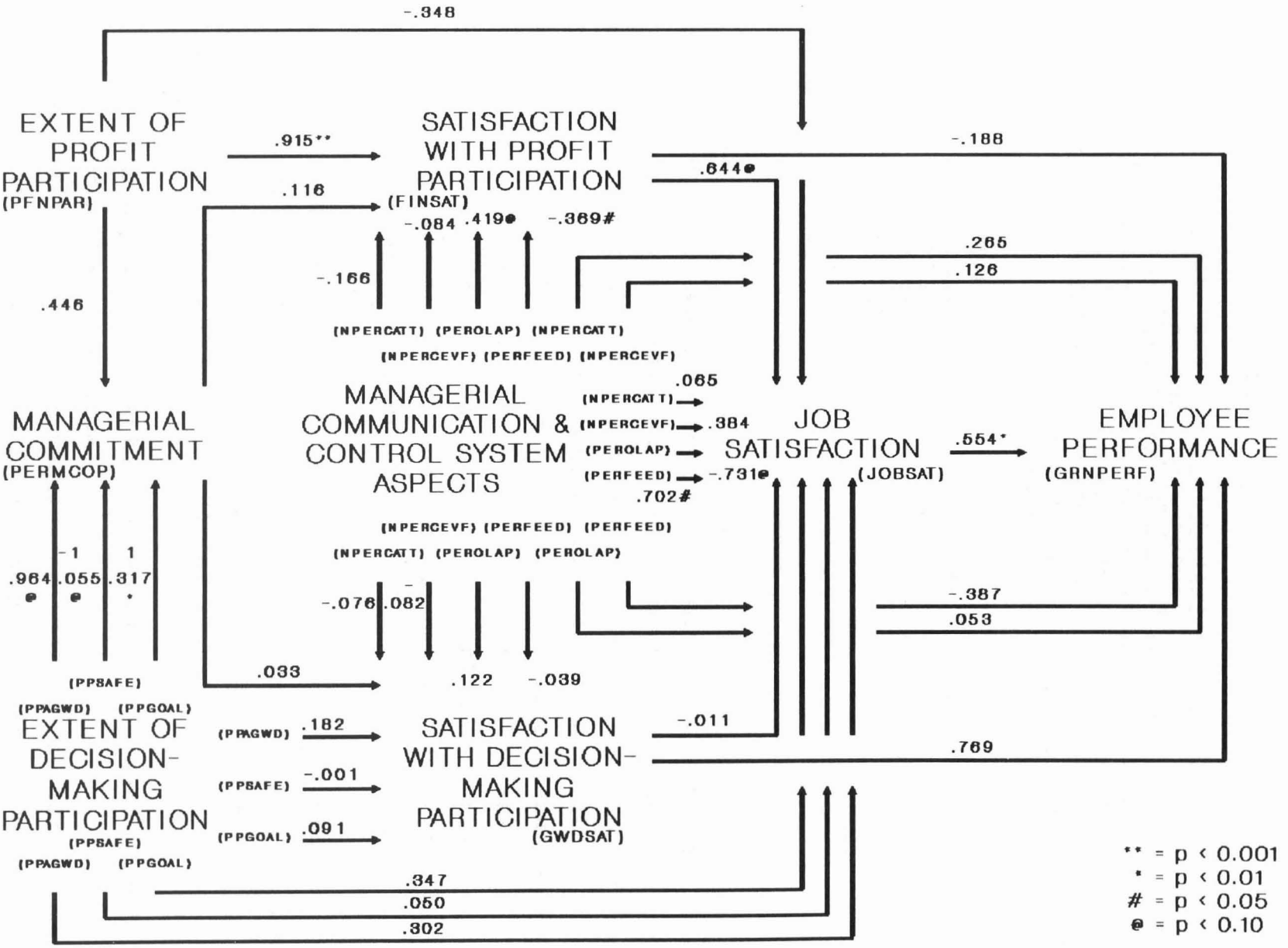

Figure 13.5: Path Analysis Results: Management Stratum (Second Survey) (n = 44)

Table 13.18

Path Analysis Test Results: Management Stratum
(1st and 2nd Surveys)
Summary: Explanatory Power of Structural Equations

EQUATION NUMBER	DEPENDENT VARIABLE	CHANGE IN R-SQUARED (1st Survey) (n = 46)	CHANGE IN R-SQUARED (2nd Survey) (n = 44)
1	PERMCOP	0.293 **	0.414 **
2	FINSAT	0.401 **	0.623 **
3	GWDSAT	0.250	0.310 @
4	JOBSAT	0.120	0.556 **
5	GRNPERF	0.233	0.419 **

** = p < 0.001
@ = p < 0.10

Table 13.18 reflects that the model had substantial explanatory power, when applied to the management stratum. The total change in the explained variance of the dependent variables, due to the independent variables of the respective equations, was quite high, ranging from 12.0% to 40.1% in the first survey, and from 31.0% to 62.3% in the second survey. It was also noted that, as for the tests on the whole sample, there was a substantial increase in the explanatory power of the model between the first and second surveys. This will be discussed further in chapter 15.

Once again, however, not all the hypothesised relationships in the model were found to be significant. There thus was a case for revising the model, for its application to this stratum. This will also be discussed in chapter 15.

13.4.2.3 The Results of Testing the Model on the Supervisors and Artisans Stratum

This section reports on the results of testing the path model on the supervisors and artisans ('Category A') stratum from both the first and second surveys.

13.4.2.3.1 First survey results: supervisors and artisans stratum

The structural equations derived from the tests on the second survey's data are reported in table 13.19. Figure 13.6 presents the original path model, with the resultant beta weights for the path variables from this test inserted therein.

Table 13.19

Path Analysis Structural Equations:
Supervisors and Artisans ('Category A') Stratum
(First Survey)
(n = 58)

Equation 1:
PERMCOP = 0.941**(PFNPAR) - 0.292(PPAGWD) + 0.966*(PPSAFE)
+ 0.830**(PPGOAL)
(r-sq = .802**)

Equation 2:
FINSAT = 0.606**(PFNPAR) + 0.126@(PERMCOP) +
0.378(NPERCATT) - 0.186(NPERCEVF) + 0.192(PEROLAP)
- 0.085(PERFEED)
(r-sq = .690**)

Equation 3:
GWDSAT = - 0.015(PERMCOP) + 0.090(PPAGWD) + 0.158@(PPSAFE)
+ 0.132#(PPGOAL) - 0.079(NPERCATT) -
0.010(NPERCEVF) + 0.006(PEROLAP) + 0.049(PERFEED)
(r-sq = .537*)

Equation 4:
JOBSAT = 0.476(PFNPAR) - 0.305(FINSAT) + 0.336(PPAGWD) -
0.517(PPSAFE) + 0.227(PPGOAL) + 0.501(GWDSAT) +
0.359(NPERCATT) + 0.370(NPERCEVF) +
0.552(PEROLAP) + 0.143(PERFEED)
(r-sq = .620*)

Equation 5:
GRNPERF = - 0.153(FINSAT) + 0.466(GWDSAT) - 0.215(NPERCATT)
+ 0.147(NPERCEVF) - 0.046(PEROLAP) +
0.436#(PERFEED) + 0.327**(JOBSAT)
(r-sq = .705**)

** = p < 0.001
* = p < 0.01
# = p < 0.05
@ = p < 0.10

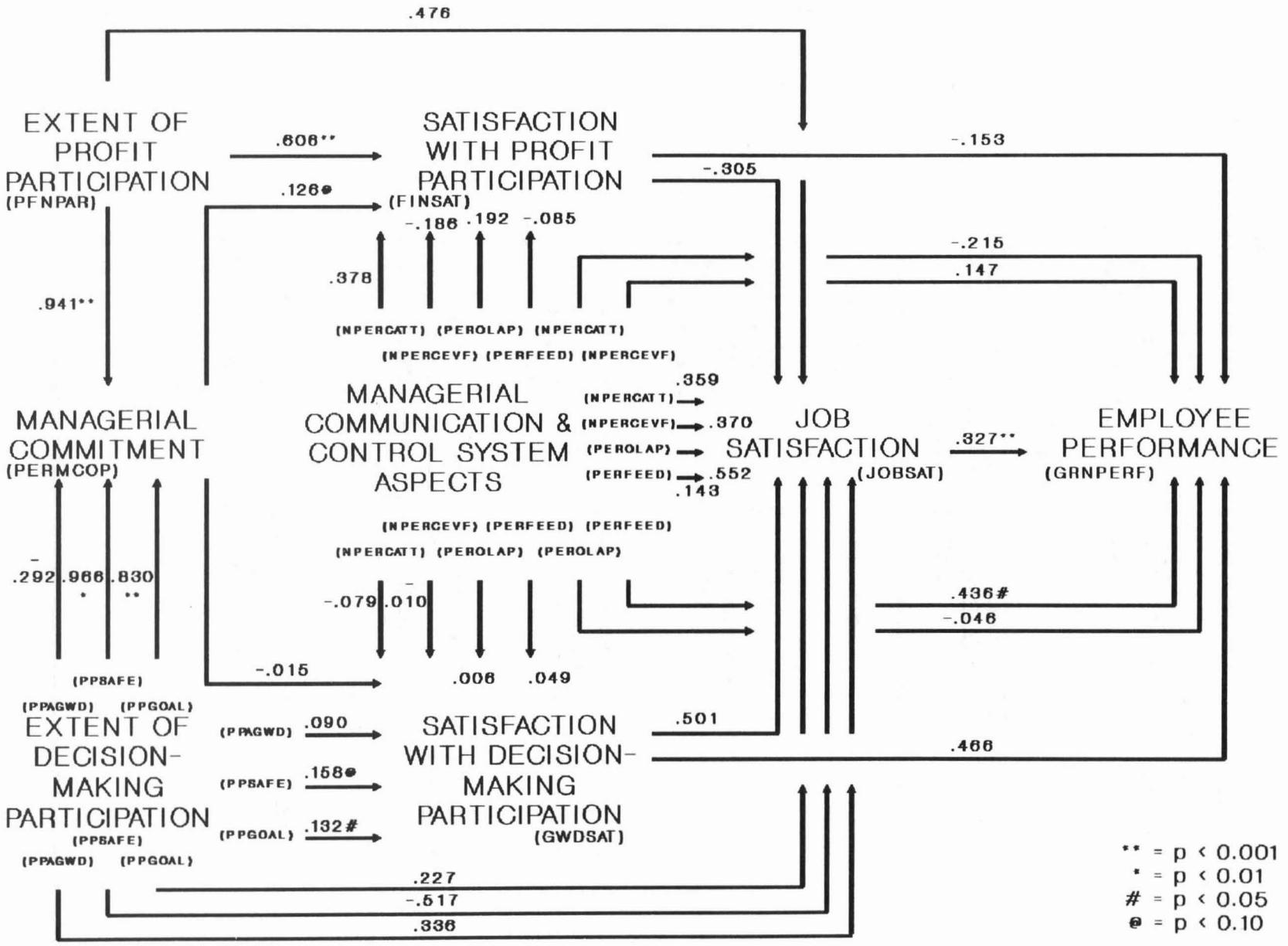

Figure 13.6: Path Analysis Results: Supervisors & Artisans Stratum (First Survey) (n = 58)

13.4.2.3.2 Second survey results: supervisors and artisans stratum

The structural equations derived from the tests on the second survey's data are reported in table 13.20. Figure 13.7 presents the original path model, with the resultant beta weights for the path variables inserted.

Table 13.20

Path Analysis Structural Equations:
Supervisors and Artisans ('Category A') Stratum
(Second Survey)
(n = 40)

Equation 1:
PERMCOP = 1.177**(PFNPAR) - 0.771(PPAGWD) + 1.351#(PPSAFE)
+ 0.598(PPGOAL)
(r-sq = 0.762**)

Equation 2:
FINSAT = 0.578**(PFNPAR) + 0.106(PERMCOP) +
0.467#(NPERCATT) - 0.390*(NPERCEVF) -
0.080(PEROLAP) + 0.009(PERFEED)
(r-sq = 0.853**)

Equation 3:
GWDSAT = - 0.040(PERMCOP) + 0.232@(PPAGWD) - 0.020(PPSAFE)
+ 0.060(PPGOAL) + 0.045(NPERCATT) +
0.135@(NPERCEVF) - 0.104(PEROLAP) + 0.063(PERFEED)
(r-sq = 0.643@)

Equation 4:
JOBSAT = 0.662(PFNPAR) - 0.403(FINSAT) + 0.365(PPAGWD) +
0.866(PPSAFE) + 0.189(PPGOAL) - 0.419(GWDSAT) +
0.234(NPERCATT) + 0.013(NPERCEVF) -
0.220(PEROLAP) + 0.067(PERFEED)
(r-sq = 0.654@)

Equation 5:
GRNPERF = 0.360(FINSAT) - 0.631(GWDSAT) - 1.050#(NPERCATT) -
0.955*(NPERCEVF) + 0.314(PEROLAP) +
0.749#(PERFEED) + 0.425#(JOBSAT)
(r-sq = 0.699*)

** = p < 0.001
* = p < 0.01
# = p < 0.05
@ = p < 0.10

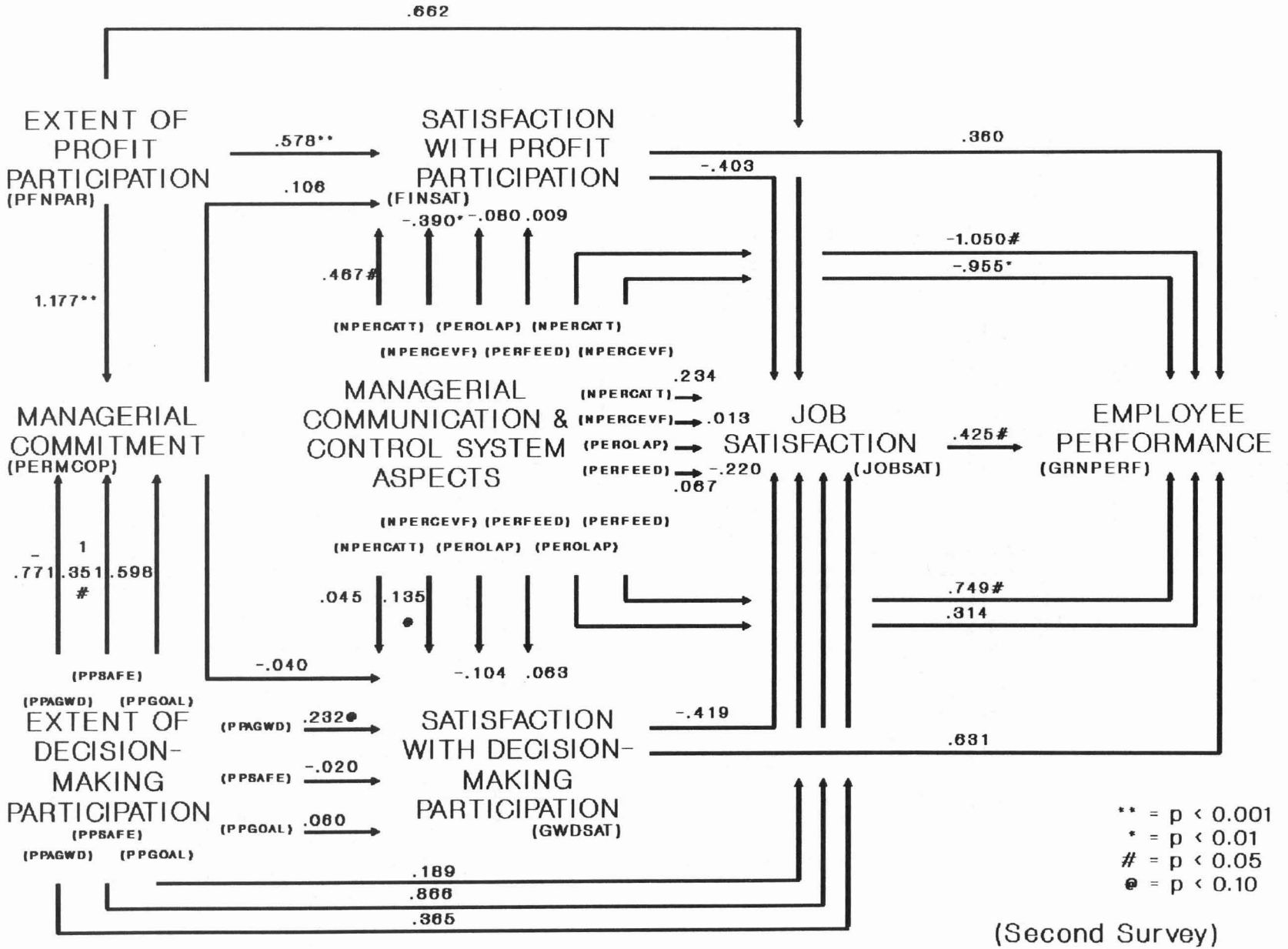

Figure 13.7: Path Analysis Results: Supervisors & Artisans Stratum

Table 13.21 summarises the 'changes in r-squared' calculated in each stepwise regression procedure, for this testing of the path model on the supervisors and artisans ('Category A') stratum.

Table 13.21

Path Analysis Test Results:
Supervisors and Artisans ('Category A') Stratum
(1st and 2nd Surveys)
Summary: Explanatory Power of Structural Equations

EQUATION NUMBER	DEPENDENT VARIABLE	CHANGE IN R-SQUARED (1st Survey) (n = 58)	CHANGE IN R-SQUARED (2nd Survey) (n = 40)
1	PERMCOP	0.474 **	0.353 **
2	FINSAT	0.456 **	0.444 **
3	GWDSAT	0.406 **	0.361 #
4	JOBSAT	0.346 *	0.303
5	GRNPERF	0.437 **	0.435 *

** = p < 0.001
* = p < 0.01
# = p < 0.05

Table 13.21 reflects that the model also had substantial explanatory power, when applied to the supervisors and artisans stratum. The total change in the explained variance of the dependent variables, due to the independent variables of the respective equations, was quite high, ranging from 34.6% to 47.4% in the first survey, and from 30.3% to 44.4% in the second survey. The explanatory power of the model appeared to be relatively stable between the two surveys: there were generally no substantial increases or decreases in the 'r-squared' statistics noted. The levels of significance of the 'changes in r-squared' were, however, lower for equations 4 and 5 in the second survey.

As noted in the whole sample and management-level tests, there was also an argument for revising the model, in its application to this stratum. This was because not all of the hypothesised relationships in the model had been empirically supported. This will be discussed further in chapter 15.

13.4.2.4 The Results of Testing the Model on the Unskilled and Semi-Skilled Stratum

This section reports on the results of testing the path model on the unskilled and semi-skilled ('category B') stratum from both the first and second surveys.

13.4.2.4.1 First survey results: unskilled and semi-skilled stratum

The structural equations derived from the tests on the second survey's data are reported in table 13.22. Figure 13.8 presents the original path model, with the resultant beta weights for the path variables from this test inserted therein.

13.4.2.4.2 Second survey results: unskilled and semi-skilled stratum

The structural equations derived from the tests on the second survey's data are reported in table 13.23. Figure 13.9 presents the original path model, with the resultant beta weights for the path variables from this test inserted therein.

Table 13.22

Path Analysis Structural Equations:
Unskilled and Semi-Skilled ('Category B') Stratum
(First Survey)
(n = 421)

Equation 1:
PERMCOP = 0.578**(PFNPAR) + 0.220(PPAGWD) + 0.641**(PPSAFE)
+ 0.491**(PPGOAL)
(r-sq = .437**)

Equation 2:
FINSAT = 0.461**(PFNPAR) + 0.175**(PERMCOP) -
0.021(NPERCATT) - 0.056(NPERCEVF) - 0.068(PEROLAP)
+ 0.060(PERFEED)
(r-sq = .515**)

Equation 3:
GWDSAT = 0.006(PERMCOP) + 0.124*(PPAGWD) + 0.062(PPSAFE) +
0.077**(PPGOAL) + 0.021(NPERCATT) +
0.066#(NPERCEVF) - 0.034(PEROLAP) - 0.017(PERFEED)
(r-sq = .310**)

Equation 4:
JOBSAT = 0.176@(PFNPAR) + 0.308*(FINSAT) + 0.502**(PPAGWD)
+ 0.242@(PPSAFE) - 0.168#(PPGOAL) - 0.252(GWDSAT)
+ 0.212#(NPERCATT) + 0.329**(NPERCEVF) +
0.145(PEROLAP) + 0.221#(PERFEED)
(r-sq = .336**)

Equation 5:
GRNPERF = 0.127(FINSAT) - 0.079(GWDSAT) - 0.057(NPERCATT) +
0.309**(NPERCEVF) + 0.209@(PEROLAP) +
0.238#(PERFEED) + 0.144**(JOBSAT)
(r-sq = .268**)

** = p < 0.001
* = p < 0.01
# = p < 0.05
@ = p < 0.10

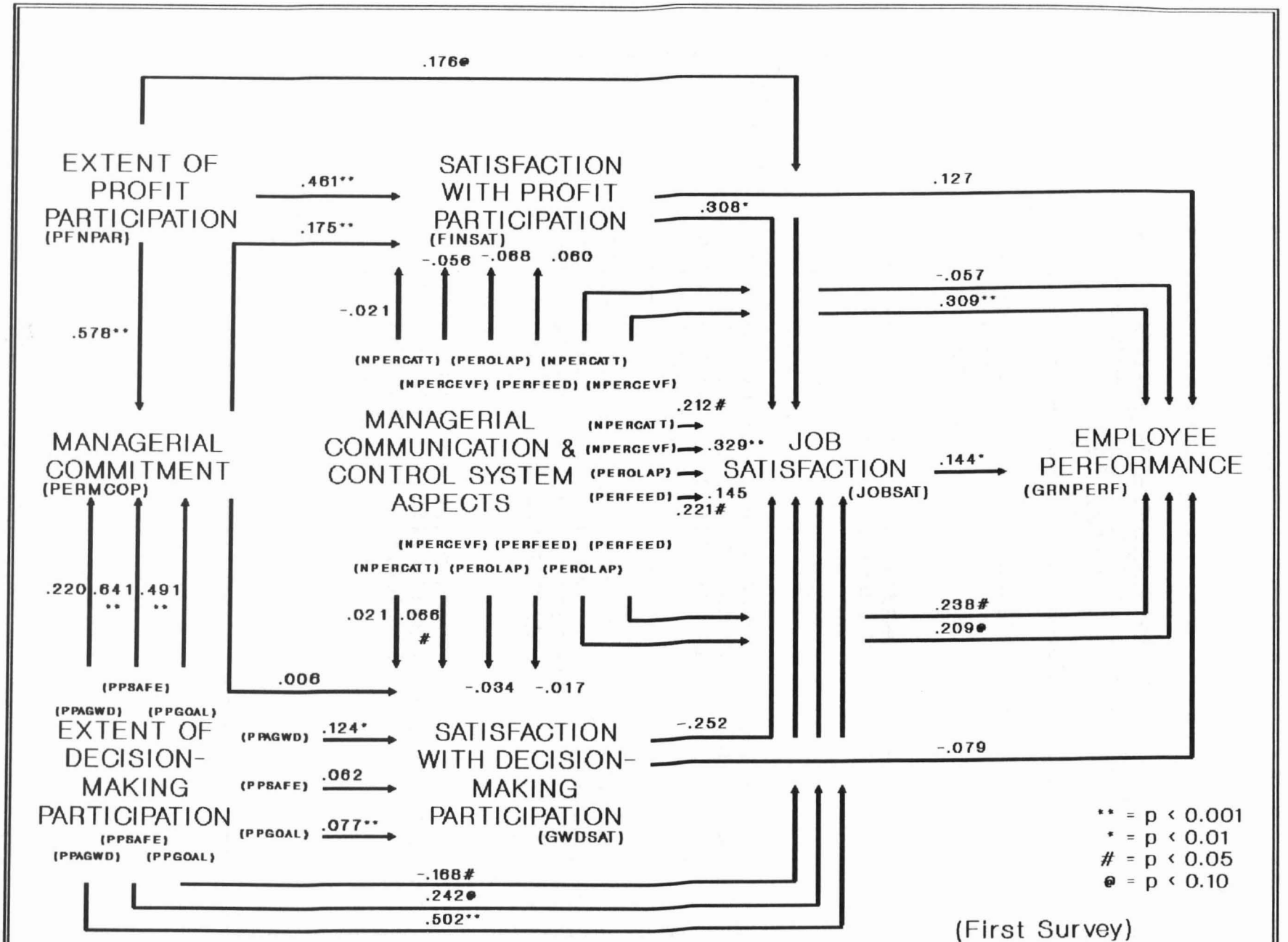

Figure 13.8: Path Analysis Results: Unskilled & Semi-Skilled Stratum (First Survey) (n = 421)

Table 13.23

Path Analysis Structural Equations:
Unskilled and Semi-Skilled ('Category B') Stratum
(Second Survey)
(n = 150)

Equation 1:
PERMCOP = 0.602*(PFNPAR) + 0.060(PPAGWD) + 0.933**(PPSAFE)
+ 0.556**(PPGOAL)
(r-sq = 0.576**)

Equation 2:
FINSAT = 0.644**(PFNPAR) + 0.124**(PERMCOP) +
0.087(NPERCATT) + 0.032(NPERCEVF) + 0.032(PEROLAP)
- 0.006(PERFEED)
(r-sq = 0.623**)

Equation 3:
GWDSAT = 0.035(PERMCOP) + 0.225*(PPAGWD) + 0.072(PPSAFE) +
0.062@(PPGOAL) - 0.025(NPERCATT) + 0.061(NPERCEVF)
+ 0.101(PEROLAP) - 0.063(PERFEED)
(r-sq = 0.530**)

Equation 4:
JOBSAT = 0.053(PFNPAR) + 0.301@(FINSAT) - 0.223(PPAGWD) -
0.345(PPSAFE) + 0.100(PPGOAL) + 0.673#(GWDSAT) +
0.035(NPERCATT) + 0.546**(NPERCEVF) +
0.623*(PEROLAP) - 0.157(PERFEED)
(r-sq = 0.457**)

Equation 5:
GRNPERF = 0.472**(FINSAT) + 0.262(GWDSAT) -
0.105(NPERCATT) + 0.231(NPERCEVF) - 0.078(PEROLAP)
+ 0.269(PERFEED) - 0.059(JOBSAT)
(r-sq = 0.311**)

** = p < 0.001
* = p < 0.01
# = p < 0.05
@ = p < 0.10

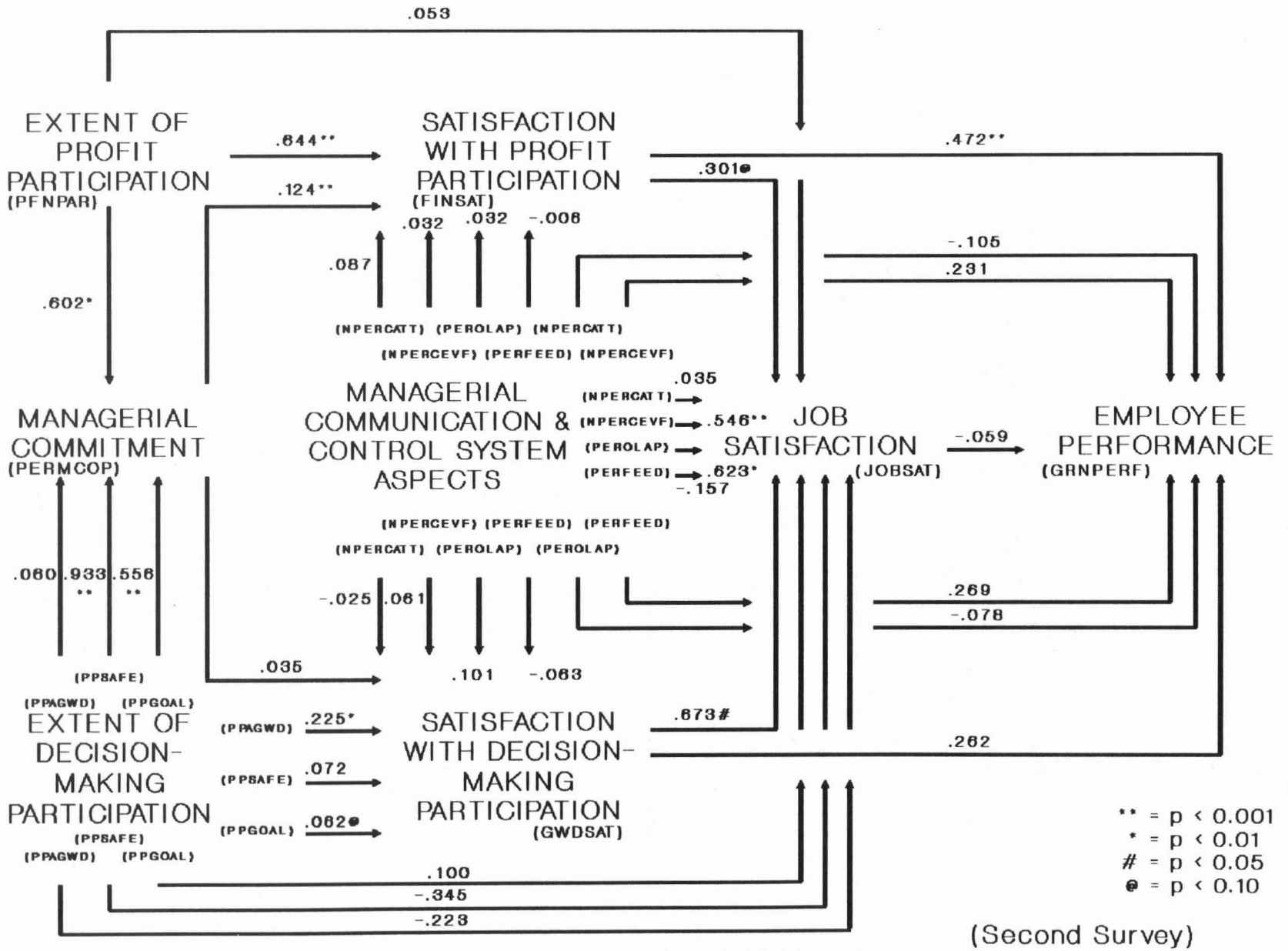

(Second Survey)
(n = 150)

Figure 13.9: Path Analysis Results: Unskilled & Semi-Skilled Stratum

Table 13.24 summarises the 'changes in r-squared' calculated in each stepwise regression procedure, for this testing of the path model on the semi-skilled and unskilled ('Category B') stratum.

Table 13.24

Path Analysis Test Results:
Semi-Skilled and Unskilled ('Category B') Stratum
(1st and 2nd Surveys)
Summary: Explanatory Power of Structural Equations

EQUATION NUMBER	DEPENDENT VARIABLE	CHANGE IN R-SQUARED (1st Survey) (n = 421)	CHANGE IN R-SQUARED (2nd Survey) (n = 150)
1	PERMCOP	0.372 **	0.405 **
2	FINSAT	0.449 **	0.474 **
3	GWDSAT	0.231 **	0.309 **
4	JOBSAT	0.265 **	0.365 **
5	GRNPERF	0.154 **	0.276 **

** = $p < 0.001$

Table 13.24 reflects that the model had substantial explanatory power, when applied to the unskilled and semi-skilled stratum. The total change in the explained variance of the dependent variables, due to the independent variables of the respective equations, was quite high, ranging from 15.4% to 44.9% in the first survey, and from 27.6% to 47.4% in the second survey. The explanatory power of the model, as indicated by the change in the 'r-squared' statistics, also substantially increased between the first and second surveys. All 'changes in r-squared' were significant ($p < 0.001$).

There was also an argument for revising the model, in its application to this stratum, because not all of the hypothesised relationships had been empirically supported. This will also be discussed further in chapter 15.

13.5 CONCLUSION

This chapter described, in detail, the exploratory findings of this study. Included was a description of the derivation and

testing of a path model of integrated employee participation. The tests established that the path model exhibited substantial explanatory power, which increased for most levels of the hierarchy over time.

However not all of the postulated relationships within the path model could be supported empirically. There was thus a case for improving the model by removing some relationships. Further, certain paths within the model had only been supported for certain levels of the organisational hierarchy. This indicated that different motivational processes may have been at work at the different levels, and that a different explanatory model should thus be considered for each stratum. These issues will be discussed in depth, and the resulting amended models will be described, in chapter 15.

CHAPTER 14

THE RESULTS OF THE QUALITATIVE DATA ANALYSIS

14.1 INTRODUCTION

The main objective of this chapter is to report on the 'qualitative' findings of the research study. The results reported in the preceding chapters have all been based on responses to the 'closed-ended' (Likert-type) questionnaire items obtained in the two data-collection surveys. This chapter will report, and briefly discuss, the responses to the 'open-ended' items at the end of the questionnaire form. These items are reproduced in appendix A-25.

In collecting and interpreting the 'qualitative data', the researcher was guided by Patton (1987), who stated:

> '.. in collecting qualitative data, the evaluator seeks to capture the richness of people's experiences in their own terms ... and understanding and meaning emerge from in-depth analysis of detailed descriptions and verbatim quotations.'

These 'qualitative' results will be analysed and discussed in sufficient detail in this chapter to clarify their meaning. The purpose of collecting the 'open-ended' response data was to see to what extent support could be found for the study's closed-ended Likert-type empirical findings. Section 14.2 analyses the responses, and briefly discusses these 'qualitative' findings, in relation to the previously-reported research results. A detailed discussion of all the findings of this research study follows in chapter 15.

In achieving the main objective of this chapter, the responses to the 'open-ended' questionnaire items will be reported and briefly analysed in the following sequence:

- 'positive' and 'negative' perceptions of the financial participation scheme operated by the subject mine; followed by

- 'positive' and 'negative' perceptions of the decision-making participation schemes in operation.

14.2 ANALYSIS OF RESPONSES TO THE OPEN-ENDED QUESTIONNAIRE ITEMS

Due to the auxiliary function of the qualitative section of the study, only a limited number of questionnaires were selected for purposes of analysing the open-ended responses. A total of 100 questionnaires from each survey were therefore randomly selected for analysis. In making this random selection, each sample of questionnaires was stratified as follows:

- 10 questionnaires were selected from those completed by 'managerial' level respondents;
- 20 questionnaires were selected from those completed by 'category A' ('supervisors and artisans') level respondents; and
- 70 questionnaires were selected from those completed by 'category B' ('unskilled and semi-skilled') level respondents.

The 'open-ended' responses were collated by the researcher, and are analysed in the following sections.

14.2.1 FINANCIAL PARTICIPATION: QUALITATIVE FINDINGS

14.2.1.1 Analysis of Responses to the Item: 'Things That I Think are Good About the Bonus Scheme'

Table 14.1 analyses employees' comments, drawn from the randomly-selected questionnaires, into eleven categories. These 'response categories' are ranked within the table in descending order, i.e. commencing with the category containing the highest total number of comments over both surveys.

Table 14.1 reflects that a range of 'positive' responses were made by employees at all three levels of the hierarchy. The category with the largest number of responses (76, or 35.2% of the total number of responses from both surveys) was labelled 'Provides financial benefits for employees'.

Table 14.1

'Open-Ended' Questionnaire Responses to the Item:
'Things That I Think Are Good About The Bonus Scheme'

RESPONSE CATEGORY	FIRST SURVEY (M)	(A)	(B)	SECOND SURVEY (M)	(A)	(B)	BOTH SURVEYS TOTAL	%
'Provides financial benefits for employees'	0	6	30	3	11	26	76	35.2
'Improves mine's productivity'	4	2	7	5	16	3	37	17.1
'Enhances motivation'	3	0	7	3	14	7	34	15.7
'Makes employees financially aware'	0	7	4	2	5	0	18	8.3
'Encourages teamwork'	0	0	8	2	2	4	16	7.4
'Generally a good idea'	0	3	3	0	3	5	14	6.6
'Enhances safety awareness'	0	0	2	0	3	6	11	5.1
'Reduces absenteeism'	0	0	0	2	2	0	4	1.9
'Breaks down barriers with management'	0	0	0	0	2	0	2	0.9
'Targets are attainable'	0	0	0	0	0	2	2	0.9
'System is fair'	0	0	0	2	0	0	2	0.9
Total number of 'positive' comments about the bonus scheme :							216	

(M) = Responses by 'Management' level respondents
(A) = Responses by 'Category A' ('Supervisors and Artisans') level respondents
(B) = Responses by 'Category B' ('Unskilled and Semi-Skilled') level respondents

Examples of specific comments under this category included:

- 'to earn more money';
- 'helps people very much: increases our salary'; and
- 'helps to pay the bills'.

The category with the second-highest number of total responses (37, or 17.1% of the total number of responses from both surveys) was labelled 'Improves mine's productivity'. Comments here included:

- 'encourages productivity';
- 'encourages more production'; and
- 'it is an incentive to perform better'.

The category labelled 'Enhances motivation' contained the third-highest number of total responses (34, or 15.7% of the total from both surveys). Comments here included:

- 'it motivates people';
- 'because it makes and encourages workers to put more effort into their work'; and
- 'it motivates people to work.'

These comments provided support for some of the quantitative findings of the study. The importance placed by employees on the financial benefits that may have accrued to them under the scheme indicated that their satisfaction with the program might have been related to the size of such benefits. This was consistent with the findings from the exploratory path analyses. There a consistent relationship was identified, at all levels of the hierarchy, between 'PFNPAR' ('Perceived Extent of Financial Participation') and 'FINSAT' ('Satisfaction With Financial Participation').

Comments within the remaining 'response categories', although fewer in number, provided support for some of the other quantitative findings, e.g.:

- comments within the 'reduces absenteeism' category supported a relationship between financial participation and employees' propensity to remain in their current

employment. Such a relationship was also suggested by the results of the path analyses; and

- comments within the 'targets are attainable' category lent support to a hypothesised moderating role of work-target attainability on the effects of employee participation. However only two comments were noted in this category, and such an effect had failed to be identified within the exploratory moderated multiple regression analyses (see table 13.9 in chapter 13).

There thus appeared to be support, within these qualitative findings, for some of the statistical findings previously reported.

14.2.1.2 Analysis of Responses to the Item: 'Things That I Think Are Bad About the Bonus Scheme'

Table 14.2 analyses employees' comments, drawn from the randomly-selected questionnaires, into ten categories.

Table 14.2 reflects that a range of 'negative' comments about the mine's cost-containment bonus scheme were made by employees at all three levels of the hierarchy. It was also noted that the total number of 'negative' comments over both samples was 35% higher than the total number of 'positive' comments. This suggested that, on balance, perceptions among the workforce relating to the cost-containment bonus system may have been unfavourable.

The category with the largest number of 'negative' responses (78, or 27.1% of the total responses from both surveys) was labelled 'Bonus too small; declined in size'. Examples of comments here included:

- 'diminishing potential';
- 'I think it must be increased in size';
- 'it's too little'; and
- '% bonus too low'.

Table 14.2

'Open-Ended' Questionnaire Responses to the Item: 'Things That I Think Are Bad About The Bonus Scheme'

RESPONSE CATEGORY	FIRST SURVEY (M)	(A)	(B)	SECOND SURVEY (M)	(A)	(B)	BOTH SURVEYS TOTAL	%
'Bonus too small; declined in size'	0	4	30	5	7	32	78	27.1
'Should rather be fixed addition to pay packet'	0	2	19	2	3	30	56	19.4
'Targets unrealistic'	0	8	7	0	6	15	36	12.5
'Timing of payments wrong'	0	0	13	3	0	17	33	11.6
'Targets can be manipulated'	2	11	3	6	4	0	26	9.0
'Not linked to individual effort'	0	3	2	2	6	7	20	6.9
'Poor communication'	0	0	9	0	4	7	20	6.9
'Inequitable distribution'	0	2	2	0	8	3	15	5.3
'Has lost its impact'	0	0	0	3	0	0	3	1.0
'Safety has suffered'	0	0	0	0	0	1	1	0.3
Total number of 'negative' comments about the bonus scheme :							288	

(M) = Responses by 'Management' level respondents
(A) = Responses by 'Category A' ('Supervisors and Artisans') level respondents
(B) = Responses by 'Category B' ('Unskilled and Semi-Skilled') level respondents

These comments could be directly related to quantitatively-supported associations previously reported. Specifically, the path analysis results suggested that employees' perceived extent of financial participation was positively associated with their satisfaction with the programme.

The category with the second-highest number of total responses (56, or 19.4% of the total) was labelled 'Should rather be fixed addition to pay packet'. Comments here included:

- 'it is not paid every month to employees';
- 'we don't get the same amount every month'; and
- 'we should get an increase, not this bonus'.

These comments could also be related to the hypothesised association between employees' perceived extent of financial participation and their satisfaction with such participation. It was also noted that the proportion of 'negative' comments within this category increased substantially from the first to the second surveys, i.e. by 21 to 35 comments. This could be attributed to the fact that between these points in time, a number of the monthly cost-containment targets had not been achieved by the workforce, and the respective bonuses had accordingly not been paid.

The category labelled 'Targets unrealistic' contained the third-highest number of total responses (36, or 12.5% of the total). Comments here included:

- 'more realistic targets must be set';
- 'unfair targets make it impossible to make any money'; and
- 'targets seem to be raised out of our reach'.

These comments gave support to the hypothesised moderating impact, within the explanatory section of the study, of 'work target attainability' on the effects of participation (see the results of testing hypothesis 7 in chapter 12). The proportion of comments within this category also increased from the first to the second survey. This was plausible, in the light of the above-reported failure of the workforce to achieve their cost-containment targets.

Comments within the remaining 'response categories' provided further support for the quantitative research findings, e.g.:

- comments within the 'targets can be manipulated' category suggested that employees' perceptions of the system of

managerial control and communication might moderate the effects of employee participation; and

- comments within the 'poor communication' category also lent support to such a moderating effect. The perceived extent of performance feedback provided to employees was specifically tested as a potential moderating factor.

These comments suggested that communication and feedback were indeed valued by workers, and the lack thereof may have negatively affected their satisfaction with the financial participation programme. It was also consistent with the correlations obtained between the 'FINSAT' ('Satisfaction With Financial Participation') and 'PERFEED' ('Perceived Extent of Feedback Relating to Employee's Performance') scores (see appendix C). For example in the first survey this correlation, for the whole sample, was $r = 0.29$ ($p < 0.05$).

Therefore there appeared to be support, within these qualitative findings, for some of the explanatory findings. The high number of 'negative' comments suggested, however, that the financial participation programme was not favourably perceived by some personnel.

14.2.2 DECISION-MAKING PARTICIPATION: QUALITATIVE FINDINGS

14.2.2.1 Analysis of Responses to the Item: 'Things That I Think Are Good About the (Decision-Making) Participation Schemes'

Table 14.3 analyses employees' comments, drawn from the randomly-selected questionnaires, into eight categories.

Table 14.3 reflects that many 'positive' comments about the mine's decision-making participation schemes were made by employees at all three levels of the hierarchy. The category with the largest number of 'positive' comments (113, or 39.0% of the total) was labelled 'Communication enhanced'. Examples of comments here included:

- 'problems can get solved by effective communication';
- 'improves communication';
- 'forums provided to discuss issues'; and

- 'here we share ideas about the matters of work with our supervisors'.

Table 14.3

'Open-Ended' Questionnaire Responses to the Item: 'Things That I Think Are Good About The (Decision-Making) Participation Schemes'

RESPONSE CATEGORY	FIRST SURVEY (M)	(A)	(B)	SECOND SURVEY (M)	(A)	(B)	BOTH SURVEYS TOTAL	%
'Communication enhanced'	8	12	35	7	24	27	113	39.0
'Better relations with management'	5	7	21	9	8	13	63	21.7
'Safety has improved'	1	2	7	2	4	11	27	9.3
'Encourages innovation and problem-solving'	3	4	5	4	6	3	25	8.6
'Integration: a feeling of belonging to the firm'	0	1	7	0	0	15	23	7.9
'Encourages hard work'	1	2	5	2	0	7	17	5.9
'Generally a good idea'	0	1	9	0	2	2	14	4.8
'Productivity has improved'	1	1	2	2	2	0	8	2.8
Total number of 'positive' comments about the decision-making participation schemes:							290	

(M) = Responses by 'Management' level respondents
(A) = Responses by 'Category A' ('Supervisors and Artisans') level respondents
(B) = Responses by 'Category B' ('Unskilled and Semi-Skilled') level respondents

The high number of 'positive' comments within this category, especially when compared to the small number of 'negative' comments recorded (see section 14.2.4, below), suggested a relatively high level of satisfaction with the decision-making programmes, amongst all levels of staff. This supported the

statistical findings, which reflected that the modal scores for 'GWDSAT' ('Satisfaction with Participation in Work-Related Decision-Making') were higher than the median points, for all levels of the hierarchy.

The category with the second-highest number of total responses (63, or 21% of the total) was labelled 'Better relations with management'. Comments here included:

- 'builds good relationship with management';
- 'no tension between workers and management';
- 'eliminates misunderstanding between management and employees'; and
- 'facilitates inter-personal relationships'.

These comments suggested a positive association between employees' perceptions of their work situation and decision-making participation.

The category labelled 'Safety has improved' contained the third highest number of total responses (27, or 9.3% of the total). Comments here included:

- 'reminds us of the rules concerning safety';
- 'like the safety part of it';
- 'helps me to be safe everyday'; and
- 'remind one another about prevention of danger'.

These comments reinforced quantitative findings of the study, that participation in decision-making was associated with positive attitudes towards other aspects of the work situation. It also confirmed the priority given to safety issues within the mining industry.

Comments within the remaining 'response categories' provided further support for the previous research findings, e.g.:

- comments within the 'integration: a feeling of belonging to the firm' category supported the existence of a positive relationship between employees' perceived extent of participation and organisational commitment.

- comments within the 'productivity has improved' category lent support to the proposed positive relationship, within the path model (see chapter 13), between satisfaction with decision-making participation and employees' performance. However only eight responses within this category were noted, which comprised only 2.8 % of the total responses over both surveys. Also, within the path analysis results, this relationship was found not to be significant.

14.2.2.2 Analysis of Responses to the Item: 'Things That I Think Are Bad About the (Decision-Making) Participation Schemes'

Table 14.4 analyses employees' comments, drawn from the randomly-selected questionnaires, into eight categories.

Table 14.4 reflects that relatively few unfavourable (122, compared to 290 favourable) comments were made about the decision-making participation schemes. These comments did suggest, however, that some employees held negative perceptions about the participation programmes. As noted above, this was consistent with the high modal scores obtained on the 'GWDSAT' ('Satisfaction with Participation in Work-Related Decision-Making') variable.

The category with the largest number of 'negative' comments (30, or 24.6% of the total over both surveys) was labelled 'Lip service only paid to the principle'. Examples of comments here included:

- 'lip-service often paid to genuine problems';
- 'my supervisor is not serious about my problems: if you complain you will be spotted and hated for that';
- 'none of the managers I have met actually believe in the scheme - it is a sham'; and
- 'the management is not really prepared to listen to the employees' grievances'.

Although relatively few in number, these comments suggested scepticism among members of the workforce regarding

management's genuine commitment to the concept of participation.

Table 14.4

'Open-Ended' Questionnaire Responses to the Item: 'Things That I Think Are Bad About The (Decision-Making) Participation Schemes'

RESPONSE CATEGORY	FIRST SURVEY (M)	(A)	(B)	SECOND SURVEY (M)	(A)	(B)	BOTH SURVEYS TOTAL	%
'Lip service only paid to the principle'	0	5	8	3	7	7	30	24.6
'System has been abused'	2	3	4	6	0	5	20	16.4
'Respect for management has declined'	3	3	3	3	5	2	19	15.6
'Frivolous issues only are discussed'	0	2	0	0	9	7	18	14.8
'Poor feedback'	0	0	7	0	7	0	14	11.4
'Not applied consistently across the hierarchy'	0	7	0	2	3	0	12	9.8
'Not suitable for mining conditions'	0	0	0	0	5	0	5	4.1
'No measure of effectiveness exists'	0	0	0	0	4	0	4	3.3

Total number of 'negative' comments about the decision-making participation schemes: 122

(M) = Responses by 'Management' level respondents
(A) = Responses by 'Category A' ('Supervisors and Artisans') level respondents
(B) = Responses by 'Category B' ('Unskilled and Semi-Skilled') level respondents

This was consistent with the quantitative findings, which suggested that perceived managerial and supervisory commitment to participation was significantly and positively associated with employee attitudes towards the participation schemes.

The category with the second-highest number of total responses (20, or 16.4% of the total over both surveys) was labelled 'System has been abused'. Comments here included:

- 'abuse of system';
- 'victimisation occurs'; and
- 'people are not honest in the sessions'.

These comments indicated that a reason for dissatisfaction with the decision-making participation schemes was a perception that the forums for participation were not being used effectively by participants. Thus feelings, such as indicated here, that 'participation' was not genuine, might plausibly lead to dissatisfaction among participants with the decisional participation programme.

The category labelled 'Respect for management has declined' contained the third-highest number of 'negative' responses (19, or 15.6% of the total over both surveys). It was noted that the majority of these comments came from respondents in the 'management' and 'supervisors and artisans' categories. Comments here included:

- 'middle management have been cut out by subordinates to discuss matters with senior management - discipline has suffered';
- 'general discipline on this mine has deteriorated'; and
- 'people lost pride in their jobs due to having no more respect for management'.

These comments were primarily made by middle- and senior-management personnel. They suggested that, within those ranks, some respondents were resisting the decision-making participation initiatives because they perceived that their positions of authority might be undermined.

Comments within the remaining 'response categories' provided further support for the quantitative research findings, e.g.:

- comments within the 'frivolous issues only are discussed' category supported the hypothesised relationships between employees' perceived extent of (genuine) decision-making

participation and satisfaction with decisional participation. These comments suggested that when employees perceived that participation was not meaningful, they were less satisfied therewith; and comments within the 'poor feedback' category further supported the moderating role of aspects of the managerial system of communication and control on the effects of participation.

Further support was therefore provided by these qualitative comments, for the quantitative findings of the study.

14.3 CONCLUSION

This chapter analysed and briefly interpreted the 'qualitative' data from the two surveys of the research study. Tentative support was found therein for many of the statistical findings, reported in the previous chapters. An in-depth discussion of all the research findings will be presented in chapter 15.

CHAPTER 15

DISCUSSION OF THE FINDINGS, CONCLUSIONS AND RECOMMENDATIONS

15.1 INTRODUCTION

The preceding four chapters reported the findings of this research study, with sufficient interpretation to clarify their meaning. This chapter now aims, as its main objective, to interpret the results in the light of previous research. In achieving this main objective, the following sub-objectives will be addressed in sequence:

- the explanatory (hypothesis-testing) results of the research will be interpreted and evaluated, firstly in the context of the theoretical commentaries and empirical research reports within the literature, and secondly in terms of their support for the 'Model of Integrated Employee Participation (incorporating moderating effects)' described in chapter 8;
- the exploratory research results (including the results of the qualitative data analysis, where considered pertinent) will be similarly interpreted and evaluated;
- all these interpretations will be integrated in a review of the main themes and findings of the study. Within this review, the major implications of the findings both for current theories of employee participation, and for future theory-building and research, will be highlighted;
- limitations of the research will be identified and briefly evaluated for their impact on the research findings; and
- finally, recommendations for both management and researchers, arising from these findings, will be made.

A brief outline of the basic utility of the various motivation theories discussed in chapter 3, in the light of the empirical evidence, will be presented within this chapter. A main focus, however, will be to assess the extent of support provided by the research findings for each category of explanatory model of the effects of employee participation, reviewed in chapter

3. These categories of models (cognitive, affective and contingency) each proposed different mechanisms by which participation might positively impact on employees' work-related attitudes and performance. An evaluation will therefore be made as to the explanatory utility of models within each of these categories, when applied to 'integrated' employee participation schemes operated within the South African gold-mining industry.

15.2 DISCUSSION OF THE EXPLANATORY FINDINGS

This section discusses and evaluates the results of the hypothesis-testing section of the research study. The hypotheses were derived from propositions within the 'Model of Integrated Employee Participation (incorporating moderating effects)', and were divided into two categories. These were, firstly, the 'hypotheses of association', and secondly, the 'hypotheses of moderating effects'. The following subsections will discuss the results of testing the hypotheses, under each of these category headings.

15.2.1 DISCUSSION OF THE RESULTS IN RELATION TO THE HYPOTHESES OF ASSOCIATION

The hypotheses of association all referred to simple bivariate relationships within the 'Model of Integrated Employee Participation (incorporating moderating effects)'. Thus:

- hypothesis 1 proposed a positive relationship between employees' job satisfaction and their perceived extent of financial participation. The hypothesis was supported (see section 12.3.3.1 of chapter 12). This finding was consistent with those of previous researchers (e.g. Hammer et al, 1982; Long, 1978a). It also supported the theoretical propositions of commentators (e.g. Kelly and Kelly, 1990; Ramsay et al, 1990) that employees' work-related attitudes were affected by the perceived size and materiality of the financial benefits arising from financial participation schemes;
- hypothesis 2 proposed a positive relationship between employees' job satisfaction and their perceived extent of participation in general work-related decision-making.

This hypothesis was supported (see section 12.3.3.2 of chapter 12). This finding was consistent with those of previous researchers (e.g. Hines, 1974; Kelly and Kelly, 1990; Miller and Monge, 1986). It also supported the theoretical propositions of commentators, such as Locke and Schweiger (1979). They proposed that employee participation in work-related decision-making might enhance job satisfaction by the fulfilment of workers' psychological needs. This affective explanation of the effects of employee involvement was also proposed by Coch and French (1948). The empirical support for hypothesis 2 in this study thus provided support for the affective explanatory models of the effects of employee participation schemes;

- hypothesis 3 proposed a positive relationship between employees' job satisfaction and their perceived extent of participation in specific types of work-related decision making. The specific issues selected for testing in this hypothesis were employees' participation in work target setting, and their participation in safety-related decision making. The hypothesis was supported (see section 12.3.3.3 of chapter 12). These findings were consistent with those of previous researchers. Steers (1976) and Mento et al (1987) found that job satisfaction and participation in work-goal setting were positively associated, and Miller and Monge (1986), in their meta-analysis, reported significant correlations between job satisfaction and perceived participation in specific decision-making issues. The magnitude of the correlations obtained here (see table 12.3) ranged from $r = 0.28$ to $r = 0.40$ ($p < 0.001$). These were somewhat higher than those reported by Miller and Monge (1986). They reported an average correlation between job satisfaction and 'specific issue participation' of only $r = 0.21$. They also reported an average correlation between job satisfaction and 'multiple issue participation' of $r = 0.46$. Thus, contrary to the findings of Miller and Monge (1986), the 'specific-issue participation' - satisfaction and the 'multiple-issue participation' -

satisfaction correlations in this study did not differ significantly from each other. This suggested that the inclusion of specific issues of work-goal setting and safety matters within the decision-making participation scheme may have been the major reason for enhanced job satisfaction arising from the overall involvement programme;

- hypothesis 4 proposed a positive relationship between employees' job satisfaction and their performance. Both self- and supervisor-rated performance measures were used to test this hypothesis, which was supported (see section 12.3.3.4 of chapter 12). This finding was consistent with those reported by previous researchers, for example Iaffaldano and Muchinsky (1985). Their meta-analysis, as discussed in chapter 6, revealed an average correlation between job satisfaction and employee performance of only $r = 0.146$. Such low correlations were typical of reported empirical studies into the job satisfaction - performance relationship. The findings were also consistent with theoretical propositions by commentators (e.g. Organ, 1988; Steers and Porter, 1991). The results of testing hypothesis 4 therefore supported the existence of a significant but low correlation between employees' job satisfaction and their performance;
- hypothesis 5 proposed a positive relationship between employees' job satisfaction and their stability. Employees' 'Propensity to Remain' (in their current employment) was used as a surrogate measure for purposes of testing this hypothesis, which was supported (see section 12.3.3.5 of chapter 12). This finding was consistent with those of previous researchers, as reported in chapter 6 (e.g. Shore and Martin, 1989; Williams and Hazer, 1986). It also supported the theoretical propositions of commentators (e.g. Mobley, 1977; Rhodes and Steers, 1990) that employees' job satisfaction was negatively associated with their absenteeism and turnover.

All the hypotheses of association were supported at both points in time, i.e. by the data from both surveys. Thus longitudinal support for a number of the propositions within the 'Model of Integrated Employee Participation (incorporating moderating effects)' was provided. This model suggested that, subject to certain moderating conditions, simultaneous financial and decisional participation by employees would lead to enhanced job satisfaction and performance. Specific support for the model, provided by these explanatory research results included:

- support for the proposition that the extent of both financial and decision-making participation were positively associated with employees' job satisfaction;
- support for the proposition that a positive relationship existed between 'psychological' (perceived) participation and employee performance, through the enhancement of job satisfaction; and
- support for the proposition that a positive relationship existed between 'psychological' (perceived) participation and reduced labour absenteeism, through the enhancement of job satisfaction.

Major pillars of the 'Model of Integrated Employee Participation (incorporating moderating effects)' were therefore supported by the results of testing the hypotheses of association. Further, the results provided support for some of the theories and models of motivation, discussed in chapter 3. For example, relationships between 'intrinsic' and 'extrinsic' rewards, performance and satisfaction (as found in this study) were proposed within Porter and Lawlers' (1968) model of motivation (see figure 3.2).

The following subsection discusses the results of testing the hypotheses of moderating effects, in the context of the relevant propositions from within the 'Model of Integrated Employee Participation (incorporating moderating effects)'.

15.2.2 DISCUSSION OF THE RESULTS IN RELATION TO THE HYPOTHESES OF MODERATING EFFECTS

The hypotheses of moderating effects all referred to the proposed moderating impact of specific factors within the 'Model of Integrated Employee Participation (incorporating moderating effects)'. Thus:

- hypothesis 6 proposed that personality factors moderated relationships between employees' perceived extent of participation, job satisfaction and performance. The hypothesis was not supported at either point in time (see section 12.4.3.1 of chapter 12). This finding was consistent with the findings of Tosi (1970) and Searfoss and Monczka (1973) who were unable to demonstrate a significant moderating impact by personality factors (authoritarianism and need for independence) on the effects of participation. These findings conflicted, however, with those of Vroom (1959, 1960) who established a moderating effect by employees' needs for independence and their authoritarianism on the relationship between participation and job satisfaction. They also conflicted with theoretical propositions by commentators such as Abdel-Halim (1983), Rowland (1976) and Runyon (1973), who suggested that personality factors would moderate the effects of participation programmes;
- hypothesis 7 proposed that employees' perceptions of the system of managerial control and communication moderated relationships between employees' perceived extent of participation, job satisfaction and performance. The hypothesis was supported in the first survey, but not in the second (see section 12.4.3.2 of chapter 12). These findings therefore partially supported the theoretical propositions of commentators such as Emmanuel et al (1991), who suggested that for budgetary and control systems to be effective, work targets should be reasonably attainable, participation in target setting should be encouraged, and workers should be held responsible only for issues over which they have

reasonable control. They also partially supported the reported empirical findings of Miller (1965) and Oldham (1975), who found that supervisory characteristics and feedback, respectively, moderated the effects of participation programmes; and

- hypothesis 8 proposed that employees' perceptions of managerial commitment to participation moderated relationships between employees' perceived extent of participation, job satisfaction and performance. The hypothesis was not supported at either point in time (see section 12.4.3.3 of chapter 12). These findings therefore failed to support the theoretical proposals by commentators (e.g. Fogarty and White, 1988; Klein, 1987) that perceived levels of managerial commitment to employee involvement moderated participation's effect on workers' attitudes and performance. Previous researchers (e.g. Miles, 1975; Miles and Ritchie, 1971; White, 1979b) had found that a moderating effect by perceived managerial commitment to participation did exist, but this study was unable to support such an effect.

The results of testing the hypotheses of moderating effects were therefore mixed, with only one hypothesis being partially supported (i.e. a 'grouped' moderating effect for the 'managerial control system' variables was established, but for the first survey only). Thus support for a number of the propositions within the 'Model of Integrated Employee Participation (incorporating moderating effects)' could not be provided by these explanatory findings:

- propositions relating to the proposed moderating effects of employees' perceptions of aspects of the organisation's managerial system of communication and control on the effects of 'Integrated Employee Participation' schemes were only partially supported;
- the proposition that the extent of managerial commitment to 'Integrated Employee Participation' schemes would moderate the effects thereof was not supported at either point in time; and

- the proposition that the effects of 'Integrated Employee Participation' schemes would be moderated by personality attributes of each subject employee was not supported.

Thus the majority of the moderating effects proposed within the 'Model of Integrated Employee Participation (incorporating moderating effects)' were not consistently supported over both surveys. This was consistent with the findings of Miller and Monge (1986, p 743) who found no support for any of the predicted moderating effects in their meta-analysis of studies into the effects of participation schemes.

These results also generally failed to support contingency models of the effects of participation (i.e. those that incorporate proposed moderating effects between participation and the outcomes thereof). These findings suggested that such explanatory mechanisms may not account for 'integrated' schemes' influences on job satisfaction and employee performance, within the South African gold-mining industry.

15.2.3 DISCUSSION OF THE RESULTS IN RELATION TO THE HYPOTHESIS OF WORK-LEVEL SPECIFIC MODERATING EFFECTS

Hypothesis 9 stated that most moderating effects on the relationships between participation, worker attitudes and performance were work-level specific. The hypothesis was supported (see section 12.4.3.4 of chapter 12). This indicated that the majority of moderating effects identified in the study were not replicated at every level of the hierarchy. This was consistent with the theoretical propositions of a number of commentators (e.g. Kanter, 1982; Mulder, 1971) that the effects and dynamics of employee participation schemes varied at different occupation levels.

By establishing that the extent and / or significance of moderating effects varied across work levels, this finding provided some support for a contingency approach towards explaining the effects of 'Integrated Employee Participation' schemes, and for exploring the dynamics of the interrelationships between participation, employee attitudes

and performance. However the finding conflicted with that of Miller and Monge (1986), who were unable to find any differences in the effects of participation, or on the moderators thereof, between groups of managers and lower-level employees.

15.2.4 DISCUSSION OF THE RESULTS IN RELATION TO THE HYPOTHESIS OF WORK-SITE SPECIFIC MODERATING EFFECTS

Hypothesis 10 stated that most moderating effects on the relationships between participation, worker attitudes and performance were situation (work-site) specific. For purposes of testing this hypothesis within the gold-mining industry, 'work-sites' were divided between those above- or below-ground level. The hypothesis was supported (see section 12.4.3.5 of chapter 12). This indicated that the majority of moderating effects identified in the study were not found to exist in respect of both those employees working above ground level, and those working below-ground. This finding was consistent with that of White (1979a), who tested the moderating effects of 73 variables on the effects of participation schemes at fourteen different research sites. While identifying moderating effects, White (1979a) found that none were consistently significant at all fourteen sites. See chapter 3 for a discussion of White's (1979a) study.

As moderating effects were found to differ between work-sites, these results were also consistent with a contingency approach towards explaining the effects of 'Integrated Employee Participation' schemes.

15.2.5 DISCUSSION OF THE RESULTS IN RELATION TO THE HYPOTHESIS OF TIME-SPECIFIC MODERATING EFFECTS

Hypothesis 11 stated that most moderating effects on the relationships between participation, worker attitudes and performance were time-specific. The hypothesis was supported (see section 12.4.3.6 of chapter 12). This indicated that the majority of moderating effects identified in the study were not found to exist at both points in time. However this finding was in contrast to the longitudinal results of testing

the hypotheses of association, which were supported at both points in time.

Thus bivariate direct relationships within the 'Model of Integrated Employee Participation (incorporating moderating effects)', tested by hypotheses 1 to 5, were supported longitudinally, whereas the majority of moderating effects that were identified by this study were not supported longitudinally.

The only 'grouped' moderating effects identified at both points in time were by the 'managerial control system' variables. It would therefore be useful to identify which individual variables within that set were most likely to be responsible for the moderating effects noted. A discussion of the two analyses where consistent moderating effects were found now follows.

A 'grouped' moderating effect was found, in both surveys, in respect of the regression of 'PFNPAR' ('Perceived Extent of Financial Participation', independent variable) and 'JOBSAT' ('Job Satisfaction', dependent variable) (see table 12.7). Thus it appeared that the effect of the cost-containment bonus scheme on job satisfaction was consistently moderated by employees' perceptions of the managerial system of communication and control. A scrutiny of the moderated multiple regression report for this analysis (see appendix D-1) indicated which of the four variables within this 'managerial control system' set exerted the greatest moderating effect. The 'interaction term' with 'NPERCATT' ('Perceived Attainability of Employee Goals') produced the highest regression coefficient of the set (0.61), and the t-value for the interaction term indicated that it was significant at the $p < 0.01$ level.

These results thus suggested that employees' perceived attainability of their work targets moderated the relationship between employees' perceived extent of financial participation and their job satisfaction. This was plausible, as workers

might be expected to be less motivated by an incentive bonus if they perceived that the target that triggered payment thereof was difficult to attain. This was also consistent with comments by Wright (1986), who stated that the setting of 'trigger points' for bonus payments needed to be balanced between difficult hard-to-attain targets, and at levels which would generate automatic, regular payments. The 'qualitative' results of this study further supported these findings (see chapter 14). These reflected that a substantial proportion (12.5%) of the 'negative' comments about the cost-containment bonus scheme fell within a category labelled 'targets unrealistic'.

A 'grouped' moderating effect by the 'managerial control system' set of variables was also found to exist, in both surveys, in respect of the regression of 'PPSAFE' ('Perceived Extent of Participation in Safety-Related Decision-Making', independent variable) and 'JOBSAT' ('Job Satisfaction', dependent variable). Thus it appeared that the effect of decision-making participation in specific safety issues on job satisfaction was consistently moderated by employees' perceptions of the managerial system of communication and control. A scrutiny of the moderated multiple regression report for this analysis (see appendix D-3) indicated which of the four variables within this 'managerial control system' set exerted the most significant moderating effects. The 'interaction terms' with 'NPERCATT' ('Perceived Attainability of Employee Goals') and with 'PEROLAP' ('Perceived Extent of Overlap of Employees' Assigned Areas of Responsibility and Control') were significant ($p < 0.01$), as indicated by their respective 't-values'.

These results thus suggested that employees' perceived attainability of their work targets, and their perceived extent of overlap of their assigned areas of responsibility and control, moderated the relationship between employees' perceived extent of participation in safety-related decision-making and their job satisfaction. This was plausible, as workers would be expected to be less satisfied

by participation in safety-related decision-making if they perceived that management were over-emphasising production targets at the expense of safety standards. They might also be less motivated by safety-related decision-making participation, if they perceived that the decisions they were involved in did not relate to their own work areas or personal responsibilities.

Despite the above findings, while the proposed direct associations between participation, job attitudes and performance were consistent over time, the same could not be said of the moderating effects proposed within the 'Model of Integrated Employee Participation (incorporating moderating effects)'.

15.2.6 OVERVIEW OF THE EXPLANATORY RESULTS IN RELATION TO PROVIDING SUPPORT FOR THE 'MODEL OF INTEGRATED EMPLOYEE PARTICIPATION (INCORPORATING MODERATING EFFECTS)'

The results in relation to the hypotheses thus provided mixed support for the 'Model of Integrated Employee Participation (incorporating moderating effects)'. As discussed above, a number of the 'main effect' relationships proposed within the model were supported by the results in relation to the hypotheses of association. However the proposed moderating effects of employees' personality attributes, and of their perceptions of management's commitment to participation, on the effects of the 'integrated participation schemes' were not supported. The proposed moderating effect of the 'managerial system of communication and control' variables was only partially supported.

Further aspects of the model were tested within the exploratory section of the research study, and will be discussed below. It appeared from the findings discussed above, however, that at least as far as the proposed moderator variables of the model were concerned, the majority of such moderating effects were either non-existent or inconsistent over time.

15.2.7 CONCLUSION

This section discussed the findings of the research study, in relation to the hypotheses. This explanatory section of the research found consistent and significant support for the hypotheses of association, but mixed support for the hypotheses of moderating effects.

15.3 DISCUSSION OF THE EXPLORATORY FINDINGS

This section discusses the exploratory results of the research study. The main focus of the exploratory analyses, discussed in the following sub-sections, was on investigating the direct relationships between variables, using path analytical techniques. This was done to explore for the dynamic interactions at work within 'integrated participation' programmes.

The discussion will be presented in the following sequence:

- firstly, the results of the 'backward elimination' multiple regression analyses will be discussed and evaluated in the light of previous research;
- secondly, the results of the exploratory moderated multiple regression analyses will be discussed and evaluated in the light of previous research;
- thirdly, the results of testing the path model of 'Integrated Employee Participation' will be discussed and evaluated. This model was tested, at both points in time, on the whole sample as well as on each stratum of the organisational hierarchy. The results of all these tests will be discussed, and resulting amendments to the path model for each level of the hierarchy will be proposed; and
- finally, all the exploratory results discussed within this section will be evaluated in terms of their support for the 'Model of Integrated Employee Participation (incorporating moderating effects)', described in chapter 8.

As discussed in section 10.9.3 of chapter 10, the level of significance set for the interpretation of the exploratory findings was $p < 0.10$. This was less stringent than the $p < 0.05$ level of significance set for interpreting the explanatory findings, but was consistent with the practice of previous exploratory researchers (e.g. Charoux, 1984; Staw and Oldham, 1978).

One reason for accepting a less stringent level of significance within this exploratory section of the research was a desire to reduce the possibility of making 'Type II' errors. A 'Type II' error refers to the failure to reject a false null hypothesis; a 'Type I' error is made when a true null hypothesis is rejected (Emory and Cooper, 1991 p 523). While it was acknowledged that increasing the significance level from $p < 0.05$ to $p < 0.10$ increased the possibility of making 'Type I' errors, this was felt to be an acceptable risk in exploratory research of this nature.

15.3.1 DISCUSSION OF THE RESULTS OF THE EXPLORATORY 'BACKWARD ELIMINATION' MULTIPLE REGRESSION ANALYSES

The results of the exploratory 'backward elimination' multiple regression analyses were reported and substantially interpreted in section 13.2 of chapter 13, and will not be discussed in depth again here.

These analyses were exploratory in so far as they sought plausible 'predictor variables' for each of the attitudinal and behavioural outcome variables of the study. In so doing, it was noted that major pillars of the 'Model of Integrated Employee Participation (incorporating moderating effects)' were supported by these exploratory regression results. For example:

- employees' perceptions of managerial commitment to 'Integrated Employee Participation' were found to be significant 'predictors' of both employees' levels of organisational commitment and of their job satisfaction;
- employees' perceived extent of participation in general work-related decision-making and their perceived extent

of participation in work target setting were found to be significant 'predictors' of job satisfaction levels;

- job satisfaction and organisational commitment levels were found to be 'predictors' of employees' propensities to remain in their current employment; and
- job satisfaction and organisational commitment levels 'predicted' employees' (supervisor-rated) performance levels.

Thus further support for the model, in addition to that arising from the results of testing the research hypotheses, was provided by these exploratory regression results. Their major purpose, however, was to assist in the development of a path model of integrated employee participation, which was subsequently tested on the data from both surveys. The results of those tests were reported and briefly interpreted in section 13.4.2 of chapter 13, and will be discussed in detail in section 15.3.3.

15.3.2 DISCUSSION OF THE RESULTS OF THE EXPLORATORY MODERATED MULTIPLE REGRESSION ANALYSES

This sub-section discusses the results of the additional, exploratory, moderated multiple regression analyses. These results were presented in section 13.3 of chapter 13.

These additional moderated multiple regressions utilised the less stringent level of significance ($p < 0.10$). This was done to allow the maximum opportunity to explore for possible moderating effects, which were eliminated in the more rigorous hypothesis-testing results.

Thus 'significant' moderating effects within this discussion were deemed to exist where the 'difference in r-squared' was found to be statistically significant ($p < 0.10$) in terms of the 'F-value' test (see section 12.4.3 of chapter 12 for a description of this test). This decision was also justified by the comments of Staw and Oldham (1978, p 556):

> 'In order to demonstrate the theoretical significance of the moderator variable only significant differences need be found. For theory testing, the magnitude and even the direction of the relationships are less important than significant differences being found as predicted.'

The results of testing for significant 'grouped' moderating effects by the 'personality' set of variables, within this 'exploratory' section were reported in chapter 13 (see table 13.8). Only one such effect was found, in the (first survey) regression of 'PFNPAR' ('Perceived Extent of Financial Participation', independent variable) and 'FINSAT' ('Satisfaction With Financial Participation', dependent variable). An examination of appendix D-8 revealed that the interaction term with 'AUTHORM' ('Authoritarianism') was significant, as indicated by the 't-value' test. This was consistent with empirical findings by Vroom (1959, 1960), who found that authoritarianism moderated the relationships between employees' participation in work-related decision-making and their job satisfaction and performance.

The stringent hypothesis-testing section of this study had not supported the existence of any moderating effects by the 'personality' set of variables. This exploratory analysis suggested, however, that employees' personality attributes may, in fact, moderate the relationship between employees' financial participation and their satisfaction therewith. Such moderating effects by personality factors were consistent with the theoretical propositions of various commentators (e.g. Abdel-Halim and Rowland, 1976; Vroom, 1960).

The results of testing for significant 'grouped' moderating effects by the 'managerial control system' set of variables, within this exploratory section, were also reported in chapter 13 (refer to table 13.9 for the detailed results). Four such effects were found. The detailed reports for these analyses (see appendix D) indicated, in terms of the respective 't-values', which interaction terms were significant (and therefore which of the 'managerial control system' variables

were exerting the moderating effects). The significant effects identified were:

- employees' perceptions of the fairness of supervisory evaluation moderated the relationship (in both surveys) between their perceived extent of participation in safety-related decision-making and their satisfaction with participation in work-related decision-making. This was consistent with previous findings by Decoster and Fertakis (1968), Oldham (1975) and Pearce and Porter (1986), all of whom reported reduced levels of job satisfaction or performance when employees perceived that they were subject to unfair or ambiguous supervisory feedback;
- employees' perceptions of the attainability of their work goals, and of the extent of overlap of their assigned areas of responsibility and control, moderated the relationship (in the first survey only) between their perceived extent of participation in safety-related decision-making and their organisational commitment. These findings were consistent with the theoretical propositions of Emmanuel et al (1991), who recommended budget attainability and 'responsibility-control overlap' as important criteria for control systems to be effective;
- the relationship between employees' perceived extent of participation in general work-related decision-making and their satisfaction therewith was moderated by three out of the four 'managerial control system' variables; and
- employees' perceptions of the fairness of their supervisors' evaluation styles, and of the extent of overlap of their assigned areas of responsibility and control, moderated the relationship (in the first survey only) between their perceived extent of participation in general work-related decision-making and their organisational commitment.

The explanatory and exploratory moderated multiple regression analyses both identified moderating effects by the 'managerial control system' set of variables, but on separate

relationships. These results thus suggested that employees' perceptions of aspects of the organisations' managerial control system moderated some of the relationships between employees' perceived extent of participation, and their work-related attitudes and performance. Such moderating effects occurred in respect of the effects of both financial and decisional participation. Further, the 't-values' for the respective interaction terms indicated that each of the four constituent variables of this set ('Perceived Attainability of Employee Goals', 'Perceived Fairness of Supervisory Evaluation', 'Perceived Extent of Overlap of Employee's Assigned Areas of Responsibility and Control' and 'Perceived Extent of Feedback Relating to Employee's Performance') individually exerted significant moderating effects.

The results of testing for moderating effects by the consolidated 'Perceived Managerial Commitment to Integrated Employee Participation' ('PERMCOP') variable, within this exploratory section, was also reported in chapter 13 (see table 13.10 for the detailed results). Six such effects were found. The exploratory research findings thus suggested that employees' perceptions of the level of managerial commitment moderated a number of the relationships between 'integrated' employee participation and the effects thereof. Such moderating effects occurred in respect of the effects of both financial and decisional participation elements. The results also suggested that the moderating impacts may have been exerted on both the effects of participation on satisfaction therewith, as well as on the effects of participation on organisational commitment. These findings were consistent with those of previous researchers. Kelly and Kelly (1991), Wallace and France (1973) and White (1979b), for instance, all found that the outcomes of employee participation programmes were significantly affected by employees' perceptions of managerial and chief executive officers' attitudes towards the initiatives.

The above discussion has been restricted to the moderating effects of the 'personality', 'managerial control system', and

'managerial commitment' variables. While a number of the moderating effects identified were significant, the 'changes in r-squared' were seldom greater than 0.01. However the 'changes in r-squared' achieved by the 'main effects' of introducing these variables into the regression equations were usually of a considerably higher magnitude. Two examples of this are presented here. Table 15.1 compares the 'main effect' and 'moderating effect' changes in 'r-squared', extracted from the moderated multiple regression report (see appendix D-1) of 'PFNPAR' ('Perceived Extent of Financial Participation', independent variable) and 'JOBSAT' ('Job Satisfaction', dependent variable). Table 15.2 provides the same comparison in respect of the moderated multiple regression report (see appendix D-4) of 'PPAGWD'('Perceived Extent of Participation in General Work-Related Decision-Making', independent variable) and 'JOBSAT' ('Job Satisfaction', dependent variable).

Table 15.1

Summary of 'Main Effects' and 'Moderating Effects' (1st Survey)
Independent Variable: 'PFNPAR' ('Perceived Extent of Financial Participation')
Dependent Variable: 'JOBSAT' ('Job Satisfaction')

CATEGORY OF MODERATOR VARIABLES	CHANGE IN R-SQUARED	F-VALUE
Main Effect:		
'PERSONALITY'	0.007	1.637
'MANAGERIAL CONTROL SYSTEM'	0.121	22.161 **
'MANAGERIAL COMMITMENT'	0.125	92.347 **
Moderating Effect:		
'PERSONALITY'	0.002	0.211
'MANAGERIAL CONTROL SYSTEM'	0.013	2.450 #
'MANAGERIAL COMMITMENT'	0.000	0.083

** = p < 0.001
# = p < 0.05

Table 15.2

Summary of 'Main Effects' and 'Moderating Effects' (1st Survey)
Independent Variable: 'PPAGWD' ('Perceived Extent of Participation in General Work-Related Decision-Making')
Dependent Variable: 'JOBSAT' ('Job Satisfaction')

CATEGORY OF MODERATOR VARIABLES	CHANGE IN R-SQUARED	F-VALUE	
Main Effect:			
'PERSONALITY'	0.007	1.392	
'MANAGERIAL CONTROL SYSTEM'	0.091	16.810	**
'MANAGERIAL COMMITMENT'	0.114	88.279	**
Moderating Effect:			
'PERSONALITY'	0.009	2.195	@
'MANAGERIAL CONTROL SYSTEM'	0.017	3.276	#
'MANAGERIAL COMMITMENT'	0.002	1.126	

** = p < 0.001
# = p < 0.05
@ = p < 0.10

Tables 15.1 and 15.2 reflect that the 'main effects' of introducing the 'personality', 'managerial control system' and 'managerial commitment' variables were, with one exception, of considerably higher magnitude than the subsequent 'moderating effect' of those variables within the same stepwise regressions.

Thus it appeared that while significant moderating effects had been identified, far greater proportions of the variances in the dependent variables were generally explained by the 'main effects' of these same 'personality', 'managerial control system', and 'managerial commitment' factors. The following section will incorporate a discussion of these 'main effects', within the evaluation of the exploratory path analysis results.

15.3.3 DISCUSSION OF THE RESULTS OF TESTING THE PATH MODEL OF INTEGRATED EMPLOYEE PARTICIPATION

This section discusses the results of testing the path model of integrated employee participation, which have already been presented in chapter 13. This path model differed from the

original 'Model of Integrated Employee Participation (incorporating moderating effects)', described in chapter 8, by incorporating only direct effects between variables. The model was tested longitudinally (i.e. at both points in time), on the whole sample as well as on each stratum of the organisational hierarchy.

It was noted that the model, when tested on the whole organisation, was found to generally explain a greater proportion of the variance in the dependent variables in the second survey than in the first. Thus the model's explanatory power appeared to increase over the ten-month period between the surveys. The reasons for this were not immediately clear, although it was speculated that the attainment of political democratic rights by the (black) majority of the workforce during the period may have contributed to this effect (South Africa's first all-race democratic elections were held during the intervening period). It was therefore possible that such workers may have become more 'democratically conscious' by the second survey date. Thus on that occasion participation at the workplace may have become a more relevant and material issue for the majority of the workforce.

Whatever the reason for the increase in the model's explanatory power, its consistent ability to explain the dynamics, and to predict the outcomes, of 'integrated' employee participation schemes was noted. The results of testing the model on the whole sample, and on each level of the hierarchy, will now be discussed in sequence.

15.3.3.1 Discussion of the Results of Testing the Path Model on the Whole Sample

The structural equations derived from the tests on the first and second survey's data-sets, in respect of the whole samples, were reported in chapter 13 (see tables 13.13 and 13.14 for the detailed results). These findings provided some differences from the hypothesised path model. For example:

- employees' perceived extent of participation in general work-related decision-making failed to 'predict' levels

of perceived managerial commitment to integrated participation at either point in time;

- a number of the 'managerial control system' variables ('Perceived Work Target Attainability', 'Perceived Extent of Overlap of Employee's Assigned Areas of Responsibility and Control', and 'Perceived Extent of Feedback Relating to Employee's Performance') failed to predict scores of employees' satisfaction with financial participation;
- employees' perceptions of managerial commitment to integrated participation failed to predict scores of employees' satisfaction with participation in work-related decision-making;
- certain hypothesised predictor variables within the path model failed to predict job satisfaction scores at either point in time. These were: employees' perceived extent of financial participation, their perceived extent of participation in safety-related decision-making, their perceived extent of participation in work target setting, and their perceived extent of feedback received relating to their performance; and
- contrary to hypothesised relationships within the path model, employees' satisfaction with participation in work-related decision making, and their perceived attainability of their work goals, failed to predict their 'consolidated' performance scores at either point in time.

Nevertheless, the significant predictor variables in the five structural equations of the model accounted for significant proportions of the variances in the respective dependent variable scores. The exploratory path analysis findings thus supported the proposal that schemes of 'integrated employee participation' (allowing both financial and decisional participation by workers) enhanced both employees' job satisfaction and their performance. These effects were achieved through the following interrelationships between variables:

- employees' perceived extent of financial participation, and their perceived extent of decision-making

participation, were directly and positively related to their satisfaction with financial and decisional participation respectively;

- satisfaction with each participation element (financial and decision-making) was directly and positively associated with job satisfaction;
- job satisfaction was directly and positively associated with employee's performance;
- employees' perceived extent of participation in general work-related decision-making was directly and positively associated with job satisfaction; and
- employees' satisfaction with financial participation was directly and positively related to their performance.

Thus employees' performance was significantly enhanced by 'integrated schemes of participation', and this was achieved by an improvement in job satisfaction. These findings were consistent with proposals within Porter and Lawlers' (1968) model of motivation (see chapter 3). They did not, however, support Herzberg's (1966) two-factor theory of motivation (also discussed in chapter 3), in that 'contingent pay' was established in this study to be positively related to job satisfaction. Herzberg (1966) suggested that pay was only a 'hygiene factor' and was, as such, incapable of motivating staff.

Managerial communication and control system aspects impacted significantly on both employee job satisfaction and their performance. Also, employees' perceptions of managerial commitment to participation were found to significantly enhance their own satisfaction with financial participation, but not their own satisfaction with decisional participation. No similar reported research finding could be located, and this therefore required interpretation. It was suspected that managerial commitment was not related to employees' satisfaction with decisional participation because of a possible lack of direct contact between top management and workers. Rather, it was likely that relationships between employees and their immediate supervisors would more directly

impact on employee attitudes in a participative environment. This was supported by the significant relationship between employees' perceived fairness of supervisory evaluation and their satisfaction with decision-making participation.

Employees' perceptions of managerial commitment to participation was itself significantly and positively related to employees' perceived extent of participation in all aspects of participation (except in general work-related decision making). This finding suggested that employees perceived that management was inclined only to support specific participation initiatives, that could be clearly defined and implemented.

Arising from the above analysis of the data, a revised path model of integrated employee participation was developed. The major amendments to the original model were the removal of those relationships that had failed to be supported in both the first and second surveys. The amended path model for the whole organisation is presented in figure 15.1.

Having tested the path model on the whole sample, and having derived an amended model from the results as described above, the procedure was then repeated for each stratum of the organisational hierarchy. The results of these analyses will be discussed in the following sub-sections. Detailed discussions of the results of testing each structural equation within the model will not be provided in respect of these tests of each stratum (the detailed results are available in chapter 13). Rather, the discussions will focus on the support achieved for the model in the tests, the differences between the findings for each stratum, and the possible reasons for such differences.

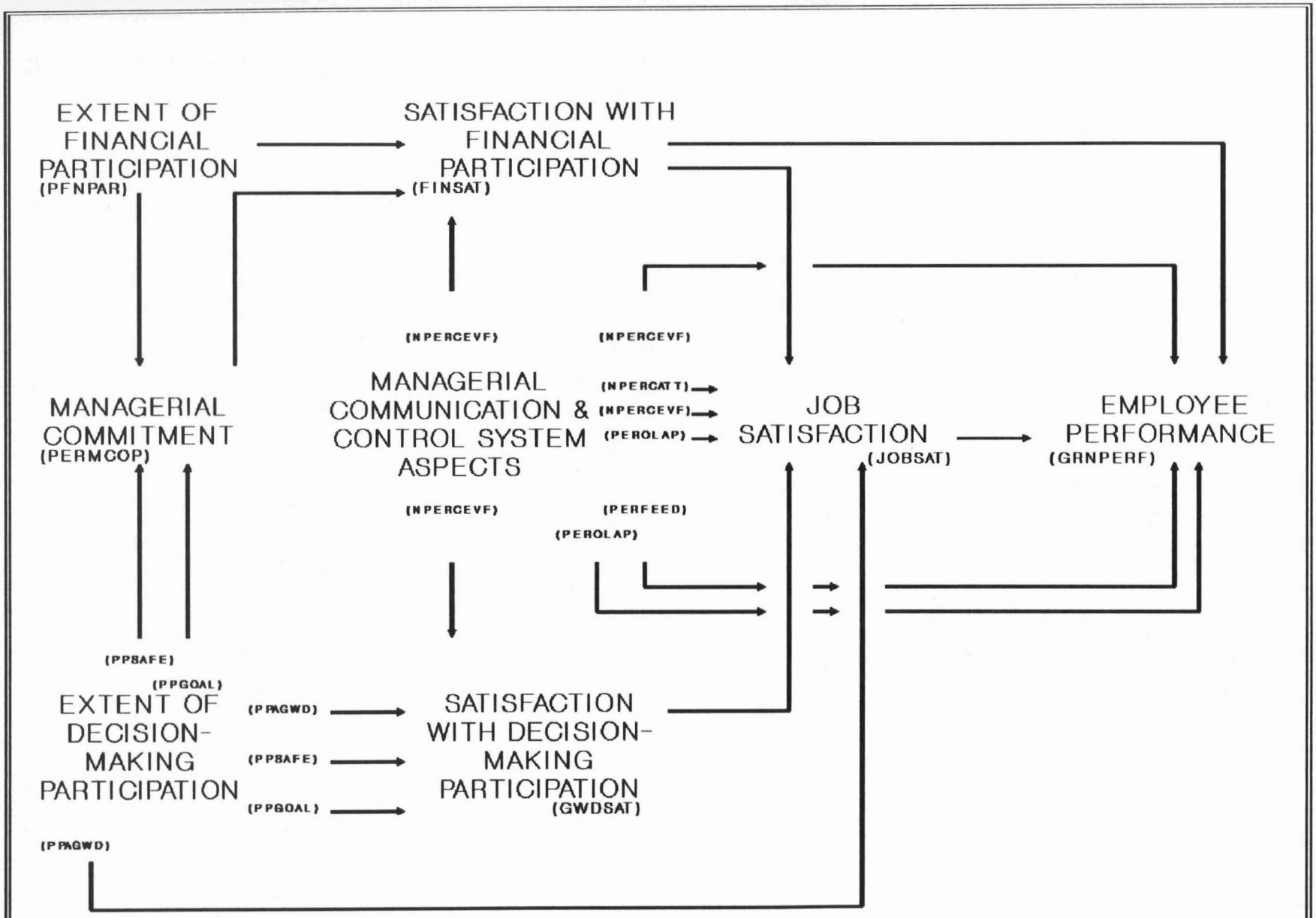

Figure 15.1 Revised Path Model (Whole Sample)

15.3.3.2 Discussion of the Results of Testing the Path Model on the Management Stratum

The exploratory path analysis findings for the 'Management'-level stratum supported the proposal that schemes of 'Integrated Employee Participation' enhanced both employees' job satisfaction and their performance. For these personnel, however, these effects were achieved through the financial participation programme exclusively. The following interrelationships between variables were significant:

- management-level employees' perceived extent of financial participation was directly and positively related to their satisfaction therewith;
- their satisfaction with financial participation was directly and positively associated with their job satisfaction; and
- job satisfaction was directly and positively associated with their performance.

Thus management-level employees' performance was only indirectly enhanced by 'integrated schemes of participation', through the improvement of job satisfaction.

These findings also seemed to suggest that pay (at least that of a contingent nature) was a motivator of employees. As discussed in section 15.3.3.1 above, this was in contrast to the proposals of Herzberg (1966).

Two elements of the organisation's managerial communication and control system impacted significantly on managerial-employees' attitudes towards financial participation and their jobs. These were their perceived extent of overlap of their assigned areas of responsibility and control, and their perceived extent of feedback received relating to their performance.

These findings suggested that decisional participation failed to directly improve levels of job satisfaction or performance for managerial staff. This was in contrast to the findings for the whole organisation. It was suspected that this was because

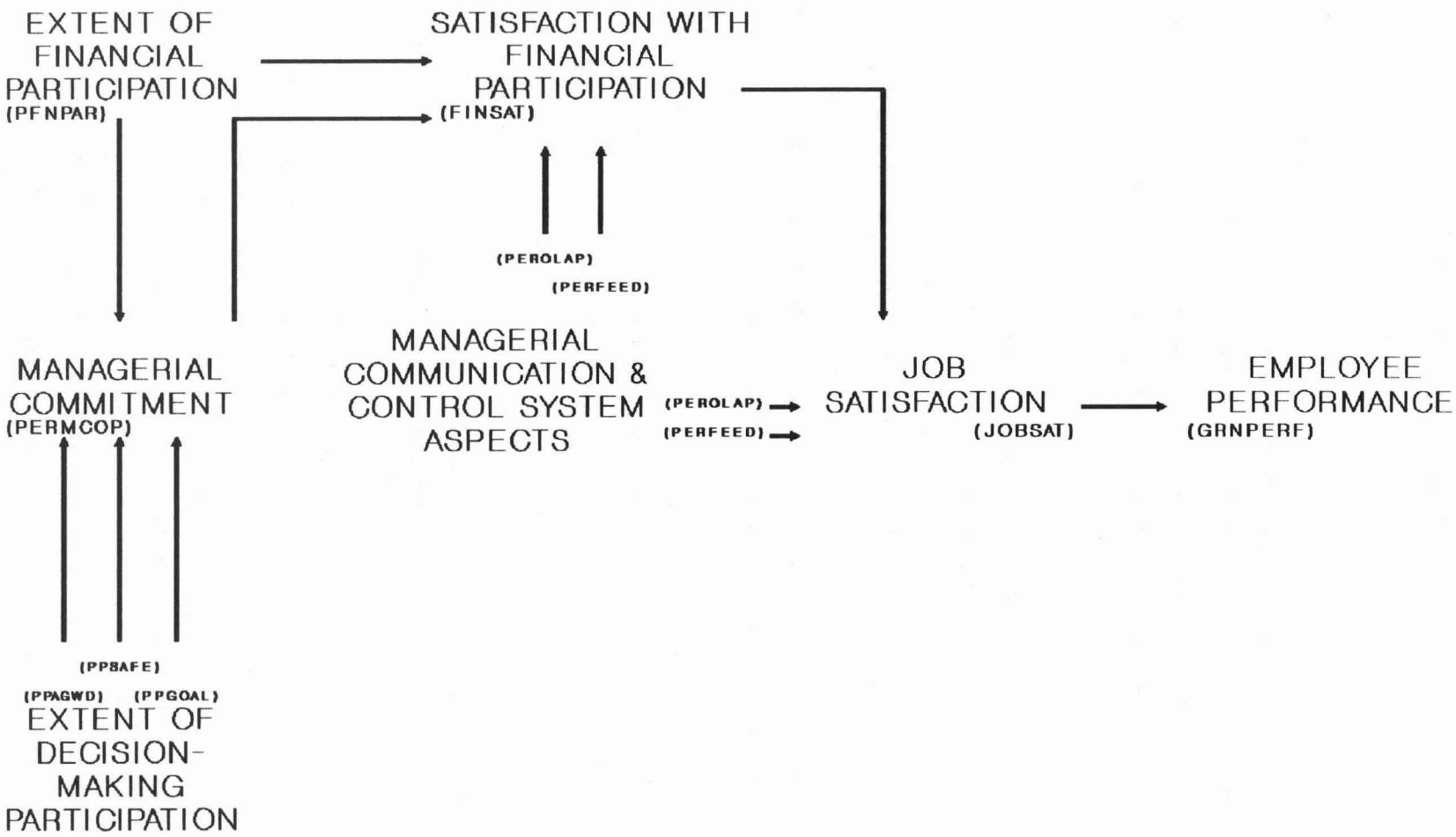

Figure 15.2 Revised Path Model (Management Stratum)

the specific types of decisional participation operated at the mine focused on operational issues, and involved primarily middle- and lower-level personnel.

Arising from the above analysis of the data, a revised path model of integrated employee participation, for the management stratum, was developed. As before, relationships that had failed to be supported in both the first and second surveys were removed. The amended path model for the management stratum is presented in figure 15.2.

15.3.3.3 Discussion of the Results of Testing the Path Model on the Supervisors and Artisans Stratum

The exploratory path analysis findings, in respect of the 'supervisors and artisans' stratum, failed to support the proposition that 'Integrated Employee Participation' enhanced job satisfaction and performance, for this category of personnel. The following interrelationships between variables were noted:

- 'supervisors and artisans'' perceptions of their extent of financial participation, and of their extent of decisional participation, were directly and positively related to their satisfaction with each type of participation; and
- their job satisfaction was directly and positively associated with their performance.

Thus for this level of the hierarchy, it was suggested that employees' performance was significantly affected by their job satisfaction. However neither of these outcome variables were found to be significantly associated with employees' perceived extent of, or satisfaction with, any aspect of the 'integrated participation' programme. This was inconsistent with the results previously obtained for the whole organisation, and for the management stratum. Differences of this nature were anticipated by commentators such as Kanter (1982) and Mulder (1971), who suggested that the effects of involvement schemes would be moderated by the level in the hierarchy of the participants.

At this level of the hierarchy, therefore, 'pay' was not found to be a motivator of employees, which was consistent with proposals of Herzberg (1966). Also, both 'intrinsic' and 'extrinsic' rewards, as contained within Porter and Lawlers' (1968) model of motivation (see chapter 3), were apparently not associated with improved levels of job satisfaction or performance at this level of the organisation. These findings were therefore unable to provide support for Porter and Lawlers' (1968) model, when applied to supervisors and artisans.

It was, however, noted that aspects of the organisation's managerial communication and control system aspects impacted significantly on 'supervisors and artisans'' attitudes and their performance, in a participative environment.

Arising from the above analysis of the data, a revised path model of integrated employee participation, for the supervisors and artisans stratum, was developed. The amended path model is presented in figure 15.3.

15.3.3.4 Discussion of the Results of Testing the Path Model on the Unskilled and Semi-Skilled Stratum

Due to the high proportion of the total samples represented by employees from this category (80.2% and 64.1% for the first and second surveys, respectively), the findings for these tests were similar to the 'whole sample' findings. Thus these results also supported the proposition that schemes of 'Integrated Employee Participation' enhanced both employees' job satisfaction and their performance. All the significant interrelationships noted in the 'whole organisation' analysis, between employees' perceived extent of participation, satisfaction therewith, job satisfaction and performance were also found to exist in these tests. However additional relationships were noted as follows:

- employees' perceived extent of financial participation was directly and positively associated with job satisfaction; and

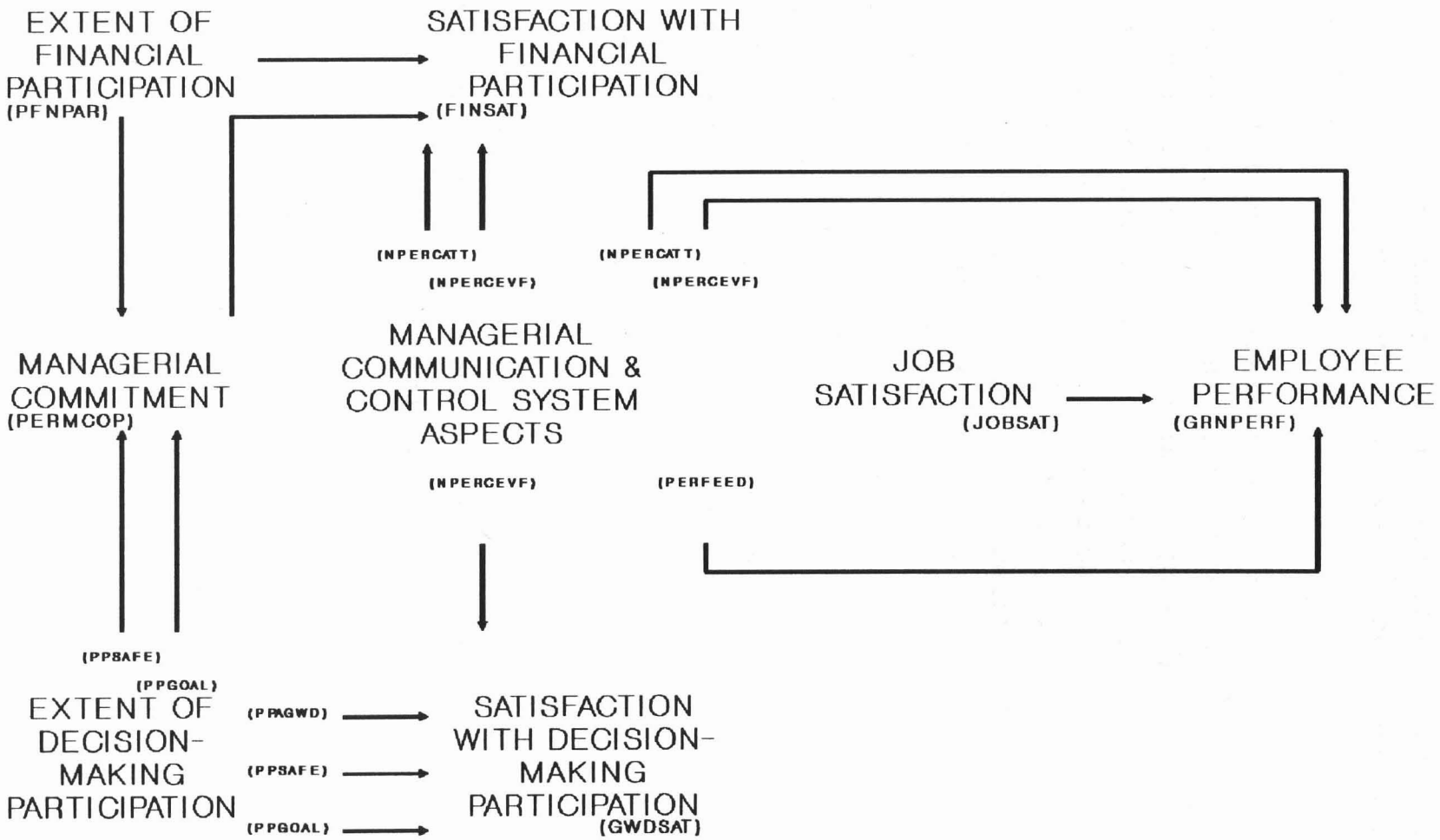

Figure 15.3 Revised Path Model (Supervisors and Artisans Stratum)

- employees' perceived extent of participation in specific forms of decision-making (safety-related and work-target setting) were directly and positively associated with job satisfaction.

Thus, for unskilled and semi-skilled employees, job satisfaction was directly and significantly enhanced by both their perceived extent of, and satisfaction with, financial and decisional participation. It would thus appear that for employees at this level, the 'integrated participation' programmes were significant contributors to levels of job satisfaction and performance. This was consistent with proposals within Porter and Lawlers' (1968) model of motivation (see chapter 3). Nevertheless, it was noted that the proportion of the variance of these outcome variables explained by the model, in the first and second surveys, was only 26.5% and 36.5% ($p < 0.001$) for job satisfaction, and 15.4% and 27.6% ($p < 0.001$) for 'consolidated performance'. Therefore while the model had significant explanatory power, there were a number of exogenous 'uncontrolled' factors that might further explain employees' levels of satisfaction and performance.

A revised path model of integrated employee participation, for this stratum, was developed from the above findings. The amended path model is presented in figure 15.4.

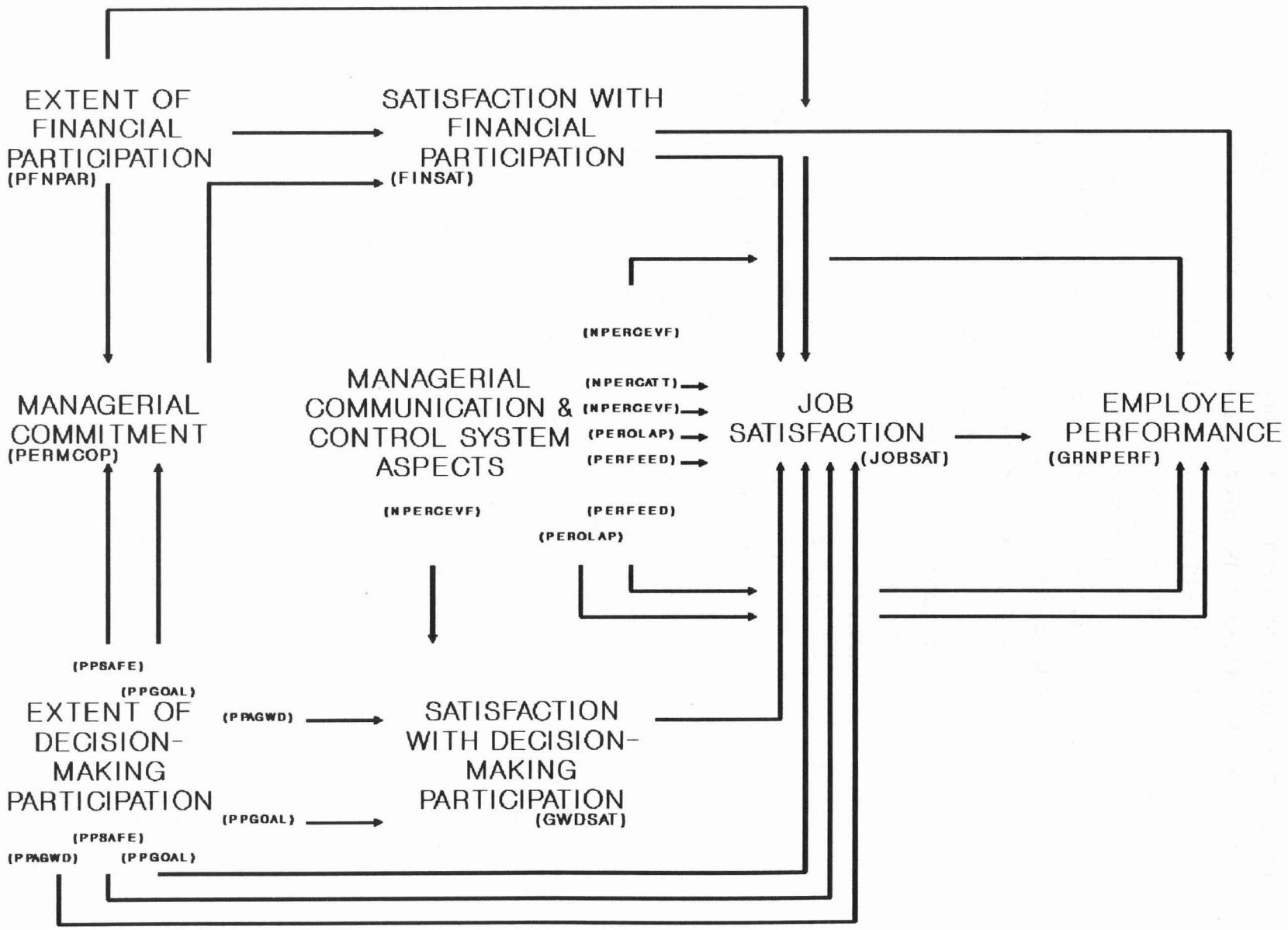

Figure 15.4 Revised Path Model (Unskilled and Semi-Skilled Stratum)

15.3.4 DISCUSSION OF THE EXPLORATORY RESULTS IN RELATION TO PROVIDING SUPPORT FOR THE 'MODEL OF INTEGRATED EMPLOYEE PARTICIPATION (INCORPORATING MODERATING EFFECTS)'

The exploratory results provided support for the 'Model of Integrated Employee Participation (incorporating moderating effects)' (see chapter 8) in a number of key areas:

- employees' perceived extent of participation, both financial and decision-making, were found to be 'predictors' of perceived managerial commitment to 'integrated participation';
- perceived levels of managerial commitment to 'integrated participation' were found to be associated with employees' satisfaction with the (financial element of the) programme. However the model suggested that this would be a moderating effect, whereas these findings suggested that the effect was in fact direct in nature;
- employees' perceptions of aspects of the organisation's managerial control system of communication and control were found to be related to both attitudinal and behavioural employee outcome variables. The model suggested that these would be moderating effects. However while both the explanatory and exploratory findings supported the existence of such moderating effects, the results of the path analysis also suggested the existence of 'main effects' by these variables; and
- the path analysis procedures did not specifically test for the moderating impact of 'hierarchy level' on the effects of participation. However the results obtained from testing the model on each stratum indicated that the effects of 'integrated participation' programmes, and the interrelationships between the path variables, varied between levels. This was consistent with the findings of Hrebiniak (1974), who found that the effects of employee participation programmes were moderated by the position in the hierarchy occupied by the personnel concerned.

Thus the exploratory findings of the study lent further support to aspects of the 'Model of Integrated Employee Participation (incorporating moderating effects)'. The

moderating impact of employees' biographical attributes (specifically their level in the hierarchy) was supported, as was the proposed impact of employees' perceived extent of participation on perceived managerial commitment to the schemes.

15.3.5 CONCLUSION

The exploratory results of the study have, together with the hypothesis-testing results, provided considerable insight into the dynamics of employee financial- and decision-making participation schemes, when they are integrated in a gold-mining organisation. They also supported many theoretical propositions and prior research findings within the literature. However some of the results were unexpected. While the effects of 'integrated participation' programmes on employee attitudes and performance were generally as anticipated, variations existed at different levels in the organisation.

The following section will review the research findings in the context of current theories of employee participation, and will suggest implications thereof for future theory-building and research.

15.4 SUMMARY AND CONCLUSIONS

This section reviews and summarises the main themes and research findings of the study. In addition, the findings are evaluated in terms of the support they provide for the cognitive, contingency and affective explanatory models of participation discussed previously (see chapter 3).

15.4.1 THEMES AND FINDINGS - AN OVERVIEW AND CONCLUSIONS

The three main themes of the study - theoretical, methodological, and empirical will be summarised in the following sub-sections.

15.4.1.1 Theme 1: Theoretical

Chapter 1 highlighted a strong need for a study of this nature. While a number of theoretical postulations and

commentaries had been published about participation schemes in South Africa, there was a lack of in-depth empirical research on the dynamics and effects of such programmes. Within the South African gold-mining industry, where financial- and decision-making participation programmes are operated simultaneously, this need was particularly acute. While mine-management believed that the various involvement programmes had led to improved employee attitudes and productivity, there was no substantial empirical analysis to support this assertion, nor was there empirical evidence to indicate how such effects were achieved.

The aims of the theoretical theme were twofold. Firstly, it was intended to thoroughly review the literature on employee participation schemes. Secondly, and based on the findings of this literature review, it was intended to develop a model of 'integrated employee participation' that might be applicable to South African industry in general, and to the South African gold-mining industry in particular.

Chapters 2 to 7 reviewed the literature on participation schemes and their potential effects. Chapter 2 presented an overview of employee involvement programmes and highlighted the many variations practised both within South Africa and abroad. Chapters 3 and 4 reviewed, respectively, the literature on decision-making and financial participation schemes. Both of these chapters noted conflicting research results regarding the effects of employee involvement, and the circumstances under which employee attitudes and performance were enhanced in a participative environment. A contingency approach to the design of, and research into, employee involvement schemes was therefore suggested as an appropriate strategy.

Chapter 5 reviewed the literature on 'integrated' schemes of employee involvement (e.g. Scanlon plans), where financial- and decision-making participation programmes were combined. Chapter 6 extended the review to include the literature on the

relationship between employees' attitudes and their performance.

Chapter 7 reviewed the literature on potential moderators of the relationships between participation, work-related attitudes and employee performance. These were discussed under four main categories: employee biographical attributes, personality variables, managerial commitment to participation, and aspects of the organisation's managerial system of communication and control.

Arising from the in-depth literature review, a 'Model of Integrated Employee Participation (incorporating moderating effects)' was developed and presented in chapter 8. This model incorporated many of the theoretical propositions and research findings from the literature, including a number of potential moderating effects on the outcomes of 'integrated' participation initiatives. Thus the model was developed from a contingency perspective, and awaited empirical testing.

15.4.1.2 Theme 2: Methodological

The groundwork had thus been laid for the second theme. This was the methodological theme of the study. This incorporated the formulation of the research problem, and the research design. Six research subproblems, and eleven specific hypotheses, were formulated in chapter 9. The hypotheses were designed to test major proposals within the 'Model of Integrated Employee Participation (incorporating moderating effects)', as applied to the South African gold-mining industry.

A major objective of this theme was to include longitudinal tests of the hypotheses. This addressed reservations expressed by a number of prior researchers (e.g. Schuler, 1980) about the limitations of cross-sectional studies, and was aimed at investigating whether changes might be observed in the effects of 'integrated participation schemes' over time. The longitudinal research design, measuring instruments and proposed statistical methodology were described in chapter 10.

15.4.1.3 Theme 3: Empirical

Chapters 11 to 14 were concerned with the third theme, which was the empirical theme of the study. The main objectives of this theme were to report and interpret the research findings. Chapter 11 reported the results of tests undertaken to assess the reliability and validity of the study's questionnaire instruments. Chapter 12 reported the explanatory, hypothesis-testing research results, and chapters 13 and 14 described the exploratory analyses.

The exploratory analyses included the derivation, from the literature and the statistical results of the first survey, of a path model of 'integrated employee participation'. This model was then tested on the data from both surveys, for the whole company as well as for each of the three levels of the organisation's hierarchy.

Arising from the empirical findings obtained from the longitudinal analysis, the following conclusions were drawn:

- only some of the propositions within the 'Model of Integrated Employee Participation (incorporating moderating effects)' were supported by the findings of this study. Specifically, the proposed moderating effects within the model were either only partially supported, or not supported;
- arising from this evaluation of the model, and from the exploratory regression results for the first survey, it was apparent that a path-analytic exploration of the interrelationships between the variables might provide greater clarity as to the dynamics of participation schemes;
- the subsequently-developed path model was substantially supported for the 'whole sample'. The model was only partially supported, however, for the 'management' and 'supervisors and artisans' strata. It thus appeared that 'integrated participation' schemes may not enhance job satisfaction and performance at the higher levels of the organisational hierarchy, and that the scheme's effects may thus be moderated by employee seniority;

- for the largest stratum of the mine's employees (i.e. the 'unskilled and semi-skilled' workers), the effects of 'integrated participation' were found to be substantially as proposed by the model. Satisfaction with participation was positively and significantly associated with perceived extent of participation. This conclusion applied to both the financial- and decision-making elements of the schemes. Employees' perceptions of managerial commitment to 'integrated participation' also 'predicted' their satisfaction with financial participation, but this was not the case with regard to employees' satisfaction with decision-making participation. Job satisfaction and employee performance were also positively associated with perceived extent of participation and / or satisfaction therewith. Further, aspects of the organisation's system of managerial communication and control were found to significantly affect levels of job satisfaction and employee performance in the participative environment of the mine.

A significant finding of this study was the existence of direct and moderating impacts on employees' job satisfaction and performance by their perceptions of aspects of the mine's managerial communication and control system. Puxty (1993) stated that management accounting and control systems were designed to influence the internal processes of an organisation, by not only changing people's behaviour (through control techniques such as budgets), but also by changing their consciousness. This research provided support for this assertion, and indicated the value of further research into the appropriate design of control systems, in order to achieve an optimum set of attitudinal and behavioural outcomes for employees at all levels of the organisation's hierarchy.

15.4.2 IMPLICATIONS FOR CURRENT THEORIES OF EMPLOYEE PARTICIPATION

This section relates the research findings to each of the three categories of theoretical explanatory models of the effects of employee participation, discussed in section 2.7 of

chapter 2. These categories, as described by Miller and Monge (1986), were 'cognitive', 'contingency', and 'affective'. The objective of this evaluation is to assess whether such models might indicate the means by which 'integrated participation schemes', as applied in the South African gold-mining industry, lead to enhanced employee work-related attitudes and performance.

15.4.2.1 Implications for Cognitive Explanatory Models of the Effects of Employee Participation

As discussed in section 2.7.1 of chapter 2, cognitive models of participation propose that job satisfaction is not directly affected by employee participation. Rather, there exists an indirect effect, with employee productivity acting as an intervening variable. Models within this category therefore predict that there will be a stronger direct association (correlation) between participation and employee performance, than between participation and job satisfaction.

The results of this study did not support such predictions. Associations between employees' perceived extent of participation and job satisfaction were found to be consistently higher than those between participation and performance. For example, the correlation in the first survey between 'JOBSAT' ('Job Satisfaction') and 'PPAGWD' ('Perceived Extent of Participation in General Work-Related Decision-Making') was $r = 0.38$ ($p < 0.001$), and the correlation between 'JOBSAT' and 'SELPERF' ('Employees' Self-Rated Performance') was only $r = 0.25$ ($p < 0.001$). The correlation between 'JOBSAT' ('Job Satisfaction') and 'PFNPAR' ('Perceived Extent of Financial Participation') was $r = 0.30$ ($p < 0.001$).

Cognitive models suggest that employee participation increases employee satisfaction and productivity through the provision of specific job-relevant information. They thus also predict that participation in decision making will have a stronger positive impact on such outcome variables, when workers are involved in the making of decisions about which they have specific knowledge.

This research provided no support for these predictions, in the first survey. The correlation between 'JOBSAT' ('Job Satisfaction') and 'PPAGWD' ('Perceived Extent of Participation in General Work-Related Decision-Making') was $r = 0.38$ ($p < 0.001$), while the correlations between 'JOBSAT' and 'PPGOAL' ('Perceived Extent of Participation in Work Target Setting') and between 'JOBSAT' and 'PPSAFE' ('Perceived Extent of Participation in Safety-Related Decision-Making') were $r = 0.30$ and $r = 0.28$ ($p < 0.001$) respectively. The correlation between 'SELPERF' ('Employees' Self-Rated Performance') and 'PPAGWD' was $r = 0.25$ ($p < 0.001$), while the correlations between 'SELPERF' and 'PPGOAL', and between 'SELPERF' and 'PPSAFE' were $r = 0.22$ and $r = 0.19$ ($p < 0.001$) respectively. Thus perceived extent of participation in general work-related decision-making issues was, contrary to 'cognitive' model predictions, more strongly associated with job satisfaction and performance than was employees' perceived extent of participation in specific work-related issues.

The findings of the second survey provided some support for cognitive models, since the correlation between 'JOBSAT' ('Job Satisfaction') and 'PPGOAL' ('Perceived Extent of Participation in Work Target Setting') ($r = 0.40$, $p < 0.001$) was higher than that between 'JOBSAT' and 'PPAGWD' ('Perceived Extent of Participation in General Work-Related Decision-Making') ($r = 0.34$, $p < 0.001$). Nevertheless, in general the research results did not provide substantial support for cognitive explanatory models of participation, when applied to the South African gold-mining industry.

15.4.2.2 Implications for Contingency Explanatory Models of the Effects of Employee Participation

Contingency models of the effects of participation suggest that employee involvement will affect satisfaction and performance in different ways, for different people and in different organisational settings. Such models thus typically propose the existence of moderating effects on the outcomes of participation, by factors such as personality and biographical attributes of 'participating' employees, relationships between

workers and management, and specific types of decision-making.

This research provided support for a number of such contingency approaches. Employees' level in the organisational hierarchy was found to affect the relationships between participation, employee attitudes and performance. Employees' perceptions of managerial control and communication system factors, and of managerial commitment to 'integrated participation' moderated a number of the relationships between employees' perceived extent of participation, job satisfaction, and performance. Personality factors moderated a minority of the relationships studied.

Thus the research findings offered support for a contingency approach to explaining the effects of 'integrated participation programmes', when applied to the South African gold-mining industry.

15.4.2.3 Implications for Affective Explanatory Models of the Effects of Employee Participation

Contrary to the proposals of cognitive models of participation, discussed in section 15.4.2.1, above, affective models predict that employee involvement will exert a stronger effect on employees' satisfaction than on their productivity and performance. This is because such models are based on the proposition that participation directly satisfies workers' higher-order needs, which leads to enhanced job satisfaction. Affective models suggest that direct associations between participation and employee performance may not exist.

This research provided considerable support for affective explanatory models of employee participation, when applied to the 'integrated' schemes within the gold-mining industry. As detailed in section 15.4.2.1 above, correlations between employees' perceived extent of participation (whether decisional or financial) and their job satisfaction were consistently higher than correlations between perceived extents of participation and their performance.

The results of the exploratory path analysis procedures also supported this interpretation. For the largest, 'unskilled and semi-skilled' stratum, decisional-participation variables were 'predictors' of job satisfaction scores, but not of performance scores. Similarly, financial participation variables 'predicted' job satisfaction scores. Satisfaction with financial participation was found to be an intervening variable in the relationship between employees' perceived extent of financial participation and their performance.

The exploratory path analysis results for the 'management' and 'supervisors and artisans' strata further supported the theoretical propositions of affective models of participation. Performance scores for managerial personnel were not 'predicted' by any participation variables. Job satisfaction levels were, however, predicted by scores for financial participation variables. For supervisors and artisans, satisfaction with financial and decisional participation was significantly and positively associated with their perceived extent of each type of participation. This did not, however, extend through to exerting any significant effects on job satisfaction or performance scores.

Thus both affective and contingency approaches to explaining the effects of 'integrated participation' were supported by the research findings. Miller and Monge (1986, p 729) noted that cognitive, affective and contingency model-types were not mutually exclusive, and that participative processes might incorporate elements from all three approaches.

15.5 LIMITATIONS OF THE STUDY

The results of this study are consistent with much of the prior research into this topic, and mostly interpretable in terms of existing theory. However the practical significance thereof can still be debated. In terms of the correlations between variables (which seldom exceeded 0.35 - see appendix C), and the regression results, the bulk of the variance in variable scores was not accounted for by the hypothesised relationships. Nevertheless, as noted by Staw and Oldham :

> '... the field of organizational behavior and the social sciences in general survive and progress with such imprecision. Most correlations and differences between means reported in social science journals are of relatively small magnitude due to error in measurement, conceptual imprecision, competing situational forces, individual differences, and the stochastic nature of many of our behavioral effects' (1978, p 555).

Although the variances explained by some of the interactions between variables in this study may have been small, they were certainly of theoretical significance and, it is suggested, of practical use to management as well, especially when viewed against the backcloth of a longitudinal research design.

Limitations of this research study were identified in section 10.10 of chapter 10, and will not be discussed in detail again here. The limitations noted were in respect of the restriction of the study to a single organisation, the consequent potential lack of generalisability of the findings, and the restriction of the research to specific attitudinal and behavioural outcome variables.

Further, as discussed in chapter 11, the results of the factor analyses had produced inconsistent factor loadings for certain variables. These were only to be incorporated within the exploratory section of the research. Accordingly, it was decided to retain these variables within the study but to qualify the exploratory findings accordingly.

It was also noted that, due to unavoidable practical limitations, the sample sizes for the 'management' and 'supervisors and artisans' strata of the hierarchy were smaller than the sample size of the 'unskilled and semi-skilled' stratum. Under these circumstances, the results of the analyses relating to the 'management' and 'supervisors and artisans' strata should be regarded as being more tentative in nature.

A further caveat to the research findings is that, with the exception of employees' supervisor-rated performance scores, all data were self-reported. This limitation of attitudinal research was also identified by Drago & Wooden (1991) in their study of participatory management. They noted, as an example of this problem, that people who desired participation had a tendency to claim that they already had it.

It was also noted that during the period of this research, economic conditions in South Africa, and employment opportunities in particular, were poor. Keller (1984) noted that under such circumstances, low performers and other workers who may desire to leave the organisation may have to stay in their current employment, against their will. They thus have to tolerate any stress associated with their work, and it is likely that job satisfaction levels will correspondingly fall.

A further limitation of the study, imposed by the researcher, was the recursive nature of the path model developed and tested within the exploratory section of the research. This was defended (see chapter 13) on the grounds of parsimony.

15.6 RECOMMENDATIONS FOR FURTHER RESEARCH

This section briefly recommends areas for further research, indicated by the results of this study.

Future research efforts could be directed at evaluating whether the effects of participation schemes on job satisfaction, performance and absenteeism vary under different economic conditions.

Further studies on this subject should also extend the testing of the models devised herein to other mining organisations, and indeed to firms outside the industry altogether. Future research should also include an evaluation of the effects of participation in other specific work-related decision-making areas, relative to the organisations and industries concerned. With the completion of each additional study, the body of

knowledge available to subsequent researchers will thus accumulate, and greater clarity as to the effects and dynamics of 'integrated participation schemes' will be achieved.

Future researchers may also wish to test non-recursive models of employee participation, to assess whether they possess greater explanatory powers than the recursive models evaluated in this study.

15.7 CONCLUSION

The findings of this study aid in an improved understanding of employee participation schemes. In particular, they contribute to the knowledge on how 'Integrated Participation Schemes' operate, within the South African gold-mining industry, in the enhancement of employee job satisfaction and performance.

The findings indicated that 'integrated' participation schemes, incorporating financial- and decision-making elements, impacted on workers' job satisfaction, performance and turnover in ways that were consistent with affective and contingency theoretical models of participation.

A number of conclusions of practical importance regarding the implementation of 'integrated participation schemes' arise from this research:

- the results suggested that 'intrinsic' and 'extrinsic' control strategies and incentives, designed to enhance employees' job satisfaction and performance, are not mutually exclusive. Managers can thus provide more job autonomy to their subordinates and at the same time give the subordinates more material benefits. The results give support for the simultaneous introduction of financial and decisional participation programmes in the gold-mining industry;
- the findings highlighted the need for management to carefully design the managerial communication and control aspects studied here, and also to consider the broader issue of the need to explore for other factors that will lead to effective participation - job satisfaction and

job satisfaction - performance relationships. It appears desirable that management should emphasise the legitimacy and importance of work-targets (Ivancevich, 1972; Steers and Porter, 1972). Such goals can be reinforced by suitable performance - reward contingencies, and by the regular feedback of performance reports to employees. The enhancement of employee attitudes and performance in a participative climate will be further aided by unambiguous and unbiased supervisory feedback, and by ensuring that employees are provided with the necessary authority and control to achieve their assigned objectives;

it appears that managers should monitor employee attitudes regularly so as to identify whenever changes to attitudinal responses to goal setting and participation occur. Whenever such programmes become discredited in the eyes of employees, attitudes and performance could be seriously jeopardised;

it also appears that job level has important effects on workers' attitudes and performance levels in a participative environment. 'Integrated schemes' of participation may not achieve significantly higher levels of satisfaction or performance amongst middle- or upper-managerial staff. It may therefore be appropriate to consider different forms of financial incentives or decision-making participation programmes for application to different levels of the organisation; and

finally, it is incumbent on top management to continuously 'reinforce' their perceived commitment, in the eyes of the workforce, to the concept and philosophy of participative management. This would appear to be particularly important in terms of enhancing the effects of the financial incentive elements of participation schemes. In terms of enhancing the effects of the decision-making participation elements, such demonstrated commitment would appear to be required from employees' immediate superiors, in terms of their supervisory style, provision of information feedback, and in the setting of

work targets that are perceived by the workforce to be reasonably attainable.

South African firms are likely to continue to introduce employee participation programmes in the future. This trend towards economic democracy may be viewed by some as an inevitable parallel to the political transformation in the country. Nevertheless, from management's perspective, such schemes should be designed in such a way as to optimise organisational effectiveness.

The study of the behavioural sciences can considerably assist in the achievement of this objective. Carefully managed initiatives such as employee participation schemes have the potential to aid management in their quest for satisfied and productive employees. However the key to achieving such an effective workforce may well be to avoid any 'off-the-shelf' prescribed approaches. Instead, it may be appropriate to develop 'customised' programmes, the structure of which are based on both sound theoretical propositions and consistently-supported empirical findings.

REFERENCES

Abdel-Halim, A.A. 1983. Effects of task and personality characteristics on subordinate responses to participative decision-making. Academy of management journal, vol. 26, p. 477-484.

Abdel-Halim, A.A. & Rowland, K.M. 1976. Some personality determinants of the effects of participation: a further investigation. Personnel psychology, vol. 29, p. 41-55.

Adams, J.S. 1965. Inequity in social exchange. Advances in experimental psychology. (Berkowitz, L., ed.). Academic Press.

Adams, J.S. & Rosenbaum, W.B. 1962. The relationship of worker productivity to cognitive dissonance about wage inequities. Journal of applied psychology, vol. 46, p. 161-164.

Adler, N.J. 1986. International dimensions of organisational behavior. Boston: PWS-Kent publishing company.

Aldag, R.J. & Brief, A.P. 1975. Impact of individual differences on employee affective responses to task characteristics. Journal of business research, vol. 4, p. 311-322.

Alutto, J.A. & Vredenburgh, D.J. 1977. Characteristics of decisional participation by nurses. Academy of management journal, vol. 20, p. 341-347.

Alutto, M. & Acito, F. 1974. Decisional participation and sources of job satisfaction: a study of manufacturing personnel. Academy of management journal, vol. 17, no. 1, March, p. 160-167.

Ambler, A. & Overholt, M. 1982. Are quality circles right for your company? Personnel journal, vol. 61, p. 829-831.

Anderson, B. & Shelly, R.K. 1970. Reactions to inequity II: a replication of the Adams experiment and a theoretical reformulation. ACTA sociologica, vol. 13, p. 1-10.

Anderson, N.H. 1961. Scales and statistics: parametric and non-parametric. Psychology bulletin, July, p. 305-316.

Anstey, M. 1990. Worker participation - South African options and experiences. Cape Town: Juta.

Anthony, W.P. 1978. Participative management. Reading, Mass.: Addison-Wesley.

Argyle, M., Gardner, G. & Cioffe, F. 1958. Supervisor methods related to productivity, absenteeism and labor turnover. Human relations, vol. 11, p. 23-40.

Argyris, C. 1952. The impact of budgets on people. Ithaca, New York: The Controllership Foundation Inc.

Argyris, C. 1970. Intervention theory and method. Mass.: Addison-Wesley.

Arrowood, A.J. 1961. Some effects on productivity of justified and unjustified levels of reward under public and private conditions. Unpublished doctoral dissertation. University of Minnesota.

Asher, H.B. 1983. Causal modelling. (2nd edition). Beverly Hills, CA: Sage.

Ashford, S.J. 1986. Feedback-seeking in individual adaptation: a resource perspective. Academy of management journal, vol. 29, no. 3, p. 465-487.

Atkinson, T.J. & Lefferts, E.A. 1972. The prediction of turnover using Herzberg's job satisfaction technique. Personnel psychology, vol. 25, p. 53-64.

Backer, W. 1973. Motivating black workers. Johannesburg: McGraw-Hill.

Baddon, L. 1989. Peoples capitalism? A critical analysis of profit sharing and employee share-ownership. London: Routledge.

Baird, L.S. 1976. Relationship of performance to satisfaction in stimulating and nonstimulating jobs. Journal of applied psychology, vol. 61, p. 721-727.

Barnett, J. 1978. Second reading of the 1978 Finance Bill. Hansard, 27 April, p. 1657.

Baron, R.A. 1983. Behaviour in organisations. Newton: Allyn & Bacon.

Bateman, T.S. & Organ, D.W. 1983. Job satisfaction and the good soldier: the relationship between affect and employee `citizenship'. Academy of management journal, vol. 26, p. 587-595.

Bateman, T.S. & Strasser, S. 1984. A longitudinal analysis of the antecedents of organizational commitment. Academy of management journal, vol. 27, p. 95-112.

Beach, D.S. 1970. Personnel: the management of people at work. New York: Macmillan.

Beardwell, I. & Holden, L. 1994. Human resource management: a contemporary perspective. London: Pitman.

Becker, H.S. 1960. Notes on the concept of commitment. American journal of sociology, vol. 66, p. 32-40.

Behrend, H. 1959. Financial incentives as a system of beliefs. British journal of sociology, vol. 2, p. 137-147.

Bell, W.D. & Hanson, C.G. 1984. Profit sharing and employee shareholding attitude survey. London: Industrial Participation Association.

Bell, W.D. & Hanson, C.G. 1987. Profit sharing and profitability: how profit sharing promotes success. London: Kogan Page.

Bendix, S. 1989. Industrial relations in South Africa. Cape Town: Juta.

Bernstein, P. 1979. Workplace democratization: its internal dynamics. New Brunswick, NJ: Transaction Books.

Bhagat, R.S. 1982. Conditions under which stronger job performance-job satisfaction relationships may be observed: a closer look at two situational contingencies. Academy of management journal, vol. 25, no. 4, p. 772-789.

Blanchflower, D.G. 1991. The economic effects of profit-sharing in Great Britain. International journal of manpower, vol. 12, no. 12, p. 3-9.

Blanchflower, D.G. & Oswald, A.J. 1987a. Profit sharing - can it work? Oxford economic papers, vol. 39, no. 1, p. 1-19.

Blanchflower, D.G. & Oswald, A.J. 1987b. Shares for employees: A test of their effects. London, London School of Economics: Centre for Labour Economics.

Blau, P. 1964. Exchange and power in social life. New York: Wiley.

Blood, M.R. 1969. Relationships among workers, backgrounds, attitudes, behaviours, and values. Illinois: University of Illinois.

Blood, M.R. & Hulin, C.L. 1967. Alienation, environmental characteristics, and worker responses. Journal of applied psychology, vol. 51, p. 284-290.

Bloom, S. 1986. Employee ownership and firm performance. Cambridge, Mass.: Harvard University Press.

Blumenfeld, W.E. & Leidy, T.E. 1969. Effectiveness of goal setting as a management device: research note. Psychological Reports, vol. 24, p. 24.

Boateng, P. 1989. The impact of privatization on worker attitudes. Kent: University of Kent.

Boreham, P. 1992. The myth of post-Fordist management: work organisation and employee discretion in seven countries. Employee relations, vol. 14, no. 2, p. 13-24.

Bradley, K. & Hill, S. 1983. `After Japan': the quality circle transplant and productive efficiency. British journal of industrial relations, vol. 21, p. 291-311.

Bradley, K. & Hill, S. 1987. Quality circles and managerial interests. Industrial relations, vol. 26, p. 68-82.

Brayfield, A. & Crockett, W. 1955. Employee attitudes and employee performance. Psychological bulletin, vol. 52, p. 396-424.

Breaugh, J.A. 1981. Relationships between recruiting sources and employee performance, absenteeism, and work attitudes. Academy of management journal, March, vol. 24, no. 1, p. 142-147.

Briggs, P. 1991. Organisational Commitment: the key to Japanese success? International comparisons in human resource management. (Brewster, C. & Tyson, S., Eds.). London: Pitman.

Brownell, P. 1982. Participation in the budgeting process - when it works and when it doesn't. Journal of accounting literature, March, p. 124-153.

Bruner, R.F. & Brownlee, R.E. 1990. Leveraged E.S.O.P.s, wealth transfers and 'shareholder neutrality'. Financial management, September, p. 59-74.

Buchko, A.A. 1993. The effects of employee ownership on employee attitudes: an integrated causal model and path analysis. Journal of management studies, vol. 30, no. 4, p. 633-657.

Buera, A. & Glueck, W. 1979. Need satisfaction of Libyan managers. Management international review, vol. 19, no. 1, p. 113-123.

Bullock, R.J. & Lawler, E.E. 1984. Gainsharing: a few questions, and fewer answers. Human resource management, vol. 23, p. 23-40.

Cable, J.R. 1986. Production, efficiency, incentives and employee participation: some preliminary results for West Germany. Kyklos, vol. 33, p. 100-121.

Cable, J. & Wilson, N. 1989. Profitsharing & productivity: an analysis of U.K. engineering firms. Economic journal, vol. 99, June, p. 366-375.

Calvin, A.D., Hoffman, F.K. & Hardin, E.E. 1957. The effect of intelligence and social atmosphere on group problem solving behavior. Journal of social psychology, vol. 45, p. 61-74.

Campbell, D.T. & Fiske, D.W. 1959. Convergent and discriminant validation by the multitrait-multimethod matrix. Psychological bulletin, vol. 56, p. 81-105.

Campbell, D.J. & Gingrich, K.F. 1986. The interactive effects of task complexity and participation on task performance: a field experiment. Organizational behavior and human decision processes, vol. 38, p. 162-180.

Carroll, S.J. & Schneier, C.E. 1982. Performance appraisal and review systems. Glenview, IL: Scott, Foresman.

Carroll, S.J. & Tosi, H.L. 1970. Goal characteristics and personality factors in a management by objectives program. Administrative science quarterly, vol. 15, p. 295-305.

Casey, B., Lakey, J. & White, M. 1992. Payment systems: a look at current practice. Research series no. 5. Department of Employment, Policy Studies Unit.

Chang, S. 1990. E.S.O.P.s and shareholder wealth: an empirical investigation. Financial management, Spring, p. 48-58.

Chapanis, A. 1964. Knowledge of performance as an incentive in repetitive, monotonous tasks. Journal of applied psychology, vol. 48, p. 263-267.

Chapman, L.J. & Chapman, J.P. 1969. Illusory correlation as an obstacle to the use of valid psycho-diagnostic signs. Journal of abnormal psychology, vol. 74, p. 271-280.

Charoux, J.A.E. 1984. The identification of black leadership potential. Unpublished doctoral dissertation. University of South Africa.

Chenhall, R.H. & Brownell, P. 1988. The effect of participative budgeting on job satisfaction and performance: role ambiguity as an intervening variable. Accounting, organizations and society, vol. 13, no. 3, p. 225-233.

Cherrington, D.J. 1973. The effects of a central incentive-motivational state on measures of job satisfaction. Organizational behaviour and human performance, vol. 10, p. 271-289.

Cherrington, D.J., Reitz, H.J. & Scott, W.E. 1971. Effects of contingent and non-contingent reward on the relationship between satisfaction and task performance. Journal of applied psychology, vol. 55, p. 531-536.

Chetty, D. 1994. Worker participation as a component of democracy. Natal mercury, 10 August, p. 6.

Child, J. 1984. Organisation. (2nd edition). London: Harper and Row.

Coch, L. & French, R.P. 1948. Overcoming resistance to change. Human relations, vol. 1, p. 512-532.

Cohen, J. & Cohen, P. 1983. Applied multiple regression/ correlation analysis for the behavioral sciences. (2nd edition). New Jersey: Lawrence Erlbaum Associates.

Coldwell, D.A.L. 1979. Role conflict and job satisfaction in black industrial workers: an investigation of the validity and interrelation of these constructs by the causal inference technique and a phenomenological approach. Unpublished doctoral thesis. University of South Africa.

Coldwell, D.A.L. 1982. The wastage and retention of key personnel: towards a model of propensity to leave. South African journal of labour relations, vol. 6, No. 1. p. 66-78.

Coldwell, D.A.L. 1992. Management participation programmes versus union influence: Is there a trade-off? South African journal of labour relations, vol. 16, no. 2, p. 65-70.

Cole, R.E. 1981. Value of quality control circles for U.S. work organizations. Transportation research news, vol. 95, p. 14-17.

Collard, R. & Dale, B. 1989. Quality circles. Personnel management in Britain. (Sisson, K., ed.). Oxford: Basil Blackwell.

Conte, M. & Tannebaum, A.J. 1978. Employee owned companies: is the difference measurable? Monthly labor review, vol. 101, no. 7, p. 23-28.

Cook, D.M. 1967. The effect of frequency of feedback on attitudes and performance. Journal of accounting research (supplement), vol. 5, p. 213-224.

Cordova, E. 1982. Workers' participation in decision within enterprises: recent trends and problems. International labour review, vol. 121, no. 2.

Cormack, G. 1990. The S.A.C.T.W.U. co-operative. Worker participation - South African options and experiences. (Anstey, M., ed.). Cape Town: Juta.

Cotton, J.L., & Tuttle, J.M. 1986. Employee turnover: A meta-analysis and review of implications for research. Academy of management review, vol. 11, p. 55-70.

Cotton, J., Volhath, D., Froggath, K.L., Lengnick-Hall, M.L. & Jennings, K.R. 1988. Employee participation: diverse forms and different outcomes. The academy of management review, vol. 13, January, p. 8-23.

Cowley, T. 1992. Employee equity participation schemes. Unpublished masters dissertation. University of the Witwatersrand.

Crabbs, R.A. 1973. Work motivation in the culturally complex Panama Canal Company. Academy of management proceedings, p. 119-126.

Cronbach, L.J. 1951. Coefficient alpha and the internal structure of tests. Psychometrika, vol. 16, p. 297-334.

Cronbach, L.J. & Meehl, P.E. 1955. Construct validity in psychological tests. Psychological bulletin, vol. 52, p. 281-302.

Crosby, P.B. 1979. Quality is free. New York: McGraw-Hill.

Cummings, T.G. & Molloy, E.S. 1977. Improving productivity and the quality of work life. New York: Praeger.

Curry, J.P., Wakefield, D.S., Price, J.L. & Mueller, C.W. 1986. On the causal ordering of job satisfaction and organizational commitment. Academy of management journal, vol. 29, no. 4, p. 847-858.

Dachler, H.P & Mobley, W.H. 1973. Construct validation of an instrumentality-expectancy task-goal model of work motivation. Journal of applied psychology, vol. 58, p. 397-418.

Daniel, W. & McIntosh, N. 1972. The right to manage? London: MacDonald.

Davis, K. 1963. The case for participative management. Business horizons, vol. 6, p. 55-60.

Deci, E.L. 1975. Intrinsic motivation. New York: Plenum.

Decoster, D.T. & Fertakis, J.P. 1968. Budget-induced pressure and its relationship to supervisory behavior. Journal of accounting research, Autumn, p. 237-246.

Dewar, S. 1990. Total worker involvement at Toyota. Worker participation - South African options and experiences. (Anstey, M. Ed.). Cape Town: Juta.

Dewe, P., Dunn, S. & Richardson, R. 1988. Employee share option schemes: why workers are attracted to them. British journal of industrial relations, vol 26, p. 1-20.

Dickson, J.W. 1982. Participatory forums and influence. Academy of management journal, vol. 25, no. 4, p. 915-920.

Dore, R. & Sako, M. 1989. How the Japanese learn to work. London: Routledge.

Dossett, D.L., Latham, G.P. & Mitchell, T.R. 1979. Effects of assigned versus participatively set goals, knowledge of results, and individual differences on employee behaviour when goal difficulty is held constant. Journal of applied psychology, vol. 64, p. 291-298.

Douard, H. & Reynaud, J.D. 1980. Union-management conflicts over quality-of-working-life issues (France). Worker participation: success and problems. (Jain, H.C., ed.). New York: Praeger Publishers.

Doyle, R.J. 1983. Gainsharing - A total productivity approach. Journal of contemporary business, vol. 11, no. 2, p. 57-70.

Drago, R. & Wooden, M. 1991. The determinants of participatory management. British journal of industrial relations, no. 6, p. 177-204.

Driscoll, J.W. 1978. Trust and participation in organizational decision making as predictors of satisfaction. Academy of management journal, vol. 21, p. 44-56.

Drury, C. 1992. Management and cost accounting. (3rd edition). London: Chapman and Hall.

Duncan, C. 1988. Why profit related pay will fail. Industrial relations journal, vol. 19, no. 3, p. 186-200.

Dunn, L.F. & Youngblood, S.A. 1986. Absenteeism as a mechanism for approaching an optimal labor market equilibrium: an empirical study. The review of economics and statistics, vol. 68, p. 668-674.

Dunn, S., Richardson, R. & Dewe, P. 1990. The impact of employee share ownership on worker attitudes: a longitudinal case study. London: London School of Economics.

Emmanuel, C., Otley, D. & Merchant, K. 1991. Accounting for management control. (2nd edition). London: Chapman and Hall.

Emory, C.W. & Cooper, D.R. 1991. Business research methods. (4th edition). Homewood, IL: Irwin.

Erez, M., Earley, P.C. & Hulin, C.L. 1985. The impact of participation on goal acceptance and performance: a two-step model. Academy of management journal, vol. 28, no. 1, p. 50-66.

Erez, M. & Zidon, I. 1984. Effect of goal acceptance on the relationship of goal difficulty to performance. Journal of applied psychology, vol. 69, p. 69-78.

Erwin, A. 1983. The remuneration package: a survival or living wage. Journal of the industrial relations research unit, University of Stellenbosh, vol. 3, p. 54-60.

Estrin, S., Grout, P. & Wadhwani, S. 1987. Profit sharing and employee share ownership. Economic policy, April, p. 14-62.

Estrin, S., Jones, D. & Svejnar, J. 1987. The productivity effects of workers participation. Journal of comparative economics, March, p. 40-61.

Estrin, S. & Wilson, N. 1988. The micro-economic effects of profit-sharing: the British experience. London: Centre for labour economics, London School of Economics.

Etzioni, A. 1961. A comparative analysis of complex organisations. New York: Free Press.

Ewing, D.W. 1971. Who wants corporate democracy? Harvard business review, September, p. 12.

Farrell, D. & Stamm, C.L. 1988. Meta-analysis of the correlates of employee absence. Human relations, vol. 41, p. 211-227.

Farris, G.F. 1969. Organizational factors and individual performance: a longitudinal study. Journal of applied psychology, vol. 53, p. 87-92.

Ferris, G.R. & Gilmore, D.C. 1984. The moderating role of work context in job design research: a test of competing models. Academy of management journal, vol. 27, no. 4, p. 85-892.

Fisher, C.D. 1980. On the dubious wisdom of expecting job satisfaction to correlate with performance. Academy of management review, vol. 5, p. 607-612.

Flanders, A. 1970. Management and unions: the theory and reform of industrial relations. London: Faber.

Fleishman, E.A. 1965. Attitude versus skill factors in work group productivity. Personnel psychology, vol. 18, p. 253-266.

Fletcher, C. 1990. The Anglo-American group's employee shareholding scheme. Worker participation: South African options and experiences. (Anstey, M., ed.). Cape Town: Juta & Co.

Florkowski, G.W. 1987. The organizational impact of profit-sharing. Academy of management review, vol. 12, p. 622-631.

Foa, W.M. 1957. Relation of workers expectation to satisfaction with supervisor. Personnel psychology, vol. 18, p. 253-266.

Fogarty, M.P. & White, M. 1988. Share schemes - as workers see them. London: Policy Studies Institute.

Fossum, J.A. 1979. The effects of positively and negatively contingent rewards and individual differences on performance, satisfaction, and expectations. Academy of management journal, September, vol. 22, no. 3, p. 577-589.

Fowler, R.L. 1985. Testing for substantive significance in applied research by specifying non-zero effect null hypotheses. Journal of applied psychology, vol. 70, p. 215-218.

Freeman, R.B. & Medoff, J.L. 1984. What do unions do? New York: Basic Books.

French, J.L. & Rosenstein, J. 1984. Employee ownership, work attitudes and power relationships. Academy of management journal, vol. 27, no. 4, p. 861-869.

French, J.R.P., Israel, J. & As, D. 1960. An experiment on participation in a Norwegian factory. Human relations, vol. 13, p. 3-19.

French, J.R.P., Kay, E. & Meyer, H.H. 1966. Participation and the appraisal system. Human relations, vol. 19, p. 3-19.

Frohlich, D. & Krieger, H. 1990. Technological change and worker participation in Europe. New technology, work and employment, Autumn, vol. 5, no. 2.

Frost, C.H., Wakely, J.H. & Ruh, R.A. 1974. The Scanlon plan for organisation development: identity, participation, and equity. East Lansing: Michigan State University Press.

Galanter, M. 1980. Psychological induction into the large group: findings from a modern religious sect. American journal of psychiatry, vol. 137, p. 1574-1579.

Gerhart, B.A. & Milkovich, G.T. 1990. Organizational differences in managerial compensation and financial performance. Academy of management journal, vol. 33, no. 4, p. 663-691.

Gibson, R.O. 1966. Toward a conceptualization of absence behavior. Administrative science quarterly, vol. 11, p. 107-133.

Gill, C. 1993. Technological change and participation in work organisation: recent results from a European survey. International journal of human resource management, May, vol. 4, no. 2.

Glass, G.V. 1976. Primary, secondary, and meta-analysis of research. Educational researcher, vol. 5, no. 10, p. 3-8.

Glick, W.H., Jenkins, G.D. & Gupta N. 1986. Method versus substance: how strong are underlying relationships between job characteristics and attitudinal outcomes? Academy of management journal, vol. 29, no. 3, p. 441-464.

Goodman, P.S. & Moore, B.E. 1976. Factors affecting acquisition of beliefs about a new reward system. Human relations, vol. 29, p. 571-588.

Gordon, L.A. & Pound, J. 1989. E.S.O.P.s and corporate control. Journal of employee ownership law and finance, Fall, p. 63-73.

Gowler, D. 1969. Determinants of the supply of labour to the firm. Journal of management studies, vol. 6, p. 73-95.

Grayson, D. 1984. Payment systems for the future. Employment gazette, March, p. 121-125.

Green, F.B. & Hatch, E. 1990. Involvement and commitment in the workplace: a new ethic evolving. S.A.M. advanced management journal, vol. 55, p. 8-12.

Greenberg, J. & Liebman, M. 1990. Incentives: the missing link in strategic performance. The journal of business strategy, July, p. 8-11.

Greene, C.N. 1973. Causal connections among managers' merit pay, job satisfaction, and performance. Journal of applied psychology, vol. 58, p. 95-100.

Greenland, P.B. 1983. Key to success for Westinghouse's quality circles. The Maryland workplace, vol. 5, p. 1-3.

Greller, M.M. 1980. Evaluation of feedback sources as a function of role and organisational level. Journal of applied psychology, vol. 65, p. 24-27.

Griffin, R.W. 1988. Consequences of quality circles in an Industrial setting. Academy of management journal, vol. 31, no. 2, p. 338-358.

Grove, H.D. & Savich, R.S. 1979. Attitude research in accounting: a model for reliability and validity considerations. The accounting review, vol. 54, no. 3, July, p. 522-537.

Guilford, J.P. 1965. Fundamental statistics in psychology and education. (4th edition). New York: McGraw-Hill.

Gurdon, M. 1978. The structure of ownership: implications for employee influence and organizational design. Unpublished doctoral dissertation, Cornell University.

Hackett, R.D. & Guion, R.M. 1985. A reevaluation of the absenteeism - job satisfaction relationship. Organizational behavior and human decision processes, vol. 35, p. 340-381.

Hackman, J.R. & Lawler, E.E. 1971. Employee reactions to job characteristics. Journal of applied psychology, vol. 55, p. 256-286.

Haire, M., Ghiselli, E.E. & Porter, L.W. 1965. Cultural patterns in the role of the manager. Industrial relations, February, vol. 2, no. 2, p. 95-117.

Hammer, T. 1991. Gainsharing. Motivation and work behavior. (5th edition). (Steers, R.M. & Porter, L.W., Eds.). New York: Mcgraw Hill.

Hammer, T.H., Lanau, J.C. & Stern, R.N. 1981. Absenteeism when workers have a voice: the case of employee ownership. Journal of applied psychology, vol. 66, p. 561-573.

Hammer, T.H. & Stern, R.N. 1980. Employee ownership: implications for the organizational distribution of power. Academy of management journal, vol. 23, p. 78-100.

Hammer, T.H., Stern, R.N. & Gurdon, M.A. 1982. Workplace ownership and attitudes toward participation. Workplace democracy and social change. (Lindenfield F. & Rothschild-Whitt J., eds.). Boston: Porter Sargent.

Hanson, C. & Watson, R. 1989. Profit sharing and company performance: some empirical evidence for the U.K.. Management research news, vol. 12, no 1, November, p. 24-25.

Hanson, C. & Watson, R. 1990. Profit sharing and company performance: some empirical evidence for the U.K.. New forms of ownership (Jenkins, G. & Poole, M., eds.) London: Routledge.

Hays, W.L. 1973. Statistics for the social sciences. New York: Holt, Rinehart and Winston.

Heckscher, C. 1988. The new unionism. New York: Basic Books.

Hegewisch, A. 1991. The decentralisation of pay bargaining: European comparisons. Personnel review, vol. 20, no. 6, p. 28-35.

Heneman, H.G. 1974. Comparisons of self and superior ratings of managerial performance. Journal of applied psychology, vol. 59, no. 5, p. 638-642.

Herzberg, F.H. 1966. Work and the nature of man. New York: World Publishing Company.

Herzberg, F., Mausner, B., Peterson, R.O. & Capwell, D.F. 1957. Job attitudes: review of research and opinion. Pittsburgh: Psychological Service of Pittsburgh.

Herzberg, F.H., Mausner, B. & Snyderman, B.S. 1959. The motivation to work. New York: Wiley.

Hill, S. 1991. Why quality circles failed but total quality management might succeed. British journal of industrial relations, December, vol. 29, no. 4, p. 541-568.

Hill, J.M.M. & Trist, E.L. 1953. A consideration of industrial accidents as a means of withdrawal from the work situation. Human relations, vol. 6, p. 357-380.

Hines, G.H. 1973. Achievement, motivation, occupations and labor turnover in New Zealand. Journal of applied psychology, vol. 58, no. 3, p. 313-317.

Hines, G.H. 1974. Sociocultural influences on employee expectancy and participative management. Academy of management journal, vol. 17, no. 2, p. 334-339.

Hirschman, A.O. 1970. Exit, voice, and loyalty. Cambridge, MA: Harvard University Press.

Hochner, A. & Granrose, C.S. 1985. Sources of motivation to choose employee ownership as an alternative to job loss. Academy of management journal, vol. 28, p. 860-875.

Hoerr, J. 1989a. Is teamwork a management plot? Mostly not. Business week, 20 February, p. 70.

Hoerr, J. 1989b. The payoff from teamwork. Business week, 10 July, p. 56-62.

Hofstede, G.H. 1967. The game of budget control. Assen: Van Gorcuum & Co.

Hofstede, G. 1980a. Motivation, leadership, and organisation: do American theories apply abroad? Organizational dynamics, Summer, p. 42-63.

Hofstede, G.H. 1980b. Culture's consequences: international differences in work-related values. Sage Publications.

Hopkins, S.A. 1989. An integrated model of management and employee influences on just-in-time implementation. S.A.M. advanced management journal, March, vol. 54, no. 2, p. 15-20.

Hoppock, R. 1935. Job satisfaction. New York: Harper.

Hopwood, A.G. 1976. An accounting system and managerial behaviour. Hampshire: Saxon House.

Horwitz, F. 1988. Employee stakeholding - an alternative form of organisational governance? South African journal of labour relations, vol. 12, p. 5-14.

Hovels, B. & Nas, P. 1980. Effectiveness of works councils in the Netherlands. Worker participation: success and problems, (Jain, H.C., ed.). New York: Praeger publishers.

Howell, P., Strauss, J. & Sorensen, P.F. 1975. Research note: cultural and situational determinants of job satisfaction among management in Liberia. Journal of management studies, May, p. 225-227.

Hrebiniak, L.G. 1974. Effects of job level and participation on employee attitudes and perceptions of influence. Academy of management journal, vol. 17, no. 4, December, p. 649-662.

Hulin, C.L. 1971. Individual differences and job enrichment: the case against general treatment. New Perspectives in Job Enrichment. (Maher, J.R., ed.), New York: Van Nostrand Reinhold Co.

Hulin, C.L. & Blood, M.R. 1968. Job enlargement, individual differences and worker responses. Psychological bulletin, vol. 69, p. 41-55.

Human, L. & Icely, N. 1987. Trends in the attitudes of white workers to the upward occupational mobility of blacks: findings from two companies. South African journal of labour relations, vol. 11, p. 4-23.

Hundal, P.S. 1969. Knowledge of performance as an incentive in repetitive industrial work. Journal of applied psychology, vol. 53, p. 226-244.

Hunt, J.G., Osborn, R.N. & Larson, L.L. 1975. Upper level technical orientation and first level leadership within a noncontingency and a contingency framework. Academy of management journal, vol. 18, p. 475-488.

Huysamen, G.K. 1976. Introductory statistics and research design. Pretoria: University of South Africa.

I.D.S. Study 520. 1976. P.R.P. grows as tax relief doubles. December.

Iaffando, M.T. & Muchinsky, P.M. 1985. Job satisfaction and job performance: a meta-analysis. Psychological bulletin, vol. 97, p. 251-73.

Ilgen, D.R., Fisher, C.D. & Taylor, M.S. 1979. Consequences of individual feedback on behaviour in organisations. Journal of applied psychology, vol. 64, p. 349-371.

Ilgen, D.R., Peterson, R.B., Martin, B.A. & Boeschen, D.A. 1981. Supervisor and subordinate reactions to performance appraisal sessions. Organizational behaviour and human performance, vol. 28, p. 311-330.

I.D.E. (International Democracy in Europe Research Group). 1979. Participation: formal rules, influence and involvement. Industrial relations, vol. 18, p. 273-294.

International Labour Organisation. 1981. Workers participation in decisions within undertakings. Geneva.

Ivancevich, J.M. 1972. A longitudinal assessment of management by objectives. Administrative science quarterly, vol. 17, p. 126-138.

Ivancevich, J.M. 1977. Different goal setting treatments and their effects on performance and job satisfaction. Academy of management journal, vol. 20, p. 406-419.

Ivancevich, J.M. 1979. An analysis of participation in decision making among project engineers. Academy of management journal, vol. 22, p. 253-269.

Ivancevich, J.M. & Mcmahon, J.T. 1982. The effects of goal setting, external feedback and self-generated feedback on outcome variables: a field experiment. Academy of management journal, vol. 25, p. 359-372.

Jain, H., Vanachter, O. & Gevers, P. 1980. Success and problems with participative schemes - the case of Belgium. Worker participation: success and problems. (Jain, H.C., ed.). New York: Praeger publishers.

Jain, H.C. 1980. Worker participation: success and problems. New York: Praeger Publishers.

James, D. & Horwitz, F.M. 1992. Actual and preferred worker participation: a study of the propensity of managers and workers to participate. South African Journal of Labour Relations, vol. 16, no. 2, p. 3-31.

Jenkins, G.C. & Gupta, N. 1982. Financial incentives and productivity improvement. Journal of contemporary business, vol. 11, no. 2, p. 43-56.

Jenkins, G. & Poole, M. 1990. New forms of ownership; management & employment. London: Routledge.

Jensen, M. & Meckling, W. 1979. Rights & Production functions. Journal of business, October, p. 469-506.

Jevons, W.S. 1883. Methods of social reform. London:. MacMillan.

Jones, G. & Maree, J. 1989. Worker participation and industrial democracy: two South African case studies. South african journal of industrial relations, vol. 9.

Jordan, P.C. 1986. Effects of an extrinsic reward on intrinsic motivation: a field experiment. Academy of management journal, vol. 29, p. 405-412.

Kaiser, H.F. & Rice, J. 1974. Little Jiffy, Mark IV. Educational and psychological measurement, vol. 34, p. 111-117.

Kanter, R. 1982. Dilemmas of participative management. Organizational dynamics, p. 5-29.

Kanter, R. 1983a. Frontiers for strategic human resources planning and management. Human resource management, vol. 22, p. 9-21.

Kanter, R.M. 1983b. The change masters: innovation and entrepreneurship in the American Corporation. New York: Simon & Schuster.

Katzell, R. & Yankelovich, D. 1975. Work, productivity and job satisfaction. New York: The Psychological Corporation.

Keller, R.T. 1984. The role of performance and absenteeism in the prediction of turnover. Academy of management journal, vol. 27, no. 1, p. 176-183.

Kelly, F.D., Beggs, D.L., McNeil, K.A., Eichelberger, A. & Lyon, J. 1969. Research design in the behavioral sciences: multiple regression approach. Carbondale, Ill.: Southern Illinois Press.

Kelly, J. 1982. Scientific management, job redesign and work performance. London: Academic Press.

Kelly, J. & Kelly, C. 1990. `Them & us': social psychology and `The new industrial relations'. British journal of industrial relations, vol. 29, no. 1, March, p. 25-48.

Kenis, I. 1979. Effects of budgetary goal characteristics on managerial attitudes and performance. The accounting review, October, vol. 54, p. 707-721.

Kerlinger, F. 1973. Foundations of behavioral research. New York: Holt, Rinehart and Winston.

Kim, J. 1975. Factor Analysis. Statistical package for the social sciences. (2nd edition). (Nie, N.H., Hull C.M., Jenkins, J.G., Steinbrenner, K. & Bent, D.M., eds.). New York: Mcgraw-Hill.

Kim, J. & Kohout, F.J. 1990. Special topics in general linear models. Statistical package for the social sciences. (2nd edition). (Nie, N.H., Hull C.M., Jenkins, J.G., Steinbrenner, K. & Bent, D.M., eds.). New York: Mcgraw-Hill.

Klein, K.J. 1987. Employee stock ownership and employee attitudes: a test for three models. Journal of applied psychology, vol. 72, p. 319-332.

Klein, K.J. & Hall, R.J. 1988. Correlates of employee satisfaction with stock ownership: who likes an E.S.O.P. most? Journal of applied psychology, vol. 73, p. 630-638.

Klein, K.J. & Rosen, C. 1986. Employee stock ownership in the United States. The organizational practice of democracy. (Stern, R.N. & McCarthy, S., eds.). Chichester: John Wiley.

Koch, J.L. & Steers, R.M. 1978. Job attachment, satisfaction, and turnover among public employers. Journal of vocational behavior, vol. 12, p. 119-128.

Kolb, D.A., Winters, S. & Berlew, D. 1968. Self-directed change: two studies. Journal of applied behavioral science, vol. 4, p. 453-473.

Koopman, A.D., Nasser, M.E. & Nel, J. 1987. The Corporate Crusaders. Johannesburg: Lexicon.

Kornhauser, A. & Sharp, A. 1932. Employee attitudes: suggestions from a study in a factory. Personnel journal, vol. 10, p. 393-401.

Kraut, A.I. 1975. Predicting turnover of employees from measured job attitudes. Organizational behavior and human performance, vol. 13, p. 233-243.

Kren, L. 1992. Budgetary participation and managerial performance: the impact of information and environmental volatility. The accounting review, vol. 67, no. 3, July, p. 511-526.

Krishnan, R. 1974. Democratic participation in decision making by employees in American corporations. Academy of management journal, vol. 17, No 2, p. 339-347.

Kruse, D. 1984. Employee ownership and attitudes: two case studies. Norwood PA: Norwood Editions.

La Mantia, C., Mackin, C. & Flannagan P.A. 1990. E.S.O.P.s and Corporate Finance Implications. Financial management, Spring, p. 75-81.

Lane, C. 1989. Management of labour in Europe. Aldershot: Edward Elgar.

Latham, G.P. & Locke, E.A. 1979. Goal setting - a motivational technique that works. Organisational dynamics, Autumn.

Latham, G.P., Mitchell, T.R. & Dossett, D.L. 1978. The importance of participative goal setting and anticipated rewards on goal difficulty and job performance. Journal of applied psychology, vol. 63, p. 163-174.

Latham, G.P. & Saari, L.M. 1979. The effects of holding goal difficulty constant on assigned and participatively set goals. Academy of management journal, vol. 22, p. 163-168.

Latham, G.P. & Steele T.P. 1983. The motivational effects of participation versus goal setting on performance. Academy of management journal, vol. 26, p. 406-417.

Latham, G.P. & Yukl, G.A. 1975. A review of research on the application of goal setting in organizations. Academy of management journal, December, vol. 18, no. 4, p. 824-845.

Latham, G.P. & Yukl, G.A. 1976. The effects of assigned and participative goal setting on performance and job satisfaction. Journal of applied psychology, vol. 61, p. 166-171.

Lawler, E.E. 1967. The multitrait-multitrater approach to measuring managerial job performance. Journal of applied psychology, vol. 51, p. 369-381.

Lawler, E.E. 1970. Job attitudes and employee motivation: theory, research and practice. Personnel psychology, vol. 23. p. 223-237.

Lawler, E.E. 1973. Motivation in work organizations. Monterey, CA: Brooks/Cole.

Lawler, E.E. 1977. Reward systems. Improving life at work. (Hackman, J.R. & Suttle, J.L., Eds.). Santa Monica, CA: Goodyear.

Lawler, E. 1986. High-involvement management. San Francisco: Jossey-Bass.

Lawler, E.E. 1988. Choosing an involvement strategy. The academy of management executive, vol. 2, no. 3, p. 197-204.

Lawler E.E. & Hackman, J.R. 1969. The impact of employee participation in the development of pay incentive plans: a field experiment. Journal of applied psychology, vol. 53, p. 467-471.

Lawler, E.E. & Hall, D. 1970. The relationships of job characteristics to job involvement, satisfaction, and intrinsic motivation. Journal of applied psychology, vol. 54, p. 305-312.

Lawler, E.E. & Mohrman, S.A. 1987. Quality circles: after the honeymoon. Organizational dynamics, vol. 15, no. 4, p. 42-54.

Lawler, E.E. & Mohrman, S.A. 1989. High-involvement management. Organisational dynamics, April, p. 27-31.

Lawler, E.E. & Porter, L.W. 1967. The effect of performance on job satisfaction. Industrial relations, vol. 7, p. 20-28.

Lawrence, L.C. & Smith, P.C. 1955. Group decision and employee participation. Journal of applied psychology, vol. 39, p. 334-337.

Leger, J. 1993. Mine safety rating system is seriously flawed. Business day, 18 May.

Lee, T.W. & Mowday, R.T. 1987. Voluntarily leaving an organization: an empirical investigation of Steers and Mowday's model of turnover. Academy of management journal, vol. 30, p. 721-743.

Leedy, P.D. 1993. Practical research - planning and design. New York: Macmillan Publishing Company.

Lewis, P. 1989. Employee participation in a Japanese owned British electronics factory: reality or symbolism? Employee relations, vol. 11, no. 1.

Li, C.C. 1975. Path analysis - a primer. Pacific Grove, California: The Boxwood Press.

Likert, R. 1932. A technique for the measurement of attitudes. Archives of psychology, no. 140. New York: Columbia University Press.

Likert, R. 1967. The human organization: its management and value. New York: McGraw-Hill.

Lillrank, P. & Kano, N. 1989. Continuous improvement: quality control circles in Japanese industry. Ann Arbor, Mich: Center for Japanese Studies, University of Michigan.

Lischeron, J.A. & Wall, T.D. 1975. Employee participation: an experimental field study. Human relations, vol. 28, p. 863-884.

Locke, E.A. 1968. Toward a theory of task motivation and incentives. Organizational behavior and human performance, vol. 3, p. 157-189.

Locke, E.A. 1976. The nature and causes of job satisfaction Handbook of industrial and organizational psychology. (Dunnette, M.D., ed.). Chicago: Rand McNally.

Locke, E.A. 1982. Relation of goal level to performance with a short work period and multiple goal levels. Journal of applied psychology, vol. 67, p. 512-514.

Locke, E.A. 1983. Employee motivation: a discussion. Journal of contemporary business, vol. 11, no. 2, p. 71-81.

Locke, E.A., Feren, D.B., McCaleb, V.M., Shaw, K.N. & Denny, A.T. 1980. The relative effectiveness of four methods of motivating employee performance. Changes in working life. (Duncan, K.D., Gruneberg, M.M., & Wallis, D., eds.). London: John Wiley & sons Ltd.

Locke, E.A., Latham, G.P. & Erez, M. 1988. The determinants of goal commitment. Academy of management review, vol. 13, no. 1, p. 23-39.

Locke, E.A. & Schweiger, D.M. 1979. Participation in decision making: one more look. Research in organizational behaviour, vol. 1, p. 265-339.

Locke, E.A., Schweiger, D.M. & Latham, G.P. 1986. Participation in decision making: when should it be used? Organizational dynamics, vol. 14, no. 3, p. 65-79.

London, M. & Oldham, G.R. 1977. A comparison of group and individual incentive plans. Academy of management journal, March, vol. 20, no. 1, p. 34-41.

Long, R.J. 1977. The effects of employee ownership on job attitudes and organizational performance: an exploratory study. Unpublished doctoral dissertation. New York State school of industrial and labor relations, Cornell University.

Long, R.J. 1978a. The effects of employee ownership on organizational identification, employee job attitudes, and organizational performance: a tentative framework and empirical findings. Human relations, vol. 31, no. 1, p. 29-48.

Long, R.J. 1978b. The relative effects of share ownership versus control on job attitudes in an employee-owned company. Human relations, vol. 31, p. 753-763.

Long, R.J. 1979. Desires for and patterns of worker participation in decision making after conversion to employee ownership. Academy of management journal, vol. 22, p. 611-617.

Long, R. 1980. Job attitudes and organizational performance under employee ownership. Academy of management journal, December, vol. 23, no. 4, p. 726-737.

Long, R.J. 1982. Worker ownership & job attitudes: a field study. Human relations, vol. 21, p. 196-215.

Lupton, T. & Bowey, A.M. 1983. Wages and salaries. Aldershot: Gower.

Luther, R. & Keating, P. 1992 Ending "Them and us": Profit-related pay and promotion of a community of interest in industry. Personnel review, vol. 21, no 4, p. 57-69.

Machin, J.L. 1983. Management control systems: whence and whither? New perspectives in management control, (Lowe, E.A. & Machin, J.L., eds.). London: Macmillan.

MacIntosh, N. 1992. Human relations and budgeting systems. Readings in accounting for management control. (Emmanuel, C., Otley, D. & Merchant, K., eds.) London: Chapman & Hall.

MacIntosh, J.C.C. 1984. The extension of financial reporting to employees: a theoretical and empirical analysis. Unpublished doctoral dissertation. University of South Africa.

Magee, B. 1973. Popper. London: William Collins and Co Ltd.

Magenau, J.M., Martin, J.E. & Peterson, M.M. 1988. Dual and unilateral commitment among stewards and rank-and-file union members. Academy of management journal, vol. 31, no. 2, p. 359-376.

Maller, J. 1988. E.S.O.P.'s fables. Johannesburg: Labour and Economic Research Centre.

Marchington, M., Goodman, J., Wilkinson, A. & Ackers, P. 1992. New developments in employee involvement. Research series 2. Manchester: School of Management Employment Department.

Marks, M., Mirvis, P., Hackett, E. & Grady, J. 1986. Employee participation in a quality circle program: impact on quality of work life, productivity, and absenteeism. Journal of applied psychology, vol. 71, p. 61-69.

Marrow, A.J., Bowers, D.B. & Seashore, S.E. 1967. Management by participation. New York: Harper and Row.

Maslow, A.H. 1943. A theory of human motivation. Psychological review, vol. 50, p. 370-396.

Mawhinney, T.C. 1975. Operant terms and concepts in the description of individual work behavior: some problems of interpretation, application, and evaluation. Journal of applied psychology, vol. 60, p. 704-712.

McCarty, P.A. 1986. Effects of feedback on the self-confidence of men and women. Academy of management journal, vol. 29, p. 840-847.

McKersie, R.B. 1986. The promise of gainsharing. I.L.R. report, vol. 24, p. 7-11.

McNichols, C.W., Stahl, M.J. & Manley, T.R. 1978. A validation of Hoppock's job satisfaction measure. Academy of management journal, vol. 21, no. 4, December, p. 737-742.

McShane, S.L. 1984. Job satisfaction and absenteeism: a meta-analytic re-examination. Canadian journal of administrative sciences, vol. 1, p. 61-77.

Meade, J.E. 1986a. Alternative systems of business organisation and workers remuneration. London: George Allen and Unwin.

Meade, J.E. 1986b. Different forms of share economy. London: Public Policy Centre.

Mento, A.J., Steel, R.P & Karren, R.J. 1987. A meta-analytic study of the effects of goal setting on task performance: 1966-1984. Organizational behavior and human decision processes, vol. 39, p. 52-83.

Meyer, H.H. 1975. The pay-for-performance dilemma. Organizational dynamics, vol. 3, p. 39-50.

Meyer, H.H., Kay, E. & French, J.R.P. 1965. Split roles in performance appraisal. Harvard business review, vol. 43, p. 123-129.

Mia, L. 1989. The impact of participation in budgeting and job difficulty on managerial performance and work motivation: a research note. Accounting, organizations and society, vol. 14, no. 4, p. 347-357.

Miles, R.E. 1975. Theories of management: implications for organizational behavior and development. New York: McGraw-Hill.

Miles, R.E. & Ritchie, J.B. 1971. Participative management: quality versus quantity. California management review, vol. 13, no. 4, p. 48-56.

Miller, L. 1965. The use of knowledge of results in improving the performance of hourly operators. Crotonville, New York: General Electric Company.

Miller, K. & Monge, P. 1986. Participation, satisfaction and productivity: a meta-analytic review. Academy of management journal, vol. 29, p. 727-753.

Millward, N., Stevens, M., Smart, D. & Hawes, W.R. 1992. Workplace industrial relations in transition. Aldershot: Dartmouth.

Miner, J.B. 1968. Management appraisal: a capsule review and current references. Business horizons, vol. 11, p. 83-96.

Mintzberg, H. 1979a. The structuring of organisations. New York: Prentice Hall.

Mintzberg, H. 1979b. An emerging strategy of "Direct" research. Administrative science quarterly, December, vol. 24.

Mitchell, G., Coldwell, D.A.L., Barnes, N.R., White, J.A.K., Khoza, E.H. & Seleka, F. 1988. Barriers to participation on four gold mines. Chamber of Mines of S.A. Research Organisation.

Mitchell, T.R. 1973. Motivation and participation: an integration. Academy of management journal, vol. 16, no. 4, December, p. 670-679.

Mitchell, T.R., Smyser, C.M., & Weed, S.E. 1975. Locus of control: supervision and work satisfaction. Academy of management journal, vol. 18, no. 3, September. p. 623-631.

Mobley, W.H. 1975. Job satisfaction and thinking of quitting. Columbia: University of South Carolina.

Mobley, W.H. 1977. Intermediate linkages in the relationship between job satisfaction and employee turnover. Journal of applied psychology, vol. 62, p. 237-240.

Mohrman, S.A. & Ledford, G.E. 1985. The design and use of effective employee participation groups: implications for human resource managers. Human relations, vol. 24, p. 413-428.

Moi, A. 1988. Motivation theories and black workers. South African journal of labour relations, vol. 12 p. 15-20.

Moodley, Y.S. 1992. Worker participation in industry - a radical critique. Unpublished masters dissertation. University of Natal.

Morris, J.H., Steers, R.M. & Koch, J.L. 1979. Influence of organization structure on role conflict and ambiguity for three occupational groupings. Academy of management journal, vol. 22, p. 58-71.

Motowidlo, S.J., Packard, J.S. & Manning, M.R. 1986. Occupational stress: its causes and consequences for job performance. Journal of applied psychology, vol. 71, p. 618-629.

Mowday, R.T. 1983. Beliefs about the causes of behaviour. The motivational implications of attribution processes. Motivation and work behaviour. (Steers, R.M. & Porter, L.W., eds.). New York: McGraw-Hill.

Mowday, R.T. 1991. Equity theory predictions of behavior in organisations. Motivation and work behavior. Singapore: Mcgraw-Hill.

Mowday, R.T. & Spencer, D.G. 1981. The influence of task and personality characteristics on employee turnover and absenteeism incidents. Academy of management journal, September, vol. 24, no. 3, p. 634-642.

Mowday, R.T., Steers, R.M., & Porter, L.W. 1979. The measurement of organizational commitment. Journal of vocational behaviour, vol. 14, p. 224-247.

Muchinsky, P.M. 1977. A comparison of within- and across-subjects analyses of the expectancy-valence model for predicting effort. Academy of management journal, vol. 20, p. 154-158.

Mulder, M. 1959. Power and satisfaction in task oriented groups. Acta psychologica, vol. 16, p. 178-225.

Mulder, M. 1971. Power equalization through participation. Administrative science quarterly, vol. 16, p. 31-38.

Munro, D. 1973. Motivation and the locus-of-control concept: a theoretical analysis and cross-cultural study. Unpublished doctoral thesis. London: Bedford College, University of London.

Munro, D. 1979. Locus of control attribution: factors among blacks and whites in Africa. Journal of cross-cultural psychology, vol. 10, p. 157-172.

Murray, D. 1990. The performance effects of participative budgeting: an integration of intervening and moderating variables. Behavioral research in accounting, vol. 2, no. 2, p. 104-123.

Murray, M. 1993. (Senior Lecturer, Mathematical Statistics, University of Natal.) Consultation regarding statistical research procedures, Minutes of meeting: March 15.

Nasser, M.E. & Nel, C. 1986. Economic participation in South Africa. Project free enterprise report. Pretoria: University of South Africa, School of Business Leadership.

Nel, P.S. 1984. A critical overview of the concept of democracy, industrial democracy, participation and representation. South African journal of labour relations, vol. 8.

Nie, N.H., Hull, C.M., Jenkins, J.G., Steinbrenner, K. & Bent, D.M. 1975. Statistical package for the social sciences. (2nd edition). New York: McGraw-Hill.

Nunns, C.G. & Argirys, L. 1992. Exploring manager-subordinate dyads: the moderating effect of supervisory support on the relationship between work locus of control and job involvement. South African journal of business management, vol. 23, p. 40-45.

Nuti, D.M. 1987. Profit sharing and employment: claims and overclaims. Industrial relations, vol. 2, no. 1, p. 18-29.

Organ, D.W. 1988. A restatement of the satisfaction-performance hypothesis. Journal of management, vol. 14, p. 547-557.

O'Reilly, C. 1989. Corporations, culture and commitment: motivation and social control in organisations. California management review, vol. 31, no. 4, p. 9-25.

O'Reilly, C.A. & Roberts, K.H. 1973. Job satisfaction among whites and non-whites. Journal of applied psychology, vol. 57, no. 3, p. 295-299.

O'Reilly, G.A., Parlette, G.N. & Bloom, J.R. 1980. Perceptual measures of task characteristics: the biasing effects of differing frames of reference and job attitudes. Academy of management journal, March, vol. 23, no. 1, p. 118-131.

Oldham, G.R. 1975. The impact of supervisory characteristics on goal acceptance. Academy of management review, vol. 18, no. 3, September, p. 461-475.

Organ, D.W. 1977. A reappraisal and reinterpretation of the satisfaction-cause-performance hypothesis. Academy of management review, vol. 2, p. 46-53.

Organ, D.W. 1988. A restatement of the satisfaction-performance hypothesis. Journal of management, vol. 14, no. 4, p. 547-557.

Otley, D.T. 1978. Budget use and managerial performance. Journal of accounting research, Spring, vol. 16, no. 1, p. 122-149.

Otley, D.T. & Berry, A.J. 1980. Control, organization and accounting. Accounting, organizations and society, vol. 5, no. 2, p. 231-244.

Otley, D.T. & Berry, A.J. 1994. Case study research in management accounting and control. Management accounting research, March, vol. 5, no. 1, p. 45-65.

Ouchi, W.G. 1981. Theory Z. Reading, MA.: Addison-Wesley.

Parker, J.W., Taylor, E.K., Barrett, R.S & Martens, L. 1959. Rating scale content III: relationships between supervisory- and self-ratings. Personnel psychology, September, vol. 12, p. 49-63.

Parker, M. 1985. Inside the circle. Detroit: South End Press.

Pascale, R. & Athos, A. 1982. The art of Japanese management. London: Allen Lane.

Patchen, M. 1965a. Labor-management consultation at T.V.A.: its impact on employees. Administrative science quarterly, vol. 10, no. 2.

Patchen, M. 1965b. Some questionnaire measures of employee motivation and morale. Ann Arbor: Survey Research Centre, University of Michigan.

Patchen, M. 1970. Participation, achievement, and involvement on the job. Englewood Cliffs, NJ: Prentice-Hall.

Paterson, T.T. 1972. Job evaluation. London: Business Books.

Patton, M.Q. 1987. How to use qualitative methods in evaluation. London: Sage publications.

Pearce, J.L. & Porter, L.W. 1986. Employee responses to formal performance appraisal feedback. Journal of applied psychology, vol. 71, no. 2, p. 211-218.

Pearce, J.L., Stevenson, W.B. & Perry, J.L. 1985. Managerial compensation based on organizational performance: a time series analysis of the effects of merit pay. Academy of management journal, vol. 28, no. 2, p. 261-278.

Peel, M.J., Groves, R.E.V. & Pendlebury, M.W. 1990. The impact of privatisation/share ownership of the financial awareness of employees. Management research news, vol. 13, no. 5, p. 1-3.

Peel, M.J., Pendlebury, M.W. & Groves, R.E.V. 1991. Employee share ownership, privatisation & internal financial reporting. Management accounting research, vol. 2, no. 2, p. 71-88.

Peters, T. & Waterman, R. 1982. In search of excellence: lessons from America's best run companies. New York: Harper and Row.

Peterson, R.B. & Sullivan, J. 1983. Applying Japanese management in the United States. Journal of contemporary business, vol. 11, no. 2.

Pierce, J.L. & Dunham, R.B. 1976. Task design: a literature review. Academy of management review, vol. 4, p. 83-97.

Pierce, J.L., Rubenfeld, S.A. & Morgan, S. 1991. Employee ownership: a conceptual model of process and effects. Academy of management review, vol. 16, no. 1, p. 121-144.

Pinder, C.C. 1984. Work motivation. Glenville, Ill.: Scott, Foresman.

Poole, M. & Jenkins, G. 1988. How employees respond to profit sharing. Personnel management, July, pp 30-34.

Poole, M. & Jenkins, G. 1990. The impact of economic democracy: profit-sharing and employee share-holding schemes. London: Routledge.

Poole, M. & Jenkins, G. 1991. The impact of profit-sharing and employee shareholdings schemes. Journal of general management, vol. 16, no. 3, Spring, p. 52-72.

Popper, K. 1972. The logic of scientific discovery. (3rd edition). London: Hutchinson.

Porter, L.W. & Lawler, E.E. 1968. Managerial attitudes and performance. Homewood, Ill.: Irwin.

Porter, L.W. & Steers, R.M. 1973. Organizational, work, and personal factors in employee turnover and absenteeism. Psychological bulletin, vol. 80, p. 151-176.

Porter, L.W., Lawler, E.E. & Hackman, R.J. 1975. Behaviour in organisations. New York: McGraw-Hill.

Powel, R.M. & Schlacter, J.L. 1971. Participative management: a panacea? Academy of management journal, vol. 14, June, p. 165-173.

Price, J.L. & Mueller, C.W. 1981. The study of turnover. New York: S.P. Medical and Scientific Books.

Price Waterhouse. 1991. Cranfield project on international strategic human resource management report. Cranfield: Cranfield School of Management.

Puffer, S.M. 1987. Prosocial behavior, noncompliant behavior, and work performance among commission salespeople. Journal of applied psychology, vol. 72, p. 615-621.

Pulakos, E.D. & Schmitt, N. 1983. A longitudinal study of a valence model approach for the prediction of job satisfaction of new employees. Journal of applied psychology, vol. 68, p. 307-312.

Puxty, A.G. 1993. The social and organizational context of management accounting. London: Academic Press Ltd.

Ramsay, H. 1992. Swedish and Japanese work methods - comparisons and contrasts. European participation monitor, vol. 3, no 1.

Ramsay, H., Hyman, J., Baddon, L., Hunter, L. & Leopold, J. 1992. Options for workers: owner or employee? New forms of ownership. (Jenkins, P. & Poole, M., eds.). London: Routledge.

Reinharth, L. & Wahba, M.A. 1975. Expectancy theory as a predictor of work motivation, effort expenditure, and job performance. Academy of management journal, vol. 18, no. 3, September, p. 520-523.

Reitz, H.J. 1975. The relative importance of five categories of needs among industrial workers in eight countries. Academy of management proceedings, p. 270-273.

Rhodes S.R. & Steers, R.M. 1981. Conventional vs worker-owned organizations. Human relations, vol. 34, p. 1013-1035.

Rhodes, S.R. & Steers, R.M. 1990. Managing employee absenteeism. Reading, Mass.: Addison-Wesley.

Richardson, R. & Nejad, A. 1986. Employee share ownership schemes in the U.K. - an evaluation. British journal of industrial relations, July, p. 233-250.

Robinson, B. 1990. Worker participation: trends in West Germany. Worker participation: South African options and experiences. (Anstey, M., ed.). Cape Town: Juta and Co Ltd.

Rockness, H.O. 1977. Expectancy theory in a budgetary setting: an experimental examination. The accounting review, October, p. 893-903.

Romzek, B.S. 1989. Personal consequences of employee commitment. Academy of management journal, vol. 32, no. 3, p. 649-661.

Rosen, B. & Jerdee, T.H. 1978. Effects of decision permanence on managerial willingness to use participation. Academy of management journal, vol. 21, p. 722-725.

Rosen, C. & Klein, K.J. 1983. Job creating performance of employee-owned firms. Monthly labor review, vol. 106, no 8, p. 15-16.

Rosen, C., Klein, K. & Young, K.M. 1983. Employee ownership in America: the equity solution. Lexington: Heath.

Rosen, C. & Quarry, M. 1987. How well is employee ownership working? Harvard business review, September, p. 126-132.

Rosenberg, R.D. & Rosenstein, E. 1980. Participation and productivity: an empirical study. Industrial and labor relations review, vol. 33, p. 355-368.

Rosenthal, R. 1979. The 'File Drawer Problem' and tolerance for null results. Psychological bulletin, vol. 86, p. 638-641.

Ross, I. & Zander, A. 1957. Need satisfaction and employee turnover. Personnel psychology, vol. 10, p. 327-338.

Rosse, J.G. & Miller, H.E. 1984. Relationship between absenteeism and other employee behaviors. Absenteeism: new approaches to understanding and measuring absence. (Goodman, P.S. & Atkins, R.S., eds.). San Francisco: Jossey-Bass.

Roy, D. 1952. Quota restriction and goldbricking in a machine shop. American journal of sociology, vol. 57, p. 427-442.

Ruh, R., Wallace, R. & Frost, C. 1973. Management attitudes and the Scanlon plan. Industrial relations, vol. 12, p. 282-288.

Ruh, R.A., White, J.K. & Wood, R.R. 1975. Job involvement, values, personal background, participation in decision making, and job attitudes. Academy of management journal, June, vol. 18, no. 2, p. 300-312.

Runyon, K.E. 1973. Some interactions between personality variables and management styles. Journal of applied psychology, June, vol. 57, p. 1-28.

Russell, R., Hochner, A. & Perry, S.E. 1979. Participation, influence and worker ownership. Industrial relations, vol. 18, no. 3, p. 330-341.

Russell, S. & Dale, B. 1989. Quality circles: a broader perspective. London: Advisory, Conciliation & Arbitration Service.

Salamon, M. 1987. Industrial relations theory and practice. London: Prentice Hall International.

Sales, S.M. 1966. Supervisory styles and productivity: review and theory. Personnel psychology, vol. 19, p. 275-294.

Sandler, B.E. 1974. Eclecticism at work: approaches to job design. American psychologist, vol. 29, p. 767-773.

S.A.S. Procedures Guide. 1990. (3rd edition). Cary, NC: S.A.S. Institute Inc.

Savage, P. 1988. Energising organisations through employee participation. Personnel management, July.

Scapens, R.W. 1990. Researching management accounting practice: the role of case study methods. British accounting review, vol. 22, p. 259-281.

Schein, E.H. 1980. Organizational Psychology. Englewood Cliffs, NJ: Prentice-Hall, Inc.

Schneider, B. & Dachler, P. 1978. A note on the stability of the job description index. Journal of applied psychology, vol. 63, p. 650-653.

Schuler, R.S. 1975. Role perceptions, satisfaction and performance: a partial reconciliation. Journal of applied psychology, vol. 60, p. 683-687.

Schuler, R.S. 1977. Role perceptions satisfaction and performance moderated by organizational level and participation in decision making. Academy of management journal, vol. 20, p. 159-164.

Schuler, R.S. 1980. A role and expectancy perception model of participation in decision making. Academy of management journal, vol. 23, p. 331-340.

Schuster, M.H. 1983. Forty years of Scanlon plan research: a review of the descriptive and empirical literature. International yearbook of organisational democracy. (Crouch, C. & Heller, F., eds.) p. 53-71.

Schuster, M. 1984. The Scanlon plan: a longitudinal analysis. Journal of applied behavioural science, vol. 20, p. 23-38.

Schwab, D.P. & Cummings, L.L. 1970. Theories of performance and satisfaction: a review. Industrial relations, vol. 9, p. 408-430.

Scott, W.E. & Cherrington, D.J. 1974. Effects of competitive, cooperative, and individualistic reinforcement contingencies. Journal of personality and social psychology, vol. 30, p. 748-758.

Searfoss, D.G. & Monczka, R.M. 1973. Perceived participation in the budget process and motivation to achieve the budget. Academy of management journal, vol. 16, no. 4, p. 541-554.

Semler, R. 1989. Managing without managers. Harvard business review, September.

Shalley, C.E., Oldham, G.R. & Porac, J.F. 1987. Effects of goal difficulty, goal-setting method, and expected external evaluation on intrinsic motivation. Academy of management journal, vol. 30, no. 3, p. 553-563.

Shalley, C.E. & Oldham, G.R. 1985. Effects of goal difficulty and expected external evaluation on intrinsic motivation: a laboratory study. Academy of management journal, vol. 28, no 3, p. 628-640.

Shaw, M.E. & Wright, J.M. 1967. Scales for the measurement of attitudes. New York: McGraw-Hill.

Shearer, R.L. & Steger, J.A. 1975. Manpower obsolescence: a new definition and empirical investigation of personal variables. Academy of management journal, vol. 18, no. 2, June, p. 263-275.

Shore, L.M. & Martin, H.J. 1989. Job satisfaction and organizational commitment in relation to work performance and turnover intentions. Human relations, vol. 42, p. 625-638.

Siegel, A. & Ruh, R. 1973. Job involvement, participation in decision making, personal background and job behaviour. Organizational behaviour and human performance, vol. 16, p. 318-327.

Simons, R. 1987. Planning, control, and uncertainty: a process view. Accounting and management: field study perspectives. (Bruns, W.J. & Kaplan, R.S., eds.). Cambridge, MA: Harvard University Press.

Skinner, B.F. 1953. Science and human behavior. New York: The Macmillan Company.

Smircich, L. & Chesser, R.J. 1981. Superiors' and subordinates' perceptions of performance: beyond disagreement. Academy of management journal, March, vol. 24, no. 1, p. 198-205.

Smith, B. 1990. Volkswagen's holistic approach to worker participation. Worker participation: South African options and experiences. (Anstey, M., ed.) Cape Town: Juta & Co, Ltd.

Smith, C.A., Organ, D.W. & Near, J.P. 1983. Organizational citizenship behavior: its nature and antecedents. Journal of applied psychology, vol. 68, p. 653-663.

Smith, P., Kendall, L. & Hulin, C. 1969. Measurement of satisfaction in work and retirement: a strategy for the study of attitudes. Chicago, Ill: Rand McNally.

Sorcher, M. 1967. Motivating the hourly employee. Crotonville, New York: General Electric.

Spector, P.E. 1988. Development of the work locus of control scale. Journal of occupational psychology, vol. 61, p. 335-340.

Staw, B.M., Bell, N.E. & Clausen, J.A. 1986. The dispositional approach to job attitudes: a lifetime longitudinal test. Administrative science quarterly, March.

Staw, B.M. & Oldham, G.R. 1978. Reconsidering our dependent variables: a critique and empirical study. Academy of management journal, vol. 21, No. 4, p. 539-559.

Staw, B.M. & Ross, J. 1985. Stability in the midst of change: a dispositional approach to job attitudes. Journal of applied psychology, vol. 70, p. 469-480.

Stedry, A.C. & Kay, E. 1966. The effects of goal difficulty on performance: a field experiment. Behavioural science, vol. 11, p. 459-470.

Steers, R.M. 1975. Task-goal attributes, achievement, and supervisory performance. Organizational behavior and human performance, vol. 13, p. 392-403.

Steers, R.M. 1976. Factors affecting job attitudes in a goal-setting environment. Academy of management journal, vol. 19, no. 1, March, p. 6-16.

Steers, R.M. 1977. Antecedents and outcomes of organizational commitments. Administrative science quarterly, vol. 22, p. 46-56.

Steers, R.M. & Mowday, R.T. 1981. Employee turnover and post-decision accommodation processes. Research in organizational behaviour, (Cummings, L.L. & Staw, B.M., eds.). Greenwich, Conn.: J.A.I. press.

Steers, R.M. & Porter, L.W. 1991. Motivation and work behaviour. (5th edition). Singapore: McGraw-Hill.

Stevens, J.M., Beyer, J.M. & Trice, H.M. 1978. Assessing personal, role, and organizational predictors of managerial commitment. Academy of management journal, September, vol. 21, no. 3, p. 380-396.

Stewart, M. 1987. Collective bargaining arrangements, closed shop and relative pay. Economic journal, vol. 97, p. 140-156.

Stone, E.F. 1976. The moderating effect of work-related values on the job-scope - job-satisfaction relationship. Organizational behavior and human performance, vol. 15, p. 147-167.

Strauss, G. 1963. Some notes on power equalization. The social science of organization: four perspectives. (Leavitt, H., ed.). Englewood Cliffs: N.J.: Prentice-Hall.

Takeuchi, H. 1981. Productivity: learning from the Japanese. California management review, Summer, vol. 23, p. 5-19.

Tannenbaum, A. & Allport, F.H. 1956. Personality structure and group structure: an interpretive study of their relationship through an event structured hypothesis. Journal of abnormal and social psychology, vol. 53, p. 272-280.

Taylor, E.K. & Griess, T. 1976. The missing middle in validation research. Personnel psychology, vol. 29, p. 5-11.

Taylor, F.W. 1911. The principles of scientific management. New York: Harper and Row.

Taylor, M.S., Fisher, C.D. & Ilgen, D.R. 1984. Individuals' reactions to performance feedback in organizations: a control theory perspective. Research in personnel and human resources management. (Rowland, K.M. & Ferris, G.R., eds.). Greenwich CN: J.A.I. Press.

Thompson, P.H. & Dalton, G.W. 1970. Performance appraisal: managers beware. Harvard business review, vol. 48, p. 149-157.

Thomson, D. 1992. Prepare for the coming revolution in profit sharing. Business day, 30 November.

Thorndike E.L. 1911. Animal intelligence. New York: Macmillan.

Tosi, H. 1970. A re-examination of personality as a determinant of the effects of participation. Personnel psychology, vol. 23, p. 91-99.

Tucker, J., Nock, S.L. & Toscano, D.J. 1989. Employee ownership and perceptions of work. Work and occupations, vol. 16 p. 26-42.

Turnage, J.J. & Muchinsky, P.M. 1976. The effects of reward contingency and participative decision making on intrinsically and extrinsically motivating tasks. Academy of management journal, vol. 19, No. 3, p. 482-489.

Turner, A. & Lawrence, P. 1965. Industrial jobs and the work: an investigation of response to task attributes. Boston: Harvard Business School.

Valenzi, E.R. & Andrews, I.R. 1971. Effect of hourly overpay and underpay inequity when tested with a new induction procedure. Journal of applied psychology, vol. 55, p. 22-27.

Verhonick, P.J. & Seaman, C.C. 1978. Research methods for undergraduate students in nursing. New York: Appleton-Century-Crofts.

Viljoen, J. 1986. Worker participation in a South African context. South African journal of labour relations, vol. 10.

Vroom, V. 1959. Some personality determinants of the effects of participation. Journal of abnormal and social psychology, vol. 59, p. 322-327.

Vroom, V. 1960. Some personality determinants of the effects of participation. Englewood Cliffs, NJ: Prentice-Hall.

Vroom, V. 1964. Work and Motivation. New York: Wiley.

Vroom, V. 1969. Industrial social psychology. Handbook of social psychology.(Lindzey, G. & Anderson, E., eds.). Reading, Mass.: Addison-Wesley.

Vroom, V.H. & Deci, E.L. 1960. Management and motivation. Baltimore: Penguin Books.

Vroom, V. & Yetton, P.W. 1973. Leadership and decision making. Pittsburgh, PA: University of Pittsburgh Press.

Wagner, J. & Gooding, R. 1987. Shared influence and organizational behaviour: a meta-analysis of situational variables expected to moderate participation-outcome relationships. Academy of management journal, vol. 30, no. 3, p. 524-541.

Wagner, I. & Rosen, C. 1985. Employee ownership - its effects on corporate performance. Employment relations today, vol. 12, p. 73-79.

Walker, K.F. 1970. Workers' participation in management: concepts and realities. Paper given at the Industrial relations association second world congress, Geneva.

Wall, T.D. & Lischerson, J.A. 1977. Worker participation: a critique of the literature and some fresh evidence. London: McGraw-Hill.

Wall, T.D., Kemp, N.J., Jackson, P.R. & Clegg, C.W. 1986. Outcomes of autonomous workgroups: a long-term field experiment. Academy of management journal, vol. 29, p. 280-304.

Wallace, R.L. 1971. A comparative study of attitude scores of managers toward employees and toward selected leadership policies in groups of firms which either discontinued or retained cost reduction sharing plans. Unpublished doctoral dissertation. Michigan State University.

Walton, R.E. 1985. From control to commitment in the workplace. Harvard business review, p. 77-84.

Welford, R. 1990. The organisation and behaviour of U.K. worker co-operatives: an empirical investigation. New forms of ownership. (Jenkins, G. & Poole, M., eds.). London: Routledge.

Wells, C. 1982. Quality circles: features of an Australian program. Work and people, vol. 8, p. 12-18.

Werther, W.B. 1983. Quality circles: key executive issues. Journal of contemporary business, vol. 11, no. 2.

White, J.K. 1979a. Generalizability of individual difference moderators of the participation in decision making - employee response relationship. Academy of management journal, vol. 21, p. 36-43.

White, J.K. 1979b. The Scanlon plan: causes and correlates of success. Academy of management journal, vol. 22, p. 292-312.

White, J.K. & Ruh, R.A. 1973. Effects of personal values on the relationship between participation and job attitudes. Administrative science quarterly, vol. 18, p. 506-514.

Wickens, P. 1987. The road to Nissan: flexibility, quality and teamwork. Basingstoke: MacMillan.

Wiener, Y. 1970. The effects of 'task' and 'ego-oriented' performance on two kinds of over-compensation inequity. Organizational behavior and human performance, vol. 5, p. 191-208.

Wilczynski, J. 1983. Comparative industrial relations. London: MacMillan.

Willemsen, E.W. 1973. Understanding statistical reasoning. San Francisco: W.H. Freeman and Company.

Williams, L.J. & Hazer, J.T. 1986. Antecedents and consequences of satisfaction and commitment in turnover models: a reanalysis using latent variable structural equation models. Journal of applied psychology, vol. 71, p. 219-231.

Wilson, F., Haslam, S. & Bowey, A.M. 1982. Bonuses based on company performance. Handbook of salary and wage systems, (Bowey, A.M., ed.). Aldershot: Gower.

Wilson, N. & Peel, M. 1990. The impact of profit-sharing, worker participation, and share ownership on absenteeism & quits: some U.K. evidence. New forms of ownership. (Jenkins, G. & Poole, M., eds.). London: Routledge.

Wright, V. 1986. Does profit sharing improve employee performance? Personnel Management, vol. 11, p. 46-50.

Zander, A., Forward, J. & Albert, R. 1969. Adaptation of board members to repeated failure or success by the organization. Organizational behavior and human performance, vol. 4, p. 56-76.

Zander, A. & Newcomb, T.T. 1967. Group levels of aspiration in united funds campaigns. Journal of personality and social psychology, vol. 6, p. 157-162.

APPENDIX A

PARTICIPATION QUESTIONNAIRE

APPENDIX A-1

PREAMBLE, INSTRUCTIONS AND BIOGRAPHICAL ITEMS

This questionnaire asks you how you feel about your job, your supervisor, the mine and the employee bonus schemes in operation here. Please note that there is no 'right' answer to these questions. Your answers will be kept confidential and used in a research project for academic purposes.

PLEASE NOTE: YOUR ANSWERS WILL BE KEPT CONFIDENTIAL, AND THE COMPLETED FORMS WILL BE REMOVED FROM THE MINE AFTER COMPLETION.

PLEASE ENSURE THAT YOU DO NOT IDENTIFY YOURSELF IN ANY WAY: DO NOT WRITE YOUR NAME OR COMPANY NUMBER ANYWHERE ON THIS FORM !

INSTRUCTIONS

Please indicate your response to each statement by making a cross (X) over that response which most accurately reflects your views. Your response to each statement should be an honest reflection of your personal feelings or opinion.
FOR EXAMPLE:

A. PEOPLE AT THIS MINE ARE FRIENDLY AND HELPFUL

STRONGLY DISAGREE	DISAGREE	NEITHER AGREE NOR DISAGREE	AGREE	STRONGLY AGREE
				X

In this case, the respondent felt inclined to strongly agree with the statement. If he had strongly disagreed, he would have placed the cross in the first box, and so forth.

BIOGRAPHICAL INFORMATION : PLEASE COMPLETE THIS SECTION. WE CANNOT IDENTIFY YOU FROM THIS INFORMATION !

1. Are you married ? : YES / NO
2. Your age last birthday : _____
3. Your home language : _____
4. Your job category & level : _____
5. Your education (Completed): (Standard 1 or lower) ( )
   (Between Standards 2 & 5) ( )
   (Between Standards 6 & 8) ( )
   (Standard 9 or 10) ( )
   (University or Technikon) ( )
6. Do you work underground? : YES / NO
7. Have you attended the "Know Your Company" course?: YES / NO
8. Year started with mine : _____

APPENDIX A-2

QUESTIONNAIRE ITEMS: 'PFNPAR'
('PERCEIVED EXTENT OF FINANCIAL PARTICIPATION')

SECTION: YOUR JOB AND THE COST-CONTAINMENT BONUS SCHEMES AT THE MINE

Please think about your job at the mine. The mine has introduced a bonus scheme for employees. Bonuses are paid to all employees, but the amounts paid depend on the price of gold, and how productive the mine's staff has been in the previous month. The following questions ask about your job and the rewards for working on the mine.

1. THE HARDER I WORK, THE MORE I PRODUCE
2. THE HARDER I WORK, THE MORE I WILL EARN
3. THERE ARE NO REWARDS FOR WORKING HARD IN THIS COMPANY (*)
4. POOR JOB PERFORMANCE MAY GET ME FIRED
5. IMPROVING MY PERFORMANCE WILL LEAD TO MY MAKING MORE MONEY
6. THE BONUS PAID BY THIS MINE IS LARGE ENOUGH TO MAKE ME WORK HARDER

(*) = Reverse-scored item

APPENDIX A-3

QUESTIONNAIRE ITEMS: 'FINSAT'
('SATISFACTION WITH FINANCIAL PARTICIPATION')

1. BECAUSE OF THE BONUS SCHEME, I FEEL LIKE A PARTNER IN THE COMPANY
2. THERE ARE SATISFACTORY REWARDS FOR WORKING HARD ON THIS MINE
3. BECAUSE OF THE BONUS SCHEME, I WANT TO WORK HARDER
4. I FEEL PLEASED WHEN THE MINE MAKES PROFITS, BECAUSE THEN I MAKE MONEY AS WELL
5. THE BONUS PAID BY THE MINE IS WORTH WORKING HARD FOR

APPENDIX A-4

QUESTIONNAIRE ITEMS: 'PPGOAL'
('PERCEIVED EXTENT OF PARTICIPATION IN WORK TARGET SETTING')

SECTION : YOUR JOB AND THE WORK TARGETS THAT ARE SET FOR YOU TO WORK TOWARDS.

Please think about your job at the mine and the targets that you have to work towards.
Work targets mean: how much work that has to be completed each day or week; for example:
how many mining blasts per day; how much ore has to be mined each day; the budget for your work area / department.
The following questions ask about your job and how much say you have in the setting of your work targets.

1. I HAVE A BIG SAY IN THE SETTING OF MY WORK TARGETS
2. MY SUPERVISOR OFTEN ASKS FOR MY THOUGHTS ABOUT MY WORK TARGETS
3. I HAVE HELPED IN PREPARING THE WORK TARGETS FOR MY JOB
4. SUPERVISORS HAVE ASKED ME ABOUT ANY SPECIAL THINGS I WANTED TO HAVE INCLUDED WHEN MY WORK TARGETS WERE BEING DECIDED
5. MY SUPERVISOR HAS LISTENED TO MY PROBLEMS ABOUT WORK TARGETS

6. MY WORK TARGETS HAVE BEEN STATED IN WORDS AND FIGURES WHICH I UNDERSTAND
7. I HAVE BEEN HELPED BY MY SUPERVISOR IN ACHIEVING MY WORK TARGETS
8. MY SUPERVISOR HAS LISTENED TO MY OPINION ABOUT MY WORK TARGETS
9. I HAVE SUGGESTED CHANGES FOR TARGETS IN MY WORK

APPENDIX A-5

QUESTIONNAIRE ITEMS: 'PPSAFE'
('PERCEIVED EXTENT OF PARTICIPATION IN SAFETY-RELATED DECISION-MAKING')

SECTION: YOUR JOB AND THE SAFETY STANDARDS ON THE MINE.
Please think about your job and safety on the mine.
The following questions ask about your job, and the say that you have in the setting of the safety standards relating to your work.

1. I HAVE A BIG SAY IN THE SETTING OF THE SAFETY STANDARDS IN MY JOB
2. MY SUPERVISOR OFTEN ASKS FOR MY THOUGHTS ABOUT SAFETY MATTERS
3. SAFETY PEOPLE HAVE ASKED ME ABOUT ANY SPECIAL THINGS I WANTED TO SAY ABOUT SAFETY
4. MY SUPERIOR HAS LISTENED TO MY PROBLEMS IN SAFETY MATTERS

APPENDIX A-6

QUESTIONNAIRE ITEMS: 'PPAGWD'
('PERCEIVED EXTENT OF PARTICIPATION IN GENERAL WORK-RELATED DECISION-MAKING')

SECTION: "GREEN AREAS; WORKERS FORUMS; ETC.."
Please think about your job and the say that you have about decisions relating to your work - in the green areas, workers' forums etc...
The following questions ask about your work and the say that you have in how you go about performing your job.

1. I HAVE A LOT OF SAY ON HOW I PERFORM MY JOB
2. I AM ABLE TO DECIDE ON HOW TO DO MY JOB
3. I HAVE A LOT OF SAY ABOUT WHAT GOES ON IN MY WORK GROUP
4. I HAVE A LOT OF SAY ABOUT DECISIONS WHICH AFFECT MY JOB

APPENDIX A-7

QUESTIONNAIRE ITEMS: 'GWDSAT'
('SATISFACTION WITH PARTICIPATION IN WORK-RELATED DECISION-MAKING')

1. I AM SATISFIED WITH THE AMOUNT OF SAY THAT I HAVE ON HOW TO DO MY JOB
2. I DO NOT HAVE SUFFICIENT SAY ON WHAT GOES ON IN MY WORK GROUP (*)
3. MY SUPERIORS LISTEN TO MY IDEAS AND SUGGESTIONS

(*) = Reverse-scored item

APPENDIX A-8

QUESTIONNAIRE ITEMS: 'ATTCOM'
('ORGANISATIONAL COMMITMENT')

SECTION: FEELINGS OF COMMITMENT
Please think about your job, and your feelings toward the company.
The following questions ask how you feel about your job and the company that you work for.

1. I DON'T CARE WHAT HAPPENS TO THE COMPANY AS LONG AS I GET PAID (*)
2. THERE IS A FEELING OF "THEM AND US" ON THIS MINE (*)
3. I CAN USUALLY SEE MANAGEMENT'S POINT OF VIEW
4. I FEEL A STRONG SENSE OF COMMITMENT AND LOYALTY TO THE MINE
5. WHAT IS GOOD FOR THE MINE IS GOOD FOR ME
6. MANAGEMENT AND EMPLOYEES ARE BASICALLY ON OPPOSITE SIDES(*)
7. I FEEL I AM AN IMPORTANT MEMBER OF THE COMPANY
8. I AM PROUD TO BE ABLE TO TELL PEOPLE WHO IT IS I WORK FOR

(*) = Reverse-scored items

APPENDIX A-9

QUESTIONNAIRE ITEMS: 'JOBSAT'
('JOB SATISFACTION')

SECTION: FEELINGS ABOUT YOUR JOB
Please think about your job, and your feelings toward it.
The following questions ask how you feel about your job.

1. ON MOST DAYS I FEEL SATISFIED WITH MY JOB
2. I DISLIKE MY JOB (*)
3. I AM ENTHUSIASTIC ABOUT MY JOB
4. I WOULD QUIT THIS JOB AT ONCE IF I COULD (*)
5. I WOULD LIKE TO CHANGE MY JOB FOR ANOTHER ONE (*)

6. I WOULD NOT CHANGE MY JOB FOR ANY OTHER
7. I LIKE MY JOB BETTER THAN MOST PEOPLE LIKE THEIRS
8. BASICALLY, I DON'T LIKE MY JOB (*)
9. ALL IN ALL, I AM SATISFIED WITH MY JOB
10. I FIND REAL ENJOYMENT IN MY JOB
11. I WOULD NOT CONSIDER TAKING ANOTHER JOB

(*) = Reverse-scored items

APPENDIX A-10

QUESTIONNAIRE ITEMS: 'PRSTAY'
('EMPLOYEES' PROPENSITY TO REMAIN')

1. I INTEND TO MAKE A CAREER WITH THIS COMPANY
2. IT WOULD BE VERY DIFFICULT FOR ME TO FIND ANOTHER JOB THAT IS AS GOOD AS THE ONE I HAVE NOW (*)
3. IT WOULD BE VERY HARD FOR ME TO LEAVE THIS EMPLOYER EVEN IF I WANTED TO (*)
4. IF I HAPPENED TO LEARN THAT A GOOD JOB WAS OPEN AT ANOTHER MINE, IT IS LIKELY THAT I WOULD ACTIVELY PURSUE IT (*)
5. IT IS HIGHLY LIKELY THAT I WILL BE WORKING FOR THIS MINE IN 5 YEARS' TIME

(*) = Reverse-scored items

APPENDIX A-11

QUESTIONNAIRE ITEMS: 'LOCCONT'
('WORK LOCUS OF CONTROL')

SECTION: FEELINGS ABOUT YOURSELF AND THE WORLD YOU LIVE IN
The following questions ask how you feel about things in your life and people both in your work and outside the company

1. IF YOU TRIED TO MAKE FRIENDS WITH SOMEONE AT WORK, BUT DIDN'T SUCCEED IT WOULD PROBABLY BE BECAUSE YOU HAD NOT TRIED IN THE RIGHT WAY

2. SOME EMPLOYEES BECOME MANAGERS IN COMPANIES BECAUSE IMPORTANT FRIENDS HAVE HELPED THEM (*)
3. IF YOU TRIED TO GET OTHER EMPLOYEES TO DO SOMETHING, BUT FAILED IT WOULD BE BECAUSE YOU DID IT THE WRONG WAY
4. SOME EMPLOYEES SUCCEED BECAUSE THEY GET HELP FROM OTHERS (*)
5. IF YOU FAILED TO PASS A TRAINING COURSE IT WOULD BE BECAUSE IT IS DIFFICULT TO LEARN SO MANY THINGS AT ONE TIME (*)

(*) = Reverse-scored items

APPENDIX A-12

QUESTIONNAIRE ITEMS: 'NEEDIND'
('NEED FOR INDEPENDENCE')

1. IT IS IMPORTANT THAT I CAN DO MY JOB WITHOUT DEPENDING ON PEOPLE WHO ARE MORE EXPERIENCED THAN ME
2. I OFTEN CARRY OUT OTHER PEOPLE'S SUGGESTIONS WITHOUT CHANGING THEM AT ALL (*)
3. I PREFER MY SUPERVISOR TO TELL ME WHAT TO DO (*)
4. WHEN I HAVE A PROBLEM, I PREFER TO THINK IT THROUGH MYSELF WITHOUT HELP FROM OTHERS
5. I FIND IT HARD TO DISAGREE WITH OTHER PEOPLE'S IDEAS (*)
6. I THINK THAT THE MANAGERS ABOVE ME IN THE MINE HAVE THE RIGHT TO TELL ME WHAT TO DO (*)
7. IF I MAKE A DECISION, IT IS HARD FOR SOMEONE ELSE TO CHANGE MY MIND
8. I FEEL THAT A BOSS SHOULD TELL HIS PEOPLE WHAT TO DO RATHER THAN ASK THEM (*)
9. I DON'T LIKE ONE OF THE SUPERVISORS TELLING ME TO DO SOMETHING THAT I DON'T WANT TO DO

(*) = Reverse-scored items

APPENDIX A-13

QUESTIONNAIRE ITEMS: 'AUTHORM'
('AUTHORITARIANISM')

1. OBEDIENCE AND RESPECT FOR AUTHORITY ARE THE MOST IMPORTANT LESSONS THAT CHILDREN SHOULD LEARN
2. A PERSON WHO HAS BAD MANNERS & HABITS CAN HARDLY EXPECT TO GET ALONG WITH DECENT PEOPLE
3. IF PEOPLE WOULD TALK LESS AND WORK MORE, EVERYBODY WOULD BE BETTER OFF
4. YOUNG PEOPLE SOMETIMES GET REBELLIOUS IDEAS, BUT AS THEY GROW UP, THEY OUGHT TO GET OVER THEM AND SETTLE DOWN (*)
5. WHEN A PERSON HAS A PROBLEM OR WORRY, IT IS BEST FOR HIM NOT TO THINK ABOUT IT, BUT TO KEEP BUSY WITH MORE CHEERFUL THINGS (*)
6. THESE DAYS, MORE AND MORE PEOPLE ARE PRYING INTO MATTERS THAT SHOULD REMAIN PERSONAL AND PRIVATE (*)
7. PEOPLE CAN BE DIVIDED INTO TWO DISTINCT TYPES: THE WEAK AND THE STRONG
8. WHAT THE YOUTH NEEDS MOST IS STRICT DISCIPLINE, AND THE WILL TO WORK

(*) = Reverse-scored items

APPENDIX A-14

QUESTIONNAIRE ITEMS: 'PERCATT'
('PERCEIVED ATTAINABILITY OF WORK TARGETS')

SECTION: FEELINGS ABOUT YOUR WORK TARGETS
Now we return to the work targets in your job.
The following questions ask how you feel about these targets, and whether you feel that they are difficult or easy to achieve

1. I SHOULDN'T HAVE TOO MUCH DIFFICULTY IN REACHING MY WORK TARGETS: THEY ARE FAIRLY EASY

2. MY WORK TARGETS ARE QUITE DIFFICULT TO REACH (*)
3. IF I WORK VERY HARD, I AM SURE THAT I CAN REACH MY WORK TARGETS
4. MY WORK TARGETS ARE TOO DIFFICULT: I WILL NEVER REACH THEM (*)

(*) = Reverse-scored items

APPENDIX A-15

QUESTIONNAIRE ITEMS: 'PERCDIF'
('PERCEIVED DIFFICULTY OF WORK TARGETS')

1. MY WORK TARGETS ARE VERY EASY (*)
2. THE WORK GOALS SET ON THIS MINE ARE VERY DIFFICULT
3. MY WORK TARGETS WILL REQUIRE A GREAT DEAL OF EFFORT FROM ME TO COMPLETE THEM
4. I WILL NEED A LOT OF SKILL AND KNOWLEDGE TO REACH MY WORK TARGETS

(*) = Reverse-scored item

APPENDIX A-16

QUESTIONNAIRE ITEMS: 'PERCEVF'
('PERCEIVED FAIRNESS OF IMMEDIATE SUPERVISOR'S STYLE OF PERFORMANCE EVALUATION')

SECTION: FEELINGS ABOUT YOUR SUPERVISOR
Please think now about your immediate supervisor in your work area.
The following questions ask how you feel about your supervisor.

1. I AM VERY SATISFIED WITH MY SUPERVISOR'S STYLE OF EVALUATION

2. WHEN MY SUPERVISOR CRITICISES MY PERFORMANCE, HIS COMMENTS ARE FAIR
3. WHEN MY SUPERVISOR CRITICISES MY PERFORMANCE, HIS COMMENTS ARE NOT ACCURATE (*)

(*) = Reverse-scored item

APPENDIX A-17

QUESTIONNAIRE ITEMS: 'PERCEVA'
('PERCEIVED AMBIGUITY OF IMMEDIATE SUPERVISOR'S STYLE OF PERFORMANCE EVALUATION')

1. MY SUPERVISOR'S COMMENTS ARE VERY CLEAR (*)
2. I KNOW EXACTLY WHAT MY SUPERVISOR FEELS ABOUT MY WORK (*)
3. I UNDERSTAND CLEARLY WHICH AREAS OF MY WORK PLEASE MY SUPERVISOR (*)
4. I UNDERSTAND MY SUPERVISOR'S FEELINGS ABOUT MY PERFORMANCE (*)

(*) = Reverse-scored items

APPENDIX A-18

QUESTIONNAIRE ITEMS: 'PEROLAP'
('PERCEIVED EXTENT OF OVERLAP OF EMPLOYEE'S ASSIGNED AREAS OF RESPONSIBILITY AND CONTROL')

SECTION: YOUR JOB AND YOUR ABILITY TO GET IT DONE
Please think now about your job again.

1. I AM GIVEN ENOUGH POWER TO ALLOW ME TO DO MY WORK PROPERLY
2. I GET ENOUGH COOPERATION FROM OTHER WORKERS TO ENABLE ME TO GET MY JOB DONE
3. I CONTROL THE RIGHT PEOPLE TO ENABLE ME TO GET MY JOB DONE
4. I HAVE HAD TO EXPLAIN TO MY SUPERVISOR THINGS THAT HAVE GONE WRONG, WHEN I HAVE HAD NO CONTROL OVER THEM (*)

5. I AM SOMETIMES ASKED QUESTIONS ABOUT THINGS THAT ARE NOT MY RESPONSIBILITY (*)

(*) = Reverse-scored items

APPENDIX A-19

QUESTIONNAIRE ITEMS: 'PERFEED'
('PERCEIVED EXTENT OF FEEDBACK RELATING TO EMPLOYEE'S PERFORMANCE')

SECTION: FEEDBACK ON YOUR JOB PERFORMANCE
Please think now about your job, your supervisor, and what information you are given by the company about how well you are doing your job.
The following questions ask about the information (feedback) that is given to you about how well you do your job.

1. I HAVE THE OPPORTUNITY TO FIND OUT HOW WELL I AM DOING MY JOB
2. I HAVE RECEIVED A LOT OF COMMENTS FROM MY SUPERVISOR ABOUT HOW WELL I DO MY JOB
3. I RECEIVE A LOT OF INFORMATION ABOUT THE AMOUNT OF WORK THAT I DO
4. I RECEIVE A LOT OF INFORMATION ABOUT THE QUALITY OF MY WORK
5. MY SUPERVISOR DOES NOT OFTEN LET ME KNOW HOW WELL I AM DOING MY WORK (*)

(*) = Reverse-scored item

APPENDIX A-20

QUESTIONNAIRE ITEMS: 'COMFINP'
('PERCEIVED EXTENT OF MANAGERIAL COMMITMENT TO FINANCIAL PARTICIPATION')

SECTION: FEELINGS ABOUT THE MINE, THE MINE MANAGEMENT, AND THE PARTICIPATION SCHEMES

Please think now about the mine, its management, and your supervisor.
The following questions ask how you feel about the mine and the bonus schemes

1. MY SUPERVISOR ENCOURAGES ME TO WORK HARDER SO THAT I WILL EARN THE PROFIT-SHARING BONUS
2. THE BOSSES AT THIS MINE ARE VERY INTERESTED IN THE MONTHLY RESULTS OF THE PROFIT-SHARING SCHEME
3. THE MINE'S MANAGEMENT ARE PLEASED WHEN THE EMPLOYEES EARN A HIGH BONUS

APPENDIX A-21

QUESTIONNAIRE ITEMS: 'COMGOAL'
('PERCEIVED EXTENT OF MANAGERIAL COMMITMENT TO PARTICIPATION IN WORK TARGET SETTING')

1. MY SUPERVISOR DOES NOT LISTEN TO MY PROBLEMS ABOUT MY WORK TARGETS (*)
2. I HAVE HAD ASSISTANCE FROM MY SUPERVISOR ABOUT PROBLEMS RELATED TO MEETING WORK TARGETS SET FOR ME
3. MY SUPERIORS HAVE USED INFORMATION FROM PRODUCTION REPORTS IN THEIR CONVERSATIONS WITH ME
4. MY SUPERVISOR HAS MENTIONED TARGETS WHEN TALKING TO ME ABOUT HOW WELL I WORK
5. WORK TARGETS IN MY SECTION HAVE BEEN MENTIONED TO ME DURING DISCUSSIONS ABOUT MY PERFORMANCE

6. WORK TARGETS IN MY SECTION HAVE BEEN MENTIONED BY MY SUPERIORS WHEN CONSIDERING ME FOR PAY RISES

(*) = Reverse-scored item

APPENDIX A-22

QUESTIONNAIRE ITEMS: 'COMSAFE'
('PERCEIVED EXTENT OF MANAGERIAL COMMITMENT TO PARTICIPATION IN SAFETY-RELATED DECISION-MAKING')

1. MY SUPERIOR HAS LISTENED TO MY PROBLEMS IN SAFETY MATTERS
2. I HAVE HAD ENOUGH HELP FROM MY SUPERIORS ON PROBLEMS RELATED TO SAFETY
3. THIS COMPANY IS GENUINELY CONCERNED FOR ITS EMPLOYEES' SAFETY
4. THIS COMPANY THINKS THAT PROFITS ARE MORE IMPORTANT THAN DISCUSSING SAFETY MATTERS WITH STAFF (*)

(*) = Reverse-scored item

APPENDIX A-23

QUESTIONNAIRE ITEMS: 'COMGWDP'
('PERCEIVED EXTENT OF MANAGERIAL COMMITMENT TO PARTICIPATION IN GENERAL WORK-RELATED DECISION-MAKING')

1. THIS COMPANY IS GENUINELY CONCERNED WITH ITS EMPLOYEES' OPINIONS ON JOB MATTERS
2. THIS COMPANY IS GENUINELY INTERESTED IN INVOLVING ITS STAFF IN DECISIONS RELATING TO THEIR WORK
3. IF THERE IS A DECISION TO BE MADE, THIS MINE'S MANAGEMENT WILL ASK THE EMPLOYEES WHAT THEY THINK BEFORE THEY ACT
4. MANAGEMENT ON THIS MINE ARE NOT REALLY INTERESTED IN THE OPINIONS OF THEIR EMPLOYEES ABOUT THINGS THAT REALLY MATTER (*)

(*) = Reverse-scored item

APPENDIX A-24

QUESTIONNAIRE ITEMS: 'SELPERF'
('EMPLOYEES' SELF-RATED PERFORMANCE')

SECTION: YOUR ASSESSMENT OF YOUR OWN PERFORMANCE IN YOUR WORK

Please now think about your job, and how well you are currently doing it.
The following questions ask about your own feelings regarding your work performance.

Please rate your own current work performance in each of the following areas:

1. COMMITMENT TO SAFETY
2. CO-OPERATION WITH MY FELLOW WORKERS AND SUPERVISORS
3. TECHNICAL KNOWLEDGE OF MY JOB
4. QUALITY OF MY WORK
5. QUANTITY OF MY WORK
6. INITIATIVE: COMING UP WITH NEW IDEAS OF HOW TO DO MY WORK
7. BEING CAREFUL NOT TO WASTE MONEY
8. BEING RELIABLE IN MY WORK
9. COMMUNICATING WITH MY FELLOW WORKERS AND SUPERVISORS
10. BEING ON TIME (PUNCTUAL) IN MY WORK

APPENDIX A-24

QUESTIONNAIRE ITEMS: 'SELPERF'
('EMPLOYEES' SELF-RATED PERFORMANCE')

SECTION: YOUR ASSESSMENT OF YOUR OWN PERFORMANCE IN YOUR WORK

Please now think about your job, and how well you are currently doing it.
The following questions ask about your own feelings regarding your work performance.

Please rate your own current work performance in each of the following areas:

1. COMMITMENT TO SAFETY
2. CO-OPERATION WITH MY FELLOW WORKERS AND SUPERVISORS
3. TECHNICAL KNOWLEDGE OF MY JOB
4. QUALITY OF MY WORK
5. QUANTITY OF MY WORK
6. INITIATIVE: COMING UP WITH NEW IDEAS OF HOW TO DO MY WORK
7. BEING CAREFUL NOT TO WASTE MONEY
8. BEING RELIABLE IN MY WORK
9. COMMUNICATING WITH MY FELLOW WORKERS AND SUPERVISORS
10. BEING ON TIME (PUNCTUAL) IN MY WORK

APPENDIX A-25

QUESTIONNAIRE ITEMS: OPEN-ENDED
(EMPLOYEES' OPINIONS ABOUT PARTICIPATION SCHEMES)

SECTION: YOUR OPINIONS - OPEN-ENDED QUESTIONS

Thank you for answering our questions. Before we finish, are there any things that you would like to say about the schemes of participation at the mine ?

A. COMMENTS ABOUT THE BONUS SCHEME:

THINGS THAT I THINK ARE GOOD ABOUT THE SCHEME:

1. _____
2. _____
3. _____

THINGS THAT I THINK ARE BAD ABOUT THE SCHEME:

1. _____
2. _____
3. _____

B. COMMENTS ABOUT THE EMPLOYEE PARTICIPATION SCHEMES (GREEN AREAS, WORKERS' FORUMS ETC..)

THINGS THAT I THINK ARE GOOD ABOUT THE SCHEMES:

1. _____
2. _____
3. _____

THINGS THAT I THINK ARE BAD ABOUT THE SCHEMES:

1. _____
2. _____
3. _____

APPENDIX B

DESCRIPTIVE STATISTICS

Key: Variable Codes and Names

Category: Employee Biographical Details	
MARR	Marital Status
AGE	Age in Years
LANG	Home Language
LEVEL	Level in the Organisational Hierarchy
EDUC	Education Level
SITU	Work Site (Above or Below Ground Level)
COURSE	Attendance at Company Orientation Course
YEARS	Tenure in Years
Category: Perceived Extent of Participation	
PFNPAR	Perceived Extent of Financial Participation
PPAGWD	Perceived Extent of Participation in General Work-Related Decision-Making
PPGOAL	Perceived Extent of Participation in Work Target Setting
PPSAFE	Perceived Extent of Participation in Safety-Related Decision-Making
Category: Attitudes Towards Participation and Work	
FINSAT	Satisfaction with Financial Participation
GWDSAT	Satisfaction with Participation in Work-Related Decision-Making
JOBSAT	Job Satisfaction
ATTCOM	Organisational Commitment
PRSTAY	Employees' Propensity to Remain (in current employment)
Category: Personality Constructs	
LOCCONT	Work Locus of Control
NEEDIND	Need for Independence
AUTHORM	Authoritarianism

Key: Variable Codes and Names (Continued)

Category: Perceptions of the Organisation's System of Managerial Communication and Control	
PERCATT	Perceived Attainability of Work Targets
PERCDIF	Perceived Difficulty of Work Targets
PERCEVF	Perceived Fairness of Immediate Supervisor's Style of Performance Evaluation
PERCEVA	Perceived Ambiguity of Immediate Supervisor's Style of Performance Evaluation
PEROLAP	Perceived Extent of Overlap of Employee's Assigned Areas of Responsibility and Control
PERFEED	Perceived Extent of Feedback Relating to Employee's Performance
Category: Perceptions of Management's Commitment to Employee Participation	
COMFINP	Perceived Extent of Managerial Commitment to Financial Participation
COMGWDP	Perceived Extent of Managerial Commitment to Participation in General Work-Related Decision-Making
COMGOAL	Perceived Extent of Managerial Commitment to Participation in Work Target Setting
COMSAFE	Perceived Extent of Managerial Commitment to Participation in Safety-Related Decision-Making
Category: Employee Performance	
SELPERF	Employee Self-Rated Performance
SUPPERF	Employee Supervisor-Rated Performance
Category: Composite Variables	
NPERCATT	Perceived Attainability of Employee Goals
NPERCEVF	Perceived Fairness of Supervisory Evaluation
PERMCOP	Perceived Managerial Commitment to Integrated Employee Participation
GRNPERF	Consolidated Employee Performance

APPENDIX B-1

DESCRIPTIVE STATISTICS: FIRST SURVEY

VARIABLE	NUMBER OF ITEMS	MIDRANGE	CRONBACH ALPHA	HIERARCHY STRATUM	MINIMUM SCORE	MAXIMUM SCORE	MEAN	STD DEV	MEDIAN	SKEWNESS	KURTOSIS
PFNPAR	7	18.00	0.7282	WHOLE SAMPLE	9	30	20.43	4.1816	21.00	0.0383	-0.4570
				MANAGEMENT	9	25	18.35	3.5416	18.50	-0.4074	-0.2599
				CATEGORY A	10	30	19.91	4.6727	20.00	0.0757	-0.5352
				CATEGORY B	11	30	20.73	4.1119	21.00	0.0454	-0.5342
FINSAT	5	15.00	0.7853	WHOLE SAMPLE	5	25	16.50	4.4488	17.00	-0.1125	-0.5687
				MANAGEMENT	8	23	15.43	3.4101	15.00	-0.0775	-0.1624
				CATEGORY A	5	25	16.14	4.8465	16.00	0.1484	-0.7397
				CATEGORY B	5	25	16.67	4.4819	17.00	-0.1859	-0.5594
PPGOAL	9	27.00	0.7593	WHOLE SAMPLE	9	45	32.02	6.8171	33.00	-0.5448	0.1190
				MANAGEMENT	18	43	32.54	5.8830	34.00	-0.7341	0.0307
				CATEGORY A	16	45	32.47	7.0666	34.00	-0.3633	-0.4624
				CATEGORY B	9	45	31.90	6.8865	33.00	-0.5551	0.1924
PPSAFE	4	12.00	0.8019	WHOLE SAMPLE	4	20	15.08	3.3651	16.00	-0.6943	0.1233
				MANAGEMENT	6	20	14.02	3.2006	15.00	-0.7051	-0.3288
				CATEGORY A	8	20	14.77	3.1402	15.00	-0.5107	-0.2639
				CATEGORY B	4	20	15.24	3.3960	16.00	-0.7454	0.2558
PPAGWD	4	12.00	0.8018	WHOLE SAMPLE	4	20	15.57	3.1613	16.00	-1.0065	1.5201
				MANAGEMENT	8	20	15.70	2.6572	16.00	-1.2390	1.8840
				CATEGORY A	4	20	15.97	3.5142	16.00	-0.9676	1.2933
				CATEGORY B	4	20	15.50	3.1635	16.00	-1.0115	1.5487
GWDSAT	3	9.00	0.6929	WHOLE SAMPLE	3	15	9.98	2.1653	10.00	-0.3300	0.2655
				MANAGEMENT	7	12	9.74	1.0206	10.00	-0.6230	0.4620
				CATEGORY A	5	15	9.74	1.7528	10.00	-0.1759	0.8881
				CATEGORY B	3	15	10.04	2.3028	10.00	-0.3733	0.0289
ATTCOM	8	24.00	0.6454	WHOLE SAMPLE	11	40	28.26	4.5956	28.00	-0.2092	0.5448
				MANAGEMENT	20	38	29.26	3.8207	29.00	0.1579	0.1051
				CATEGORY A	15	39	29.95	4.9751	30.00	-0.5764	0.8287
				CATEGORY B	11	40	27.92	4.5612	28.00	-0.1899	0.6026
JOBSAT	11	33.00	0.7450	WHOLE SAMPLE	11	55	38.50	7.8935	39.00	-0.5045	0.5498
				MANAGEMENT	26	53	40.61	6.4065	40.00	0.0593	-0.4618
				CATEGORY A	14	55	41.78	8.6105	43.00	-0.7154	0.9726
				CATEGORY B	11	55	37.82	7.8020	38.00	-0.5462	0.5360
PRSTAY	5	15.00	0.6542	WHOLE SAMPLE	7	25	17.02	2.9541	17.00	-0.1721	0.5301
				MANAGEMENT	13	22	16.63	1.8662	16.00	0.7402	0.8673
				CATEGORY A	9	23	16.84	2.9128	17.00	-0.2644	0.0068
				CATEGORY B	7	25	17.09	3.0557	17.00	-0.2104	0.4879
LOCCONT	5	15.00	0.7114	WHOLE SAMPLE	8	25	17.14	3.1619	17.00	-0.2615	0.0061
				MANAGEMENT	11	22	16.09	2.4388	16.00	0.3174	-0.2342
				CATEGORY A	8	21	15.93	2.7585	16.00	-0.6737	0.5489
				CATEGORY B	8	25	17.42	3.2251	18.00	-0.3466	0.0164

APPENDIX B-1

DESCRIPTIVE STATISTICS: FIRST SURVEY

VARIABLE	NUMBER OF ITEMS	MIDRANGE	CRONBACH ALPHA	HIERARCHY STRATUM	MINIMUM SCORE	MAXIMUM SCORE	MEAN	STD DEV	MEDIAN	SKEWNESS	KURTOSIS
PFNPAR	7	18.00	0.7282	WHOLE SAMPLE	9	30	20.43	4.1816	21.00	0.0383	-0.4570
				MANAGEMENT	9	25	18.35	3.5416	18.50	-0.4074	-0.2599
				CATEGORY A	10	30	19.91	4.6727	20.00	0.0757	-0.5352
				CATEGORY B	11	30	20.73	4.1119	21.00	0.0454	-0.5342
FINSAT	5	15.00	0.7853	WHOLE SAMPLE	5	25	16.50	4.4488	17.00	-0.1125	-0.5687
				MANAGEMENT	8	23	15.43	3.4101	15.00	-0.0775	-0.1624
				CATEGORY A	5	25	16.14	4.8465	16.00	0.1484	-0.7397
				CATEGORY B	5	25	16.67	4.4819	17.00	-0.1859	-0.5594
PPGOAL	9	27.00	0.7593	WHOLE SAMPLE	9	45	32.02	6.8171	33.00	-0.5448	0.1190
				MANAGEMENT	18	43	32.54	5.8830	34.00	-0.7341	0.0307
				CATEGORY A	16	45	32.47	7.0666	34.00	-0.3633	-0.4624
				CATEGORY B	9	45	31.90	6.8865	33.00	-0.5551	0.1924
PPSAFE	4	12.00	0.8019	WHOLE SAMPLE	4	20	15.08	3.3651	16.00	-0.6943	0.1233
				MANAGEMENT	6	20	14.02	3.2006	15.00	-0.7051	-0.3288
				CATEGORY A	8	20	14.77	3.1402	15.00	-0.5107	-0.2639
				CATEGORY B	4	20	15.24	3.3960	16.00	-0.7454	0.2558
PPAGWD	4	12.00	0.8018	WHOLE SAMPLE	4	20	15.57	3.1613	16.00	-1.0065	1.5201
				MANAGEMENT	8	20	15.70	2.6572	16.00	-1.2390	1.8840
				CATEGORY A	4	20	15.97	3.5142	16.00	-0.9676	1.2933
				CATEGORY B	4	20	15.50	3.1635	16.00	-1.0115	1.5487
GWDSAT	3	9.00	0.6929	WHOLE SAMPLE	3	15	9.98	2.1653	10.00	-0.3300	0.2655
				MANAGEMENT	7	12	9.74	1.0206	10.00	-0.6230	0.4620
				CATEGORY A	5	15	9.74	1.7528	10.00	-0.1759	0.8881
				CATEGORY B	3	15	10.04	2.3028	10.00	-0.3733	0.0289
ATTCOM	8	24.00	0.6454	WHOLE SAMPLE	11	40	28.26	4.5956	28.00	-0.2092	0.5448
				MANAGEMENT	20	38	29.26	3.8207	29.00	0.1579	0.1051
				CATEGORY A	15	39	29.95	4.9751	30.00	-0.5764	0.8287
				CATEGORY B	11	40	27.92	4.5612	28.00	-0.1899	0.6026
JOBSAT	11	33.00	0.7450	WHOLE SAMPLE	11	55	38.50	7.8935	39.00	-0.5045	0.5498
				MANAGEMENT	26	53	40.61	6.4065	40.00	0.0593	-0.4618
				CATEGORY A	14	55	41.78	8.6105	43.00	-0.7154	0.9726
				CATEGORY B	11	55	37.82	7.8020	38.00	-0.5462	0.5360
PRSTAY	5	15.00	0.6542	WHOLE SAMPLE	7	25	17.02	2.9541	17.00	-0.1721	0.5301
				MANAGEMENT	13	22	16.63	1.8662	16.00	0.7402	0.8673
				CATEGORY A	9	23	16.84	2.9128	17.00	-0.2644	0.0068
				CATEGORY B	7	25	17.09	3.0557	17.00	-0.2104	0.4879
LOCCONT	5	15.00	0.7114	WHOLE SAMPLE	8	25	17.14	3.1619	17.00	-0.2615	0.0061
				MANAGEMENT	11	22	16.09	2.4388	16.00	0.3174	-0.2342
				CATEGORY A	8	21	15.93	2.7585	16.00	-0.6737	0.5489
				CATEGORY B	8	25	17.42	3.2251	18.00	-0.3466	0.0164

APPENDIX B-1 (Continued)

VARIABLE	NUMBER OF ITEMS	MIDRANGE	CRONBACH ALPHA	HIERARCHY STRATUM	MINIMUM SCORE	MAXIMUM SCORE	MEAN	STD DEV	MEDIAN	SKEWNESS	KURTOSIS
NEEDIND	9	24.00	0.5651	WHOLE SAMPLE	14	40	27.81	3.7675	28.00	-0.1764	0.6398
				MANAGEMENT	20	35	28.61	3.1796	29.00	-0.3275	0.5051
				CATEGORY A	21	40	29.52	3.4400	29.00	0.3113	0.9309
				CATEGORY B	14	40	27.48	3.8001	28.00	-0.1806	0.5772
AUTHORM	8	24.00	0.5820	WHOLE SAMPLE	13	38	26.06	3.2883	26.00	-0.0539	1.1291
				MANAGEMENT	18	33	26.67	3.4193	27.00	-0.6990	0.5422
				CATEGORY A	19	35	27.02	3.1260	26.00	0.4046	0.6138
				CATEGORY B	13	38	25.87	3.2720	26.00	-0.0287	1.3425
PERCATT	4	12.00	0.7365	WHOLE SAMPLE	4	20	13.74	2.8925	14.00	-0.0376	-0.0958
				MANAGEMENT	8	19	13.72	2.3443	14.00	-0.0762	-0.1742
				CATEGORY A	4	20	14.60	2.7334	14.50	-0.5914	2.8555
				CATEGORY B	6	20	13.62	2.9526	14.00	0.0364	-0.3102
PERCDIF	4	12.00	0.6580	WHOLE SAMPLE	4	19	11.64	2.4698	12.00	-0.3082	0.4719
				MANAGEMENT	7	16	12.39	1.7698	12.50	-0.5038	1.1412
				CATEGORY A	4	15	11.86	2.1064	12.00	-0.9900	2.2341
				CATEGORY B	4	19	11.53	2.5676	12.00	-0.1932	0.2878
PERCEVF	3	9.00	0.7580	WHOLE SAMPLE	3	15	10.26	2.3656	10.00	-0.4802	0.3674
				MANAGEMENT	5	13	10.52	1.6963	10.50	-0.8244	0.9133
				CATEGORY A	4	15	10.45	2.7350	11.00	-0.7253	0.0692
				CATEGORY B	3	15	10.20	2.3754	10.00	-0.4077	0.3460
PERCEVA	4	12.00	0.8042	WHOLE SAMPLE	4	20	15.17	3.1077	16.00	-0.7155	0.5884
				MANAGEMENT	10	19	14.72	2.3253	15.00	-0.4613	-0.2789
				CATEGORY A	6	20	15.05	3.4763	16.00	-0.6055	-0.0245
				CATEGORY B	4	20	15.23	3.1307	16.00	-0.7634	0.7068
PEROLAP	5	15.00	0.6972	WHOLE SAMPLE	7	25	17.10	2.9787	17.00	-0.2816	0.9178
				MANAGEMENT	10	23	16.26	2.6536	16.00	-0.1378	0.5779
				CATEGORY A	7	22	15.79	3.0537	16.00	-0.7310	0.3058
				CATEGORY B	7	25	17.38	2.9427	17.00	-0.2406	1.0158
PERFEED	5	15.00	0.7533	WHOLE SAMPLE	5	25	17.09	3.6840	18.00	-0.5494	0.1648
				MANAGEMENT	8	25	15.43	3.4811	15.00	0.2979	0.0763
				CATEGORY A	7	24	16.00	4.2385	16.00	-0.0387	-0.8553
				CATEGORY B	5	25	17.42	3.5531	18.00	-0.7286	0.7248
COMFINP	3	9.00	0.8012	WHOLE SAMPLE	3	15	10.29	2.7388	10.00	-0.2637	-0.3481
				MANAGEMENT	5	14	10.83	1.8050	11.00	-0.7003	1.1194
				CATEGORY A	5	15	10.41	2.7723	10.50	-0.0119	-0.5723
				CATEGORY B	3	15	10.22	2.8155	10.00	-0.2453	-0.4303
COMGOAL	6	18.00	0.7562	WHOLE SAMPLE	6	30	20.06	4.5131	20.00	-0.4570	0.3132
				MANAGEMENT	14	26	20.07	3.1298	20.00	-0.0358	-0.6613
				CATEGORY A	10	30	19.71	4.9418	21.00	-0.1839	-0.7706
				CATEGORY B	6	30	20.11	4.5856	20.00	-0.5078	0.4411

APPENDIX B-1 (Continued)

VARIABLE	NUMBER OF ITEMS	MIDRANGE	CRONBACH ALPHA	HIERARCHY STRATUM	MINIMUM SCORE	MAXIMUM SCORE	MEAN	STD DEV	MEDIAN	SKEWNESS	KURTOSIS
COMSAFE	4	12.00	0.7663	WHOLE SAMPLE	4	20	14.74	3.1183	15.00	-0.5991	0.4903
				MANAGEMENT	10	20	15.24	2.1518	16.00	-0.5062	0.2842
				CATEGORY A	9	20	15.69	2.6305	16.00	-0.7637	0.1043
				CATEGORY B	4	20	14.55	3.2419	15.00	-0.5289	0.3713
COMGWDP	4	12.00	0.7690	WHOLE SAMPLE	4	20	12.79	3.3539	13.00	-0.1625	-0.3396
				MANAGEMENT	6	20	13.22	2.8356	13.00	0.0138	0.5258
				CATEGORY A	5	20	12.71	3.6226	12.50	0.0368	-0.6343
				CATEGORY B	4	20	12.76	3.3719	13.00	-0.1296	-0.3541
SELPERF	10	30.00	0.7713	WHOLE SAMPLE	14	50	32.17	5.6880	32.00	-0.2837	0.0356
				MANAGEMENT	22	40	31.48	3.3714	31.50	-0.2709	1.1175
				CATEGORY A	20	40	31.95	4.0671	31.50	0.0257	0.4951
				CATEGORY B	14	50	32.27	6.0690	32.00	-0.3222	-0.1894
SUPPERF	N/A	2.50	N/A	WHOLE SAMPLE	1	4	2.73	0.8551	3.00	-0.2639	-0.5333
				MANAGEMENT	1	4	2.35	0.8748	2.00	-0.1342	-0.7949
				CATEGORY A	1	4	2.47	0.9025	3.00	-0.1902	-0.7490
				CATEGORY B	1	4	2.81	0.8292	3.00	-0.2621	-0.5012
COMPOSITE VARIABLES:											
NPERCATT	8	24.00	0.5326	WHOLE SAMPLE	15	36	25.38	3.1300	26.00	0.0080	0.6851
				MANAGEMENT	18	32	26.11	2.7099	26.00	-0.4353	0.7680
				CATEGORY A	19	33	26.47	2.5355	27.00	-0.5202	1.4654
				CATEGORY B	15	36	25.15	3.2077	25.00	0.1404	0.7561
NPERCEVF	7	21.00	0.7548	WHOLE SAMPLE	10	35	25.42	4.7787	26.00	-0.6062	0.6339
				MANAGEMENT	18	32	25.24	3.2808	26.00	-0.2099	-0.5199
				CATEGORY A	10	35	25.50	5.8767	26.50	-0.6701	0.2661
				CATEGORY B	11	35	25.43	4.7588	26.00	-0.6035	0.5910
PERMCOP	17	51.00	0.7363	WHOLE SAMPLE	21	85	57.89	10.5135	58.00	-0.1238	-0.1104
				MANAGEMENT	46	77	59.35	6.9289	59.00	0.3535	0.0278
				CATEGORY A	35	81	58.52	11.7900	59.50	0.0046	-0.8303
				CATEGORY B	21	85	57.64	10.6553	58.00	-0.1383	-0.0942
GRNPERF	N/A	47.50	N/A	WHOLE SAMPLE	28	73	51.92	7.1743	52.00	-0.2797	-0.0384
				MANAGEMENT	41	58	50.46	4.0809	50.00	0.0138	-0.4093
				CATEGORY A	38	65	51.26	5.7018	52.00	-0.1296	-0.4401
				CATEGORY B	28	73	52.17	7.5935	52.00	-0.3484	-0.1546

APPENDIX B-2

DESCRIPTIVE STATISTICS: SECOND SURVEY

VARIABLE	NUMBER OF ITEMS	MIDRANGE	CRONBACH ALPHA	HIERARCHY STRATUM	MINIMUM SCORE	MAXIMUM SCORE	MEAN	STD DEV	MEDIAN	SKEWNESS	KURTOSIS
PFNPAR	7	18.00	0.7260	WHOLE SAMPLE	10	30	20.22	4.0946	20.00	-0.0306	-0.3279
				MANAGEMENT	10	30	19.55	4.7125	19.50	0.1514	-0.0980
				CATEGORY A	12	29	19.65	3.9063	19.00	0.3915	0.3991
				CATEGORY B	11	29	20.57	3.9329	21.00	-0.1624	-0.5106
FINSAT	5	15.00	0.8011	WHOLE SAMPLE	5	25	16.76	4.7633	17.00	-0.1906	-0.3701
				MANAGEMENT	5	25	16.16	4.5235	17.00	-0.1498	0.1097
				CATEGORY A	7	24	15.85	4.0163	17.00	-0.2245	-0.2792
				CATEGORY B	5	25	17.18	4.9846	17.00	-0.2731	-0.4576
PPGOAL	9	27.00	0.7656	WHOLE SAMPLE	12	45	31.79	7.0816	33.00	-0.3852	-0.0395
				MANAGEMENT	22	45	34.09	4.6796	35.00	-0.3269	1.0982
				CATEGORY A	14	44	30.65	6.8334	32.00	-0.5681	-0.2712
				CATEGORY B	12	45	31.42	7.6045	32.00	-0.2268	-0.2900
PPSAFE	4	12.00	0.7913	WHOLE SAMPLE	4	20	15.04	3.2032	16.00	-0.7630	0.9642
				MANAGEMENT	6	20	15.09	2.8596	15.50	-0.4458	1.6003
				CATEGORY A	8	20	15.53	2.4494	16.00	-0.4616	1.2907
				CATEGORY B	4	20	14.89	3.4683	16.00	-0.7719	0.5818
PPAGWD	4	12.00	0.8029	WHOLE SAMPLE	4	20	15.97	2.9523	16.00	-0.7952	1.2630
				MANAGEMENT	8	20	15.55	2.8648	16.00	-0.0960	0.1064
				CATEGORY A	10	20	16.43	2.4588	16.00	-0.6513	0.8757
				CATEGORY B	4	20	15.97	3.0935	16.00	-0.9563	1.5671
GWDSAT	3	9.00	0.7176	WHOLE SAMPLE	3	15	10.13	2.2218	10.00	-0.2837	1.4122
				MANAGEMENT	8	15	10.27	1.3531	10.00	1.2460	3.3233
				CATEGORY A	6	13	10.00	1.3205	10.00	-0.4220	1.2014
				CATEGORY B	3	15	10.12	2.5930	10.00	-0.3094	0.5277
ATTCOM	8	24.00	0.7218	WHOLE SAMPLE	11	40	27.85	4.9831	28.00	-0.3902	0.8313
				MANAGEMENT	20	40	30.39	4.8090	30.50	-0.0785	-0.4954
				CATEGORY A	20	37	28.78	4.3056	28.50	0.0749	-0.6953
				CATEGORY B	11	38	26.86	4.9182	27.00	-0.5994	1.1674
JOBSAT	11	33.00	0.7370	WHOLE SAMPLE	11	55	38.73	7.2835	39.00	-0.4362	1.0037
				MANAGEMENT	32	55	41.98	6.6664	42.00	0.3402	-0.6676
				CATEGORY A	29	55	41.23	5.7132	40.00	0.5482	0.2672
				CATEGORY B	11	55	37.11	7.3586	38.00	-0.6373	0.8296
PRSTAY	5	15.00	0.6188	WHOLE SAMPLE	8	25	16.72	2.6327	17.00	-0.0167	1.2942
				MANAGEMENT	13	24	17.11	2.2435	17.00	0.4728	0.7861
				CATEGORY A	8	21	15.90	2.6292	16.00	-0.7857	2.1510
				CATEGORY B	9	25	16.83	2.7090	17.00	0.1120	0.9924
LOCCONT	5	15.00	0.7398	WHOLE SAMPLE	5	25	16.87	3.4659	17.00	-0.1633	0.4327
				MANAGEMENT	11	22	15.91	2.4572	16.00	-0.0085	-0.2249
				CATEGORY A	9	24	15.58	2.7258	15.00	0.3779	1.5045
				CATEGORY B	5	25	17.49	3.7394	18.00	-0.4945	0.6001

APPENDIX B-2 (Continued)

VARIABLE	NUMBER OF ITEMS	MIDRANGE	CRONBACH ALPHA	HIERARCHY STRATUM	MINIMUM SCORE	MAXIMUM SCORE	MEAN	STD DEV	MEDIAN	SKEWNESS	KURTOSIS
NEEDIND	9	24.00	0.4784	WHOLE SAMPLE	19	37	28.14	3.1448	28.00	-0.2247	-0.0321
				MANAGEMENT	24	34	29.48	2.3673	29.00	-0.3504	0.2182
				CATEGORY A	23	35	28.50	2.9000	28.00	0.3951	-0.4726
				CATEGORY B	19	37	27.65	3.2932	28.00	-0.1571	-0.1034
AUTHORM	8	24.00	0.5039	WHOLE SAMPLE	17	34	26.13	2.6715	26.00	-0.1173	0.7377
				MANAGEMENT	18	32	25.91	2.6398	25.00	-0.1354	1.1182
				CATEGORY A	22	33	27.10	2.6583	27.00	0.2059	-0.2855
				CATEGORY B	17	34	25.94	2.6451	26.00	-0.2166	0.9148
PERCATT	4	12.00	0.7206	WHOLE SAMPLE	6	20	13.68	2.7228	14.00	-0.3601	0.2091
				MANAGEMENT	10	20	14.70	2.2265	15.00	0.0598	-0.2125
				CATEGORY A	9	18	14.60	2.0854	15.00	-0.7200	0.2989
				CATEGORY B	6	20	13.13	2.8598	13.00	-0.1868	0.1127
PERCDIF	4	12.00	0.5776	WHOLE SAMPLE	5	20	12.00	2.0933	12.00	-0.1643	1.2642
				MANAGEMENT	6	15	12.41	1.5895	12.50	-1.4460	5.0724
				CATEGORY A	8	14	11.53	1.3395	12.00	-0.3931	-0.0147
				CATEGORY B	5	20	12.01	2.3545	12.00	-0.0662	0.7021
PERCEVF	3	9.00	0.7761	WHOLE SAMPLE	3	15	10.05	2.4447	10.00	-0.3963	-0.0125
				MANAGEMENT	3	15	10.16	2.6054	9.50	-0.4305	0.0748
				CATEGORY A	6	15	10.68	2.0803	11.00	-0.3330	-0.4200
				CATEGORY B	3	15	9.85	2.4706	10.00	-0.3573	-0.0167
PERCEVA	4	12.00	0.8181	WHOLE SAMPLE	4	20	14.84	3.0990	16.00	-0.6051	0.5044
				MANAGEMENT	8	20	14.23	2.8924	14.50	-0.0260	-0.0034
				CATEGORY A	10	20	15.50	2.1243	16.00	-0.0422	1.1743
				CATEGORY B	4	20	14.84	3.3460	16.00	-0.6945	0.3682
PEROLAP	5	15.00	0.6569	WHOLE SAMPLE	9	25	16.70	2.4973	16.00	0.0412	0.7717
				MANAGEMENT	11	22	16.82	2.3255	17.00	-0.3737	0.9036
				CATEGORY A	9	23	16.50	2.8011	17.00	-0.4348	0.5433
				CATEGORY B	10	25	16.72	2.4744	16.00	0.3348	0.8526
PERFEED	5	15.00	0.7567	WHOLE SAMPLE	5	25	17.01	3.6540	18.00	-0.6503	0.5308
				MANAGEMENT	8	24	16.00	3.6216	15.50	0.0339	-0.2593
				CATEGORY A	7	24	16.30	3.4803	16.50	-0.4611	0.6230
				CATEGORY B	5	25	17.50	3.6394	18.00	-0.9584	1.3253
COMFINP	3	9.00	0.7985	WHOLE SAMPLE	3	15	10.49	2.5207	11.00	-0.4543	0.2650
				MANAGEMENT	6	15	10.59	2.1708	11.00	-0.1293	-0.2297
				CATEGORY A	8	14	10.65	1.7766	10.50	0.1009	-1.1011
				CATEGORY B	3	15	10.41	2.7810	11.00	-0.4793	0.0438
COMGOAL	6	18.00	0.7558	WHOLE SAMPLE	7	30	20.26	4.3671	20.50	-0.2243	0.0437
				MANAGEMENT	15	30	21.32	3.6330	21.00	0.5603	0.3483
				CATEGORY A	12	29	19.13	3.7906	19.00	0.1094	0.0648
				CATEGORY B	7	29	20.26	4.6450	20.50	-0.3705	-0.1124

APPENDIX B-2 (Continued)

VARIABLE	NUMBER OF ITEMS	MIDRANGE	CRONBACH ALPHA	HIERARCHY STRATUM	MINIMUM SCORE	MAXIMUM SCORE	MEAN	STD DEV	MEDIAN	SKEWNESS	KURTOSIS
COMSAFE	4	12.00	0.7641	WHOLE SAMPLE	6	20	14.48	2.9881	15.00	-0.4317	0.0812
				MANAGEMENT	11	20	15.68	2.0205	15.00	0.1388	0.0722
				CATEGORY A	8	19	15.20	2.6718	15.00	-0.6416	0.2268
				CATEGORY B	6	20	13.93	3.1701	14.00	-0.2367	-0.1555
COMGWDP	4	12.00	0.7832	WHOLE SAMPLE	4	20	12.48	3.4232	13.00	-0.2610	-0.2097
				MANAGEMENT	7	19	13.36	3.1922	13.00	-0.0645	-0.6645
				CATEGORY A	6	20	11.83	3.5438	12.00	0.2719	-0.7545
				CATEGORY B	4	20	12.39	3.4269	13.00	-0.4318	0.0971
SELPERF	10	30.00	0.7600	WHOLE SAMPLE	17	40	30.61	5.3230	30.00	-0.2191	-0.1894
				MANAGEMENT	20	40	32.86	3.7824	33.00	-0.4485	2.0923
				CATEGORY A	26	40	31.90	3.8816	31.00	0.5614	-0.3416
				CATEGORY B	17	40	29.60	5.7673	30.00	0.0083	-0.5088
SUPPERF	N/A	N/A	N/A	WHOLE SAMPLE	N/A	N/A	N/A	N/A	N/A	N/A	N/A
				MANAGEMENT	N/A	N/A	N/A	N/A	N/A	N/A	N/A
				CATEGORY A	N/A	N/A	N/A	N/A	N/A	N/A	N/A
				CATEGORY B	N/A	N/A	N/A	N/A	N/A	N/A	N/A
COMPOSITE VARIABLES:											
NPERCATT	8	24.00	0.4785	WHOLE SAMPLE	16	32	25.68	2.8017	26.00	-0.3568	0.8518
				MANAGEMENT	22	32	27.11	2.5263	27.00	0.0112	-0.6305
				CATEGORY A	21	29	26.13	1.9636	26.00	-0.6113	0.7753
				CATEGORY B	16	32	25.14	2.9104	25.00	-0.3028	0.8751
NPERCEVF	7	21.00	0.7662	WHOLE SAMPLE	10	35	24.88	4.9129	25.50	-0.5134	0.2387
				MANAGEMENT	13	35	24.39	4.9800	24.00	0.1034	-0.2470
				CATEGORY A	19	34	26.18	3.8888	27.00	-0.0784	-0.2727
				CATEGORY B	10	35	24.69	5.1058	25.00	-0.6582	0.2872
PERMCOP	17	51.00	0.7448	WHOLE SAMPLE	26	84	57.71	10.9565	58.00	-0.1542	0.1169
				MANAGEMENT	45	84	60.96	9.4843	60.00	0.5405	-0.0408
				CATEGORY A	41	72	56.80	9.0560	55.50	0.0221	-0.9343
				CATEGORY B	26	83	57.00	11.6815	58.00	-0.2282	-0.0132
GRNPERF	N/A	47.50	N/A	WHOLE SAMPLE	30	64	47.33	6.1949	47.00	-0.0355	-0.1409
				MANAGEMENT	35	64	49.98	5.1285	50.00	0.0495	1.3231
				CATEGORY A	39	60	47.80	5.4594	48.00	0.3782	-0.1156
				CATEGORY B	30	61	46.43	6.4552	47.00	0.0245	-0.3522

APPENDIX C
INTERCORRELATION MATRICES

CONTENTS:

Appendix C-A Key to Intercorrelation Matrices

Appendix C-B Explanatory Key: Intercorrelations

Appendix C-1 Intercorrelation Matrix: First Survey
($p < 0.05$)
Sample Sizes:
- Whole Sample..... n = 525
- Management..... n = 46
- Supervisors and Artisans ('Category A')..... n = 58
- Unskilled and Semi-skilled ('Category B').. n = 421

Appendix C-2 Intercorrelation Matrix: Second Survey
($p < 0.05$)
Sample Sizes:
- Whole Sample..... n = 234
- Management..... n = 44
- Supervisors and Artisans ('Category A')..... n = 40
- Unskilled and Semi-skilled ('Category B').. n = 150

Appendix C-3 Intercorrelation Matrices: Questionnaire Items

Appendix C3-1: 'Participation' Items
Appendix C3-2: 'Personality' Items
Appendix C3-3: 'Managerial Control' Items
Appendix C3-4: 'Managerial Commitment' Items
Appendix C3-5: 'Satisfaction' Items
Appendix C3-6: 'Performance' Items

Appendix C-A Key to Intercorrelations Matrices

	MARR	AGE	LANG	LEVEL	EDUC	SITU	COURSE	YEARS	PFNPAR	FINSAT	PPGOAL	PPSAFE	PPAGWD	GWDSAT	ATTCOM	JOBSAT	PRSTAY	LOCCONT	NEEDIND	AUTHORM	PERCATT	PERCDIF	PERCEVF	PERCEVA	PEROLAP	PERFEED	COMFINP	COMGOAL	COMSAFE	COMGWDP	SELPERF	SUPPERF	NPERCATT	NPERCEVF	PERMCOP	GRNPERF
MARR										1st survey: C1-1 2nd survey: C2-1																											
AGE																																				
LANG																																				
LEVEL																																				
EDUC																																				
SITU																																				
COURSE																																				
YEARS																																				
PFNPAR																																				
FINSAT										1st survey: C1-2 2nd survey: C2-2									1st survey: C1-5 2nd survey: C2-5																			
PPGOAL																																				
PPSAFE																																				
PPAGWD																																				
GWDSAT																																				
ATTCOM																																				
JOBSAT																																				
PRSTAY																																				
LOCCONT																																				
NEEDIND										1st survey: C1-3 2nd survey: C2-3									1st survey: C1-6 2nd survey: C2-6									1st survey: C1-8 2nd survey: C2-8								
AUTHORM																																				
PERCATT																																				
PERCDIF																																				
PERCEVF																																				
PERCEVA																																				
PEROLAP																																				
PERFEED																																				
COMFINP																																				
COMGOAL										1st survey: C1-4 2nd survey: C2-4									1st survey: C1-7 2nd survey: C2-7									1st survey: C1-9 2nd survey: C2-9								1st survey: C1-10 2nd survey: C2-10
COMSAFE																																				
COMGWDP																																				
SELPERF																																				
SUPPERF																																				
NPERCATT																																				
NPERCEVF																																				
PERMCOP																																				
GRNPERF																																				

Appendix C-B Explanatory Key: Intercorrelations

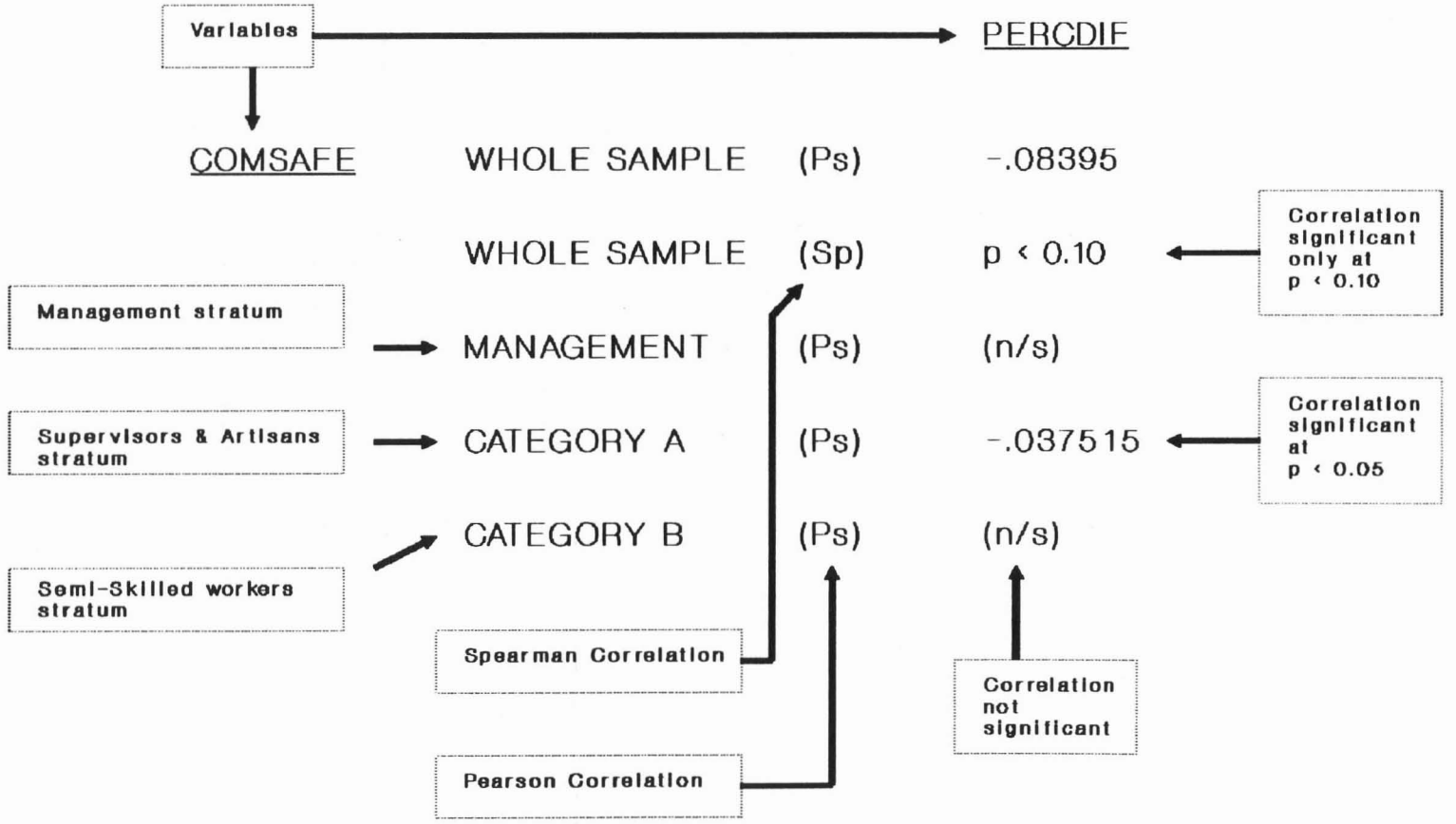

APPENDIX C1-1

		MARR	AGE	LANG	LEVEL	EDUC	SITU	COURSE	YEARS	PFNPAR	FINSAT
MARR	WHOLE SAMPLE (Ps)	1.00000									
	WHOLE SAMPLE (Sp)	1.00000									
	MANAGEMENT (Ps)	1.00000									
	CATEGORY A (Ps)	1.00000									
	CATEGORY B (Ps)	1.00000									
AGE	WHOLE SAMPLE (Ps)	0.21635	1.00000								
	WHOLE SAMPLE (Sp)	0.22334	1.00000								
	MANAGEMENT (Ps)	(n/s)	1.00000								
	CATEGORY A (Ps)	(n/s)	1.00000								
	CATEGORY B (Ps)	0.21777	1.00000								
LANG	WHOLE SAMPLE (Ps)	(n/s)	p < 0.10	1.00000							
	WHOLE SAMPLE (Sp)	(n/s)	0.11819	1.00000							
	MANAGEMENT (Ps)	-0.29063	(n/s)	1.00000							
	CATEGORY A (Ps)	(n/s)	(n/s)	1.00000							
	CATEGORY B (Ps)	(n/s)	0.23915	1.00000							
LEVEL	WHOLE SAMPLE (Ps)	(n/s)	0.14369	-0.57764	1.00000						
	WHOLE SAMPLE (Sp)	(n/s)	p < 0.10	-0.59590	1.00000						
	MANAGEMENT (Ps)	.....	.....	.....	1.00000						
	CATEGORY A (Ps)	.....	.....	.....	1.00000						
	CATEGORY B (Ps)	.....	.....	.....	1.00000						
EDUC	WHOLE SAMPLE (Ps)	(n/s)	-0.15320	-0.43769	0.56055	1.00000					
	WHOLE SAMPLE (Sp)	(n/s)	-0.17157	-0.42775	0.53532	1.00000					
	MANAGEMENT (Ps)	(n/s)	-0.33145	-0.34434	.....	1.00000					
	CATEGORY A (Ps)	(n/s)	-0.35592	-0.51878	.....	1.00000					
	CATEGORY B (Ps)	-0.09796	-0.27193	(n/s)	.....	1.00000					
SITU	WHOLE SAMPLE (Ps)	0.10785	(n/s)	0.24214	-0.24735	-0.37496	1.00000				
	WHOLE SAMPLE (Sp)	0.10772	(n/s)	0.24776	-0.24723	-0.37545	1.00000				
	MANAGEMENT (Ps)	-0.33968	(n/s)	(n/s)	.....	(n/s)	1.00000				
	CATEGORY A (Ps)	(n/s)	(n/s)	(n/s)	.....	(n/s)	1.00000				
	CATEGORY B (Ps)	0.15504	(n/s)	0.11172	.....	-0.31893	1.00000				
COURSE	WHOLE SAMPLE (Ps)	0.10037	0.10372	0.15478	-0.09802	-0.08655	(n/s)	1.00000			
	WHOLE SAMPLE (Sp)	0.10037	0.09935	0.15299	-0.08801	p < 0.10	(n/s)	1.00000			
	MANAGEMENT (Ps)	(n/s)	(n/s)	(n/s)	.....	-0.29154	(n/s)	1.00000			
	CATEGORY A (Ps)	(n/s)	0.32775	(n/s)	.....	-0.26326	(n/s)	1.00000			
	CATEGORY B (Ps)	0.13519	(n/s)	0.12699	.....	(n/s)	(n/s)	1.00000			
YEARS	WHOLE SAMPLE (Ps)	0.13771	0.47586	(n/s)	(n/s)	-0.12934	(n/s)	0.13270	1.00000		
	WHOLE SAMPLE (Sp)	0.14609	0.43093	0.09741	(n/s)	-0.16054	(n/s)	0.14393	1.00000		
	MANAGEMENT (Ps)	(n/s)	0.52011	(n/s)	.....	(n/s)	0.33270	0.48686	1.00000		
	CATEGORY A (Ps)	(n/s)	0.55453	(n/s)	.....	-0.47277	(n/s)	0.28424	1.00000		
	CATEGORY B (Ps)	0.16770	0.45125	(n/s)	.....	-0.13382	(n/s)	(n/s)	1.00000		
PFNPAR	WHOLE SAMPLE (Ps)	(n/s)	(n/s)	0.14579	-0.17523	-0.13055	(n/s)	(n/s)	p < 0.10	1.00000	
	WHOLE SAMPLE (Sp)	(n/s)	(n/s)	0.14324	-0.16080	-0.10117	(n/s)	(n/s)	0.09204	1.00000	
	MANAGEMENT (Ps)	0.29506	(n/s)	(n/s)	.....	(n/s)	(n/s)	(n/s)	(n/s)	1.00000	
	CATEGORY A (Ps)	(n/s)	0.26639	(n/s)	.....	-0.39009	(n/s)	(n/s)	0.40620	1.00000	
	CATEGORY B (Ps)	(n/s)	0.09639	(n/s)	.....	(n/s)	(n/s)	(n/s)	(n/s)	1.00000	

			MARR	AGE	LANG	LEVEL	EDUC	SITU	COURSE	YEARS	PFNPAR	FINSAT
FINSAT	WHOLE SAMPLE	(Ps)	(n/s)	0.12368	0.09522	(n/s)	(n/s)	(n/s)	(n/s)	0.14827	0.62133	1.00000
	WHOLE SAMPLE	(Sp)	(n/s)	0.12026	0.09510	(n/s)	(n/s)	(n/s)	(n/s)	0.13526	0.60835	1.00000
	MANAGEMENT	(Ps)	(n/s)	(n/s)	(n/s)	.....	(n/s)	(n/s)	(n/s)	(n/s)	0.61096	1.00000
	CATEGORY A	(Ps)	(n/s)	0.25878	(n/s)	.....	(n/s)	(n/s)	0.26456	0.30018	0.70084	1.00000
	CATEGORY B	(Ps)	(n/s)	0.10933	(n/s)	.....	(n/s)	(n/s)	(n/s)	0.14260	0.60536	1.00000
PPGOAL	WHOLE SAMPLE	(Ps)	(n/s)	0.11617	(n/s)	(n/s)	(n/s)	(n/s)	(n/s)	0.12251	0.37119	0.45997
	WHOLE SAMPLE	(Sp)	(n/s)	0.09309	(n/s)	(n/s)	(n/s)	(n/s)	(n/s)	0.11375	0.36703	0.45772
	MANAGEMENT	(Ps)	(n/s)	(n/s)	-0.40273	.....	(n/s)	(n/s)	(n/s)	(n/s)	(n/s)	0.29701
	CATEGORY A	(Ps)	(n/s)	(n/s)	(n/s)	.....	(n/s)	(n/s)	0.26571	(n/s)	0.30727	0.48933
	CATEGORY B	(Ps)	(n/s)	0.11699	0.12244	.....	-0.14279	(n/s)	(n/s)	0.11862	0.40803	0.47290
PPSAFE	WHOLE SAMPLE	(Ps)	(n/s)	(n/s)	(n/s)	-0.14710	-0.20697	0.16425	0.10937	(n/s)	0.36758	0.33784
	WHOLE SAMPLE	(Sp)	(n/s)	(n/s)	(n/s)	-0.16139	-0.18919	0.16930	0.13039	0.08780	0.37198	0.33357
	MANAGEMENT	(Ps)	(n/s)	(n/s)	(n/s)	.....	(n/s)	(n/s)	(n/s)	(n/s)	(n/s)	0.30452
	CATEGORY A	(Ps)	(n/s)	(n/s)	(n/s)	.....	(n/s)	(n/s)	0.27686	(n/s)	0.37289	0.30754
	CATEGORY B	(Ps)	(n/s)	(n/s)	(n/s)	.....	-0.18585	0.14092	(n/s)	(n/s)	0.37423	0.33859
PPAGWD	WHOLE SAMPLE	(Ps)	(n/s)	(n/s)	(n/s)	(n/s)	(n/s)	(n/s)	(n/s)	(n/s)	0.27996	0.29121
	WHOLE SAMPLE	(Sp)	(n/s)	(n/s)	(n/s)	(n/s)	(n/s)	(n/s)	(n/s)	(n/s)	0.28061	0.30835
	MANAGEMENT	(Ps)	(n/s)	(n/s)	(n/s)	.....	(n/s)	(n/s)	(n/s)	(n/s)	(n/s)	(n/s)
	CATEGORY A	(Ps)	(n/s)	(n/s)	(n/s)	.....	-0.30761	(n/s)	(n/s)	0.29089	0.44106	0.37419
	CATEGORY B	(Ps)	(n/s)	(n/s)	(n/s)	.....	(n/s)	(n/s)	(n/s)	(n/s)	0.28447	0.28819
GWDSAT	WHOLE SAMPLE	(Ps)	(n/s)	(n/s)	(n/s)	(n/s)	-0.12049	(n/s)	(n/s)	(n/s)	0.22929	0.31272
	WHOLE SAMPLE	(Sp)	(n/s)	(n/s)	(n/s)	-0.09488	-0.13273	(n/s)	(n/s)	(n/s)	0.23457	0.32830
	MANAGEMENT	(Ps)	(n/s)	(n/s)	(n/s)	.....	(n/s)	(n/s)	(n/s)	(n/s)	(n/s)	(n/s)
	CATEGORY A	(Ps)	(n/s)	(n/s)	(n/s)	.....	(n/s)	(n/s)	(n/s)	(n/s)	(n/s)	0.29753
	CATEGORY B	(Ps)	(n/s)	(n/s)	-0.12004	.....	-0.12774	(n/s)	(n/s)	(n/s)	0.23834	0.31948
ATTCOM	WHOLE SAMPLE	(Ps)	(n/s)	(n/s)	-0.15580	0.11478	0.10625	(n/s)	(n/s)	(n/s)	0.38416	0.39533
	WHOLE SAMPLE	(Sp)	(n/s)	(n/s)	-0.16549	0.13027	0.13180	(n/s)	(n/s)	(n/s)	0.36329	0.39566
	MANAGEMENT	(Ps)	(n/s)	(n/s)	(n/s)	.....	(n/s)	(n/s)	(n/s)	(n/s)	(n/s)	0.31346
	CATEGORY A	(Ps)	(n/s)	0.30452	(n/s)	.....	-0.29148	(n/s)	0.34608	0.40213	0.62919	0.53217
	CATEGORY B	(Ps)	(n/s)	(n/s)	(n/s)	.....	(n/s)	(n/s)	(n/s)	(n/s)	0.41125	0.39943
JOBSAT	WHOLE SAMPLE	(Ps)	(n/s)	0.18081	-0.11064	0.12976	(n/s)	-0.14512	0.10204	0.16255	0.30283	0.35086
	WHOLE SAMPLE	(Sp)	(n/s)	0.16341	-0.13029	0.13089	(n/s)	-0.15991	0.10964	0.15987	0.33681	0.37177
	MANAGEMENT	(Ps)	0.30648	0.47612	(n/s)	.....	(n/s)	(n/s)	(n/s)	0.47178	(n/s)	(n/s)
	CATEGORY A	(Ps)	(n/s)	0.32562	(n/s)	.....	(n/s)	(n/s)	(n/s)	0.36157	0.43598	0.44385
	CATEGORY B	(Ps)	(n/s)	0.12570	(n/s)	.....	(n/s)	-0.12160	0.09934	0.11539	0.34507	0.36668
PRSTAY	WHOLE SAMPLE	(Ps)	(n/s)	0.12827	(n/s)	(n/s)	-0.14148	(n/s)	(n/s)	(n/s)	0.30408	0.35743
	WHOLE SAMPLE	(Sp)	(n/s)	0.13529	(n/s)	(n/s)	-0.13271	(n/s)	(n/s)	(n/s)	0.29780	0.34531
	MANAGEMENT	(Ps)	(n/s)	(n/s)	(n/s)	.....	(n/s)	(n/s)	(n/s)	(n/s)	(n/s)	(n/s)
	CATEGORY A	(Ps)	(n/s)	(n/s)	(n/s)	.....	(n/s)	(n/s)	(n/s)	(n/s)	0.29675	0.41786
	CATEGORY B	(Ps)	(n/s)	0.12457	(n/s)	.....	-0.15474	(n/s)	(n/s)	(n/s)	0.31551	0.35467
LOCCONT	WHOLE SAMPLE	(Ps)	(n/s)	(n/s)	(n/s)	-0.18017	-0.17541	p < 0.10	(n/s)	(n/s)	(n/s)	0.09417
	WHOLE SAMPLE	(Sp)	(n/s)	(n/s)	(n/s)	-0.20308	-0.20344	0.08711	(n/s)	(n/s)	0.10230	0.08565
	MANAGEMENT	(Ps)	0.36123	(n/s)	(n/s)	.....	(n/s)	(n/s)	(n/s)	(n/s)	(n/s)	0.38279
	CATEGORY A	(Ps)	(n/s)	(n/s)	(n/s)	.....	0.33447	(n/s)	(n/s)	(n/s)	(n/s)	(n/s)
	CATEGORY B	(Ps)	(n/s)	(n/s)	(n/s)	.....	-0.12140	(n/s)	(n/s)	(n/s)	(n/s)	(n/s)

			MARR	AGE	LANG	LEVEL	EDUC	SITU	COURSE	YEARS	PFNPAR	FINSAT
NEEDIND	WHOLE SAMPLE	(Ps)	(n/s)	(n/s)	(n/s)	0.14265	0.17502	-0.11977	p < 0.10	(n/s)	-0.10279	(n/s)
	WHOLE SAMPLE	(Sp)	(n/s)	(n/s)	(n/s)	0.16321	0.17861	-0.11860	-0.09099	(n/s)	p < 0.10	(n/s)
	MANAGEMENT	(Ps)	0.31244	(n/s)	(n/s)	.....	(n/s)	(n/s)	(n/s)	(n/s)	(n/s)	(n/s)
	CATEGORY A	(Ps)	(n/s)	(n/s)	(n/s)	.....	(n/s)	(n/s)	(n/s)	(n/s)	(n/s)	-0.27480
	CATEGORY B	(Ps)	(n/s)	(n/s)	(n/s)	.....	(n/s)	(n/s)	(n/s)	(n/s)	-0.10236	(n/s)
AUTHORM	WHOLE SAMPLE	(Ps)	(n/s)	-0.12075	-0.12075	0.10890	0.10061	(n/s)	(n/s)	(n/s)	0.02364	0.09286
	WHOLE SAMPLE	(Sp)	(n/s)	(n/s)	-0.12912	0.13163	0.11843	(n/s)	(n/s)	(n/s)	(n/s)	(n/s)
	MANAGEMENT	(Ps)	(n/s)	(n/s)	(n/s)	.....	(n/s)	(n/s)	(n/s)	(n/s)	(n/s)	(n/s)
	CATEGORY A	(Ps)	(n/s)	(n/s)	(n/s)	.....	(n/s)	(n/s)	(n/s)	(n/s)	(n/s)	(n/s)
	CATEGORY B	(Ps)	(n/s)	(n/s)	(n/s)	.....	(n/s)	(n/s)	(n/s)	(n/s)	(n/s)	0.10661
PERCATT	WHOLE SAMPLE	(Ps)	(n/s)	(n/s)	(n/s)	(n/s)	0.10294	-0.13899	(n/s)	(n/s)	0.31695	0.25821
	WHOLE SAMPLE	(Sp)	(n/s)	(n/s)	(n/s)	(n/s)	0.13642	-0.14834	(n/s)	(n/s)	0.29632	0.24570
	MANAGEMENT	(Ps)	(n/s)	(n/s)	(n/s)	.....	(n/s)	(n/s)	(n/s)	(n/s)	(n/s)	(n/s)
	CATEGORY A	(Ps)	(n/s)	(n/s)	(n/s)	.....	(n/s)	(n/s)	(n/s)	(n/s)	0.25963	0.33395
	CATEGORY B	(Ps)	(n/s)	(n/s)	(n/s)	.....	0.10793	-0.16082	(n/s)	(n/s)	0.35387	0.26885
PERCDIF	WHOLE SAMPLE	(Ps)	(n/s)	(n/s)	-0.10035	0.08538	(n/s)	(n/s)	(n/s)	(n/s)	-0.23181	-0.18664
	WHOLE SAMPLE	(Sp)	(n/s)	(n/s)	-0.10917	0.08879	(n/s)	(n/s)	(n/s)	(n/s)	-0.22133	-0.19230
	MANAGEMENT	(Ps)	(n/s)	(n/s)	(n/s)	.....	(n/s)	(n/s)	(n/s)	(n/s)	(n/s)	(n/s)
	CATEGORY A	(Ps)	(n/s)	(n/s)	(n/s)	.....	0.30112	(n/s)	(n/s)	(n/s)	-0.47180	-0.28853
	CATEGORY B	(Ps)	(n/s)	(n/s)	(n/s)	.....	(n/s)	(n/s)	(n/s)	(n/s)	-0.20688	-0.16771
PERCEVF	WHOLE SAMPLE	(Ps)	(n/s)	0.10726	(n/s)	(n/s)	-0.08536	(n/s)	(n/s)	0.11226	0.25965	0.26962
	WHOLE SAMPLE	(Sp)	(n/s)	0.11142	(n/s)	(n/s)	(n/s)	(n/s)	(n/s)	0.08924	0.25475	0.24731
	MANAGEMENT	(Ps)	(n/s)	(n/s)	(n/s)	.....	(n/s)	(n/s)	(n/s)	0.33308	(n/s)	(n/s)
	CATEGORY A	(Ps)	(n/s)	(n/s)	(n/s)	.....	(n/s)	(n/s)	0.26803	(n/s)	0.27627	0.37115
	CATEGORY B	(Ps)	(n/s)	0.09960	(n/s)	.....	-0.14660	0.10018	(n/s)	(n/s)	0.28107	0.26610
PERCEVA	WHOLE SAMPLE	(Ps)	(n/s)	0.09791	p < 0.10	p < 0.10	-0.14828	0.11202	(n/s)	0.08903	0.30539	0.30796
	WHOLE SAMPLE	(Sp)	(n/s)	0.09815	0.09821	-0.10375	-0.15117	0.12360	(n/s)	0.10377	0.29532	0.29684
	MANAGEMENT	(Ps)	(n/s)	(n/s)	(n/s)	.....	(n/s)	(n/s)	(n/s)	(n/s)	(n/s)	(n/s)
	CATEGORY A	(Ps)	(n/s)	(n/s)	(n/s)	.....	-0.41760	(n/s)	0.33767	0.30491	0.33616	0.30466
	CATEGORY B	(Ps)	(n/s)	0.11694	(n/s)	.....	-0.12054	(n/s)	(n/s)	(n/s)	0.31170	0.32084
PEROLAP	WHOLE SAMPLE	(Ps)	(n/s)	0.08737	0.08737	-0.16171	-0.17450	0.13795	(n/s)	(n/s)	0.16782	0.12979
	WHOLE SAMPLE	(Sp)	(n/s)	(n/s)	p < 0.10	-0.16958	-0.17777	0.15918	(n/s)	(n/s)	0.16476	0.13679
	MANAGEMENT	(Ps)	(n/s)	(n/s)	(n/s)	.....	(n/s)	(n/s)	(n/s)	(n/s)	(n/s)	(n/s)
	CATEGORY A	(Ps)	(n/s)	(n/s)	(n/s)	.....	-0.29079	(n/s)	0.32419	0.32424	0.53479	0.53658
	CATEGORY B	(Ps)	(n/s)	(n/s)	(n/s)	.....	(n/s)	0.13181	(n/s)	(n/s)	0.10627	(n/s)
PERFEED	WHOLE SAMPLE	(Ps)	(n/s)	(n/s)	(n/s)	-0.17734	-0.25011	0.13146	0.09114	0.11379	0.21619	0.29339
	WHOLE SAMPLE	(Sp)	(n/s)	(n/s)	(n/s)	-0.19342	-0.23602	0.13565	0.09708	0.10789	0.24035	0.29795
	MANAGEMENT	(Ps)	(n/s)	(n/s)	(n/s)	.....	(n/s)	(n/s)	(n/s)	(n/s)	(n/s)	(n/s)
	CATEGORY A	(Ps)	(n/s)	(n/s)	(n/s)	.....	-0.45283	(n/s)	0.34159	0.32915	0.52174	0.52438
	CATEGORY B	(Ps)	(n/s)	(n/s)	-0.15560	.....	-0.14464	(n/s)	(n/s)	(n/s)	0.13830	0.25577
COMFINP	WHOLE SAMPLE	(Ps)	(n/s)	-0.12591	-0.12591	(n/s)	0.08539	(n/s)	(n/s)	(n/s)	0.34146	0.47094
	WHOLE SAMPLE	(Sp)	(n/s)	(n/s)	-0.14403	(n/s)	0.08825	(n/s)	(n/s)	(n/s)	0.35129	0.46217
	MANAGEMENT	(Ps)	(n/s)	0.29764	(n/s)	.....	(n/s)	(n/s)	(n/s)	0.34278	(n/s)	0.34470
	CATEGORY A	(Ps)	(n/s)	(n/s)	(n/s)	.....	(n/s)	(n/s)	(n/s)	(n/s)	0.53640	0.59632
	CATEGORY B	(Ps)	(n/s)	(n/s)	-0.12662	.....	(n/s)	(n/s)	(n/s)	(n/s)	0.34812	0.46960

			MARR	AGE	LANG	LEVEL	EDUC	SITU	COURSE	YEARS	PFNPAR	FINSAT
COMGOAL	WHOLE SAMPLE	(Ps)	(n/s)	0.11915	(n/s)	(n/s)	p < 0.10	(n/s)	p < 0.10	0.09497	0.37787	0.43336
	WHOLE SAMPLE	(Sp)	(n/s)	0.12528	(n/s)	(n/s)	-0.09084	(n/s)	0.09609	0.12304	0.39349	0.45004
	MANAGEMENT	(Ps)	0.34885	0.35503	(n/s)	.....	(n/s)	(n/s)	(n/s)	0.34523	0.38884	0.49907
	CATEGORY A	(Ps)	(n/s)	(n/s)	(n/s)	.....	(n/s)	(n/s)	(n/s)	(n/s)	0.43346	0.53790
	CATEGORY B	(Ps)	(n/s)	0.11507	0.10483	.....	(n/s)	(n/s)	(n/s)	(n/s)	0.37323	0.41409
COMSAFE	WHOLE SAMPLE	(Ps)	(n/s)	-0.18891	-0.18891	(n/s)	(n/s)	(n/s)	(n/s)	(n/s)	0.33588	0.39180
	WHOLE SAMPLE	(Sp)	(n/s)	p < 0.10	-0.19281	(n/s)	(n/s)	(n/s)	(n/s)	(n/s)	0.32585	0.36715
	MANAGEMENT	(Ps)	(n/s)	0.30636	(n/s)	.....	(n/s)	(n/s)	(n/s)	0.45051	(n/s)	0.29441
	CATEGORY A	(Ps)	(n/s)	(n/s)	(n/s)	.....	(n/s)	(n/s)	(n/s)	(n/s)	0.42740	0.43138
	CATEGORY B	(Ps)	(n/s)	(n/s)	-0.15098	.....	(n/s)	(n/s)	(n/s)	(n/s)	0.36314	0.40891
COMGWDP	WHOLE SAMPLE	(Ps)	(n/s)	-0.09100	-0.09100	(n/s)	(n/s)	(n/s)	(n/s)	(n/s)	0.28329	0.48231
	WHOLE SAMPLE	(Sp)	(n/s)	p < 0.10	-0.08813	(n/s)	(n/s)	(n/s)	(n/s)	(n/s)	0.29732	0.50422
	MANAGEMENT	(Ps)	(n/s)	(n/s)	(n/s)	.....	(n/s)	(n/s)	(n/s)	(n/s)	(n/s)	0.49100
	CATEGORY A	(Ps)	(n/s)	(n/s)	(n/s)	.....	-0.26894	(n/s)	(n/s)	0.27395	0.45658	0.54493
	CATEGORY B	(Ps)	(n/s)	(n/s)	-0.10943	.....	(n/s)	(n/s)	(n/s)	(n/s)	0.27208	0.47793
SELPERF	WHOLE SAMPLE	(Ps)	0.11188	0.12764	0.12764	(n/s)	-0.16886	p < 0.10	0.10591	0.08560	0.08642	0.09228
	WHOLE SAMPLE	(Sp)	0.14117	0.20697	0.13076	(n/s)	-0.18057	0.09441	0.11145	0.12162	p < 0.10	0.09115
	MANAGEMENT	(Ps)	(n/s)	(n/s)	(n/s)	.....	(n/s)	(n/s)	(n/s)	(n/s)	(n/s)	(n/s)
	CATEGORY A	(Ps)	(n/s)	(n/s)	(n/s)	.....	-0.28914	(n/s)	(n/s)	0.25884	0.44379	(n/s)
	CATEGORY B	(Ps)	0.11354	0.21926	0.14413	.....	-0.18936	(n/s)	0.12750	(n/s)	(n/s)	0.08996
SUPPERF	WHOLE SAMPLE	(Ps)	(n/s)	0.20432	0.20432	-0.15153	-0.17084	(n/s)	0.16262	p < 0.10	0.12580	0.11246
	WHOLE SAMPLE	(Sp)	(n/s)	0.14218	0.20076	-0.12731	-0.16130	(n/s)	0.15996	0.12037	0.12669	0.10457
	MANAGEMENT	(Ps)	(n/s)	(n/s)	(n/s)	.....	(n/s)	(n/s)	0.36959	(n/s)	(n/s)	(n/s)
	CATEGORY A	(Ps)	(n/s)	(n/s)	(n/s)	.....	(n/s)	(n/s)	(n/s)	(n/s)	(n/s)	(n/s)
	CATEGORY B	(Ps)	(n/s)	0.16699	0.13084	.....	(n/s)	(n/s)	0.10530	0.09593	0.13221	0.13119
NPERCATT	WHOLE SAMPLE	(Ps)	(n/s)	(n/s)	(n/s)	0.11651	0.13652	-0.09718	(n/s)	(n/s)	0.10999	0.09135
	WHOLE SAMPLE	(Sp)	(n/s)	(n/s)	-0.11330	0.14861	0.17798	-0.12130	(n/s)	(n/s)	0.09134	(n/s)
	MANAGEMENT	(Ps)	(n/s)	(n/s)	(n/s)	.....	(n/s)	(n/s)	(n/s)	(n/s)	(n/s)	(n/s)
	CATEGORY A	(Ps)	(n/s)	(n/s)	(n/s)	.....	(n/s)	0.26534	(n/s)	(n/s)	(n/s)	(n/s)
	CATEGORY B	(Ps)	(n/s)	(n/s)	(n/s)	.....	(n/s)	-0.10619	(n/s)	(n/s)	0.16013	0.11322
NPERCEVF	WHOLE SAMPLE	(Ps)	(n/s)	0.11677	(n/s)	(n/s)	-0.13869	0.10996	(n/s)	0.11347	0.32713	0.33374
	WHOLE SAMPLE	(Sp)	(n/s)	0.11608	(n/s)	(n/s)	-0.12028	0.11515	(n/s)	0.11035	0.31771	0.31047
	MANAGEMENT	(Ps)	(n/s)	(n/s)	(n/s)	.....	(n/s)	(n/s)	(n/s)	(n/s)	(n/s)	(n/s)
	CATEGORY A	(Ps)	(n/s)	(n/s)	(n/s)	.....	-0.33243	(n/s)	0.32449	(n/s)	0.32743	0.35295
	CATEGORY B	(Ps)	(n/s)	0.12665	(n/s)	.....	-0.15248	0.10755	(n/s)	0.10296	0.34536	0.34390
PERMCOP	WHOLE SAMPLE	(Ps)	(n/s)	0.10330	-0.08612	(n/s)	(n/s)	(n/s)	0.08761	0.09317	0.44116	0.57878
	WHOLE SAMPLE	(Sp)	(n/s)	0.11400	-0.09282	(n/s)	(n/s)	(n/s)	p < 0.10	0.12078	0.42547	0.58623
	MANAGEMENT	(Ps)	0.38414	0.43591	(n/s)	.....	(n/s)	(n/s)	(n/s)	0.40357	0.34451	0.60759
	CATEGORY A	(Ps)	(n/s)	(n/s)	(n/s)	.....	(n/s)	(n/s)	(n/s)	0.26148	0.54335	0.62923
	CATEGORY B	(Ps)	(n/s)	(n/s)	(n/s)	.....	(n/s)	(n/s)	(n/s)	(n/s)	0.44919	0.57794
GRNPERF	WHOLE SAMPLE	(Ps)	0.08556	0.21318	0.14480	p < 0.10	-0.21250	p < 0.10	0.09015	0.11069	0.20872	0.23374
	WHOLE SAMPLE	(Sp)	0.11283	0.22902	0.17511	-0.09298	-0.21667	0.10732	0.10354	0.13017	0.18737	0.22670
	MANAGEMENT	(Ps)	(n/s)	(n/s)	(n/s)	.....	(n/s)	(n/s)	(n/s)	(n/s)	(n/s)	(n/s)
	CATEGORY A	(Ps)	(n/s)	(n/s)	(n/s)	.....	-0.29924	(n/s)	(n/s)	0.30903	0.48615	0.33960
	CATEGORY B	(Ps)	(n/s)	0.24360	0.14622	.....	-0.22244	(n/s)	(n/s)	0.09861	0.18808	0.22895

			PPGOAL	PPSAFE	PPAGWD	GWDSAT	ATTCOM	JOBSAT	PRSTAY	LOCCONT	NEEDIND	AUTHORM
FINSAT	WHOLE SAMPLE	(Ps)										
	WHOLE SAMPLE	(Sp)										
	MANAGEMENT	(Ps)										
	CATEGORY A	(Ps)										
	CATEGORY B	(Ps)										
PPGOAL	WHOLE SAMPLE	(Ps)	1.00000									
	WHOLE SAMPLE	(Sp)	1.00000									
	MANAGEMENT	(Ps)	1.00000									
	CATEGORY A	(Ps)	1.00000									
	CATEGORY B	(Ps)	1.00000									
PPSAFE	WHOLE SAMPLE	(Ps)	0.59715	1.00000								
	WHOLE SAMPLE	(Sp)	0.56958	1.00000								
	MANAGEMENT	(Ps)	0.64611	1.00000								
	CATEGORY A	(Ps)	0.51866	1.00000								
	CATEGORY B	(Ps)	0.61248	1.00000								
PPAGWD	WHOLE SAMPLE	(Ps)	0.50558	0.48304	1.00000							
	WHOLE SAMPLE	(Sp)	0.46428	0.45318	1.00000							
	MANAGEMENT	(Ps)	0.48704	0.28560	1.00000							
	CATEGORY A	(Ps)	0.51849	0.35540	1.00000							
	CATEGORY B	(Ps)	0.50450	0.52689	1.00000							
GWDSAT	WHOLE SAMPLE	(Ps)	0.45303	0.40116	0.38198	1.00000						
	WHOLE SAMPLE	(Sp)	0.42462	0.38752	0.35630	1.00000						
	MANAGEMENT	(Ps)	0.50160	0.34194	0.37160	1.00000						
	CATEGORY A	(Ps)	0.57361	0.40683	0.36309	1.00000						
	CATEGORY B	(Ps)	0.44724	0.40608	0.39415	1.00000						
ATTCOM	WHOLE SAMPLE	(Ps)	0.37849	0.32361	0.32151	0.21658	1.00000					
	WHOLE SAMPLE	(Sp)	0.39171	0.30762	0.36277	0.21060	1.00000					
	MANAGEMENT	(Ps)	0.32872	0.28484	(n/s)	(n/s)	1.00000					
	CATEGORY A	(Ps)	0.48075	0.55061	0.50162	0.36057	1.00000					
	CATEGORY B	(Ps)	0.36631	0.31914	0.30684	0.21976	1.00000					
JOBSAT	WHOLE SAMPLE	(Ps)	0.30078	0.27771	0.38011	0.18339	0.39508	1.00000				
	WHOLE SAMPLE	(Sp)	0.32366	0.28983	0.37181	0.22952	0.42588	1.00000				
	MANAGEMENT	(Ps)	(n/s)	(n/s)	(n/s)	(n/s)	0.37196	1.00000				
	CATEGORY A	(Ps)	0.51092	0.30695	0.48734	0.38899	0.71600	1.00000				
	CATEGORY B	(Ps)	0.27248	0.31404	0.36975	0.17858	0.32361	1.00000				
PRSTAY	WHOLE SAMPLE	(Ps)	0.33573	0.28780	0.30075	0.17071	0.39953	0.39722	1.00000			
	WHOLE SAMPLE	(Sp)	0.30489	0.26502	0.26141	0.19191	0.37829	0.40347	1.00000			
	MANAGEMENT	(Ps)	0.30410	(n/s)	(n/s)	(n/s)	(n/s)	0.37425	1.00000			
	CATEGORY A	(Ps)	0.39223	(n/s)	(n/s)	0.26003	0.40621	0.61485	1.00000			
	CATEGORY B	(Ps)	0.33375	0.31371	0.32893	0.15849	0.42315	0.38595	1.00000			
LOCCONT	WHOLE SAMPLE	(Ps)	0.09824	0.14802	(n/s)	0.15951	(n/s)	(n/s)	(n/s)	1.00000		
	WHOLE SAMPLE	(Sp)	0.12587	0.18107	(n/s)	0.13728	(n/s)	(n/s)	(n/s)	1.00000		
	MANAGEMENT	(Ps)	(n/s)	0.29583	0.28193	(n/s)	(n/s)	(n/s)	(n/s)	1.00000		
	CATEGORY A	(Ps)	-0.28632	-0.34207	(n/s)	(n/s)	(n/s)	(n/s)	(n/s)	1.00000		
	CATEGORY B	(Ps)	0.15251	0.17378	(n/s)	0.17005	(n/s)	(n/s)	(n/s)	1.00000		

			PPGOAL	PPSAFE	PPAGWD	GWDSAT	ATTCOM	JOBSAT	PRSTAY	LOCCONT	NEEDIND	AUTHORM
NEEDIND	WHOLE SAMPLE	(Ps)	-0.08769	-0.10192	-0.10984	(n/s)	(n/s)	(n/s)	-0.11418	(n/s)	1.00000	
	WHOLE SAMPLE	(Sp)	(n/s)	p < 0.10	p < 0.10	(n/s)	(n/s)	(n/s)	-0.09609	(n/s)	1.00000	
	MANAGEMENT	(Ps)	(n/s)	(n/s)	(n/s)	(n/s)	(n/s)	(n/s)	(n/s)	(n/s)	1.00000	
	CATEGORY A	(Ps)	-0.28361	(n/s)	(n/s)	(n/s)	(n/s)	(n/s)	(n/s)	(n/s)	1.00000	
	CATEGORY B	(Ps)	(n/s)	(n/s)	-0.12443	(n/s)	(n/s)	(n/s)	(n/s)	(n/s)	1.00000	
AUTHORM	WHOLE SAMPLE	(Ps)	0.13301	0.08922	(n/s)	0.13846	(n/s)	(n/s)	(n/s)	(n/s)	0.15475	1.00000
	WHOLE SAMPLE	(Sp)	0.11780	p < 0.10	(n/s)	0.12204	(n/s)	(n/s)	(n/s)	(n/s)	0.11654	1.00000
	MANAGEMENT	(Ps)	(n/s)	(n/s)	(n/s)	(n/s)	(n/s)	(n/s)	(n/s)	(n/s)	(n/s)	1.00000
	CATEGORY A	(Ps)	(n/s)	(n/s)	(n/s)	0.27299	(n/s)	0.32735	(n/s)	(n/s)	(n/s)	1.00000
	CATEGORY B	(Ps)	0.14660	0.10632	(n/s)	0.14169	(n/s)	(n/s)	(n/s)	(n/s)	0.15647	1.00000
PERCATT	WHOLE SAMPLE	(Ps)	0.20175	0.18407	0.31434	0.09525	0.31168	0.33355	0.24766	-0.08548	(n/s)	(n/s)
	WHOLE SAMPLE	(Sp)	0.19709	0.17315	0.32222	0.08709	0.29850	0.30734	0.22809	p < 0.10	(n/s)	(n/s)
	MANAGEMENT	(Ps)	(n/s)	(n/s)	(n/s)	(n/s)	(n/s)	(n/s)	(n/s)	(n/s)	0.29189	(n/s)
	CATEGORY A	(Ps)	0.36576	0.36554	0.50629	(n/s)	0.45257	0.40389	0.37554	-0.25963	(n/s)	(n/s)
	CATEGORY B	(Ps)	0.19941	0.20418	0.31830	0.10081	0.28987	0.32647	0.24678	(n/s)	(n/s)	(n/s)
PERCDIF	WHOLE SAMPLE	(Ps)	-0.12348	-0.13028	-0.21937	(n/s)	-0.21043	-0.14647	-0.16376	0.10117	(n/s)	p < 0.10
	WHOLE SAMPLE	(Sp)	-0.15362	-0.13524	-0.23174	(n/s)	-0.20576	-0.16038	-0.15240	(n/s)	(n/s)	0.08924
	MANAGEMENT	(Ps)	(n/s)	(n/s)	(n/s)	(n/s)	(n/s)	-0.40757	-0.33202	(n/s)	(n/s)	(n/s)
	CATEGORY A	(Ps)	-0.25020	-0.29651	-0.39409	(n/s)	-0.32882	-0.27064	(n/s)	0.44219	(n/s)	(n/s)
	CATEGORY B	(Ps)	-0.11764	-0.10859	-0.20849	(n/s)	-0.21994	-0.13726	-0.14375	(n/s)	(n/s)	0.10055
PERCEVF	WHOLE SAMPLE	(Ps)	0.46572	0.36499	0.34224	0.31196	0.33371	0.39720	0.35015	(n/s)	-0.11971	(n/s)
	WHOLE SAMPLE	(Sp)	0.42856	0.34479	0.31264	0.28895	0.31837	0.38024	0.31321	(n/s)	p < 0.10	(n/s)
	MANAGEMENT	(Ps)	0.44751	(n/s)	0.34169	0.47831	(n/s)	0.42205	0.29393	(n/s)	(n/s)	(n/s)
	CATEGORY A	(Ps)	0.67618	0.40207	0.36671	0.38692	0.50717	0.53328	0.48458	(n/s)	-0.37566	(n/s)
	CATEGORY B	(Ps)	0.43309	0.38193	0.33693	0.30528	0.31602	0.37090	0.33738	(n/s)	(n/s)	(n/s)
PERCEVA	WHOLE SAMPLE	(Ps)	0.44575	0.40297	0.36393	0.31267	0.36419	0.32406	0.36091	0.18079	(n/s)	(n/s)
	WHOLE SAMPLE	(Sp)	0.43954	0.40864	0.35954	0.29721	0.32428	0.32211	0.32348	0.19450	(n/s)	(n/s)
	MANAGEMENT	(Ps)	(n/s)	(n/s)	(n/s)	(n/s)	(n/s)	(n/s)	(n/s)	(n/s)	(n/s)	0.31236
	CATEGORY A	(Ps)	0.57961	0.49285	0.47836	0.30743	0.56009	0.60759	0.43742	(n/s)	-0.36465	(n/s)
	CATEGORY B	(Ps)	0.45937	0.41725	0.37968	0.32855	0.35748	0.31789	0.37244	0.24435	(n/s)	(n/s)
PEROLAP	WHOLE SAMPLE	(Ps)	0.23786	0.25602	0.27759	0.15059	0.12209	0.18793	0.20557	(n/s)	-0.10262	(n/s)
	WHOLE SAMPLE	(Sp)	0.21890	0.25716	0.24997	0.15973	0.14913	0.17878	0.20612	(n/s)	-0.11698	(n/s)
	MANAGEMENT	(Ps)	0.32951	(n/s)	0.60715	(n/s)	(n/s)	(n/s)	(n/s)	(n/s)	(n/s)	(n/s)
	CATEGORY A	(Ps)	0.36877	0.34269	0.42275	(n/s)	0.50277	0.48528	0.43420	-0.35996	(n/s)	(n/s)
	CATEGORY B	(Ps)	0.22486	0.25007	0.24587	0.13675	0.11818	0.19384	0.17953	(n/s)	(n/s)	(n/s)
PERFEED	WHOLE SAMPLE	(Ps)	0.33466	0.27284	0.30753	0.24349	0.24709	0.26269	0.26970	0.20816	-0.17010	(n/s)
	WHOLE SAMPLE	(Sp)	0.35640	0.30883	0.29046	0.25354	0.26448	0.27030	0.26876	0.22806	-0.14410	(n/s)
	MANAGEMENT	(Ps)	(n/s)	(n/s)	(n/s)	(n/s)	(n/s)	(n/s)	0.26474	(n/s)	(n/s)	(n/s)
	CATEGORY A	(Ps)	0.46449	0.46661	0.55594	0.31171	0.57074	0.54128	0.40357	(n/s)	-0.31766	(n/s)
	CATEGORY B	(Ps)	0.35513	0.25605	0.31451	0.23992	0.23926	0.28090	0.24704	0.25473	-0.12102	(n/s)
COMFINP	WHOLE SAMPLE	(Ps)	0.34304	0.30792	0.27770	0.26730	0.35698	0.32454	0.22427	0.16390	(n/s)	(n/s)
	WHOLE SAMPLE	(Sp)	0.35768	0.31870	0.29601	0.27246	0.35258	0.34764	0.21902	0.16514	(n/s)	(n/s)
	MANAGEMENT	(Ps)	(n/s)	(n/s)	(n/s)	(n/s)	0.29030	0.35143	(n/s)	(n/s)	(n/s)	(n/s)
	CATEGORY A	(Ps)	0.48074	0.31514	0.32923	0.28236	0.44805	0.35453	0.26229	(n/s)	(n/s)	(n/s)
	CATEGORY B	(Ps)	0.33722	0.34081	0.28560	0.27216	0.34569	0.31597	0.22361	0.20210	(n/s)	(n/s)

			PPGOAL	PPSAFE	PPAGWD	GWDSAT	ATTCOM	JOBSAT	PRSTAY	LOCCONT	NEEDIND	AUTHORM
COMGOAL	WHOLE SAMPLE	(Ps)	0.57404	0.43219	0.31156	0.30983	0.37527	0.35632	0.34316	0.17177	-0.11063	(n/s)
	WHOLE SAMPLE	(Sp)	0.57644	0.44252	0.32035	0.32788	0.36706	0.38093	0.33032	0.17510	-0.09043	(n/s)
	MANAGEMENT	(Ps)	0.51338	0.37698	(n/s)	0.43679	(n/s)	0.44240	0.38849	(n/s)	(n/s)	(n/s)
	CATEGORY A	(Ps)	0.71433	0.59826	0.34288	0.38807	0.48603	0.46968	0.44774	(n/s)	-0.30466	(n/s)
	CATEGORY B	(Ps)	0.55935	0.41754	0.31356	0.29897	0.37644	0.34577	0.32673	0.21319	(n/s)	(n/s)
COMSAFE	WHOLE SAMPLE	(Ps)	0.38447	0.49353	0.31208	0.29441	0.39958	0.40407	0.25811	(n/s)	(n/s)	0.10830
	WHOLE SAMPLE	(Sp)	0.37085	0.46861	0.31429	0.26912	0.37982	0.44584	0.26753	(n/s)	(n/s)	0.12752
	MANAGEMENT	(Ps)	(n/s)	0.43159	-0.28236	(n/s)	0.28146	(n/s)	0.28259	(n/s)	(n/s)	(n/s)
	CATEGORY A	(Ps)	0.50434	0.61372	0.36890	0.43889	0.53095	0.50963	0.39659	(n/s)	(n/s)	0.30149
	CATEGORY B	(Ps)	0.38066	0.50698	0.33901	0.30204	0.37958	0.38746	0.25129	(n/s)	(n/s)	(n/s)
COMGWDP	WHOLE SAMPLE	(Ps)	0.35841	0.30783	0.28926	0.20711	0.47238	0.39824	0.35062	(n/s)	-0.11659	(n/s)
	WHOLE SAMPLE	(Sp)	0.39316	0.32622	0.31866	0.23022	0.47158	0.39304	0.32827	(n/s)	-0.10465	(n/s)
	MANAGEMENT	(Ps)	(n/s)	(n/s)	(n/s)	(n/s)	0.57104	0.28736	(n/s)	(n/s)	(n/s)	(n/s)
	CATEGORY A	(Ps)	0.57493	0.57091	0.38781	0.36914	0.71656	0.58111	0.49607	(n/s)	(n/s)	(n/s)
	CATEGORY B	(Ps)	0.33528	0.28089	0.28886	0.20249	0.43106	0.38216	0.35054	0.09346	-0.13575	(n/s)
SELPERF	WHOLE SAMPLE	(Ps)	0.19260	0.22165	0.25428	0.09413	(n/s)	0.19637	0.17197	p < 0.10	(n/s)	-0.09221
	WHOLE SAMPLE	(Sp)	0.17781	0.19406	0.22403	p < 0.10	(n/s)	0.15972	0.16749	0.11340	(n/s)	-0.12969
	MANAGEMENT	(Ps)	(n/s)	(n/s)	(n/s)	(n/s)	(n/s)	0.41835	(n/s)	(n/s)	(n/s)	(n/s)
	CATEGORY A	(Ps)	0.30240	0.53206	0.56083	0.30572	0.61200	0.56275	0.26884	-0.29588	(n/s)	(n/s)
	CATEGORY B	(Ps)	0.19372	0.20667	0.23716	(n/s)	(n/s)	0.16239	0.16548	0.10615	(n/s)	-0.11495
SUPPERF	WHOLE SAMPLE	(Ps)	(n/s)	0.10480	0.14847	0.09749	(n/s)	0.12063	(n/s)	(n/s)	-0.11441	(n/s)
	WHOLE SAMPLE	(Sp)	(n/s)	0.10451	0.17867	0.09946	(n/s)	0.12330	(n/s)	(n/s)	-0.12878	(n/s)
	MANAGEMENT	(Ps)	(n/s)	(n/s)	(n/s)	(n/s)	(n/s)	(n/s)	(n/s)	(n/s)	(n/s)	(n/s)
	CATEGORY A	(Ps)	(n/s)	(n/s)	0.34809	(n/s)	(n/s)	(n/s)	(n/s)	(n/s)	(n/s)	(n/s)
	CATEGORY B	(Ps)	0.09841	0.10722	0.14712	(n/s)	(n/s)	0.19015	0.10621	(n/s)	-0.10520	(n/s)
NPERCATT	WHOLE SAMPLE	(Ps)	0.08901	(n/s)	0.11739	(n/s)	0.12199	0.19267	0.09965	(n/s)	(n/s)	(n/s)
	WHOLE SAMPLE	(Sp)	(n/s)	(n/s)	0.10262	(n/s)	0.12814	0.15973	(n/s)	(n/s)	(n/s)	(n/s)
	MANAGEMENT	(Ps)	(n/s)	(n/s)	(n/s)	(n/s)	(n/s)	(n/s)	(n/s)	(n/s)	(n/s)	(n/s)
	CATEGORY A	(Ps)	(n/s)	(n/s)	(n/s)	(n/s)	(n/s)	(n/s)	(n/s)	(n/s)	(n/s)	(n/s)
	CATEGORY B	(Ps)	(n/s)	0.10102	0.12610	(n/s)	(n/s)	0.19064	0.11209	(n/s)	(n/s)	(n/s)
NPERCEVF	WHOLE SAMPLE	(Ps)	0.52042	0.44273	0.40608	0.35776	0.40204	0.40736	0.40804	0.13162	-0.11101	(n/s)
	WHOLE SAMPLE	(Sp)	0.50310	0.44451	0.38422	0.33738	0.36293	0.40138	0.35956	0.13892	(n/s)	(n/s)
	MANAGEMENT	(Ps)	(n/s)	(n/s)	(n/s)	(n/s)	(n/s)	(n/s)	(n/s)	(n/s)	(n/s)	(n/s)
	CATEGORY A	(Ps)	0.65755	0.47866	0.45364	0.36193	0.56735	0.60760	0.48427	(n/s)	-0.39053	(n/s)
	CATEGORY B	(Ps)	0.51840	0.46515	0.41797	0.36854	0.39293	0.39428	0.41343	0.20206	(n/s)	(n/s)
PERMCOP	WHOLE SAMPLE	(Ps)	0.56415	0.51032	0.39092	0.35602	0.52330	0.48439	0.39414	0.14762	-0.10713	(n/s)
	WHOLE SAMPLE	(Sp)	0.56250	0.49142	0.40385	0.36878	0.50422	0.51017	0.37794	0.14775	-0.07014	(n/s)
	MANAGEMENT	(Ps)	0.42921	0.37241	(n/s)	(n/s)	0.50772	0.48723	0.34529	(n/s)	(n/s)	(n/s)
	CATEGORY A	(Ps)	0.70149	0.63708	0.42251	0.44031	0.64757	0.57237	0.49015	(n/s)	-0.27010	0.26532
	CATEGORY B	(Ps)	0.55174	0.51604	0.40496	0.35655	0.50524	0.47111	0.38708	0.19649	-0.10557	(n/s)
GRNPERF	WHOLE SAMPLE	(Ps)	0.30099	0.30673	0.34313	0.15654	0.19980	0.33362	0.55764	0.08958	-0.10514	(n/s)
	WHOLE SAMPLE	(Sp)	0.27338	0.27275	0.30058	0.13531	0.17262	0.30159	0.52934	0.11105	-0.09467	(n/s)
	MANAGEMENT	(Ps)	(n/s)	(n/s)	(n/s)	(n/s)	(n/s)	0.52888	0.53621	(n/s)	(n/s)	(n/s)
	CATEGORY A	(Ps)	0.44500	0.45499	0.56869	0.38598	0.66779	0.71766	0.68168	-0.26432	(n/s)	(n/s)
	CATEGORY B	(Ps)	0.29988	0.30313	0.33798	0.13901	0.16450	0.30586	0.54627	0.11139	(n/s)	(n/s)

			PERCATT	PERCDIF	PERCEVF	PERCEVA	PEROLAP	PERFEED	COMFINP	COMGOAL	COMSAFE	COMGWDP
NEEDIND	WHOLE SAMPLE	(Ps)										
	WHOLE SAMPLE	(Sp)										
	MANAGEMENT	(Ps)										
	CATEGORY A	(Ps)										
	CATEGORY B	(Ps)										
AUTHORM	WHOLE SAMPLE	(Ps)										
	WHOLE SAMPLE	(Sp)										
	MANAGEMENT	(Ps)										
	CATEGORY A	(Ps)										
	CATEGORY B	(Ps)										
PERCATT	WHOLE SAMPLE	(Ps)	1.00000									
	WHOLE SAMPLE	(Sp)	1.00000									
	MANAGEMENT	(Ps)	1.00000									
	CATEGORY A	(Ps)	1.00000									
	CATEGORY B	(Ps)	1.00000									
PERCDIF	WHOLE SAMPLE	(Ps)	-0.32684	1.00000								
	WHOLE SAMPLE	(Sp)	-0.29885	1.00000								
	MANAGEMENT	(Ps)	(n/s)	1.00000								
	CATEGORY A	(Ps)	-0.47587	1.00000								
	CATEGORY B	(Ps)	-0.33114	1.00000								
PERCEVF	WHOLE SAMPLE	(Ps)	0.23281	-0.14656	1.00000							
	WHOLE SAMPLE	(Sp)	0.22639	-0.13514	1.00000							
	MANAGEMENT	(Ps)	0.28378	(n/s)	1.00000							
	CATEGORY A	(Ps)	0.39734	-0.32712	1.00000							
	CATEGORY B	(Ps)	0.20454	-0.13126	1.00000							
PERCEVA	WHOLE SAMPLE	(Ps)	0.25604	-0.12905	0.51572	1.00000						
	WHOLE SAMPLE	(Sp)	0.23356	-0.13161	0.48321	1.00000						
	MANAGEMENT	(Ps)	(n/s)	(n/s)	0.31427	1.00000						
	CATEGORY A	(Ps)	0.43422	-0.39433	0.78729	1.00000						
	CATEGORY B	(Ps)	0.24086	-0.10118	0.48422	1.00000						
PEROLAP	WHOLE SAMPLE	(Ps)	0.16647	-0.12021	0.31765	0.31644	1.00000					
	WHOLE SAMPLE	(Sp)	0.11703	-0.10443	0.28297	0.32076	1.00000					
	MANAGEMENT	(Ps)	(n/s)	(n/s)	(n/s)	(n/s)	1.00000					
	CATEGORY A	(Ps)	0.40826	-0.31273	0.43354	0.50013	1.00000					
	CATEGORY B	(Ps)	0.17944	(n/s)	0.32662	0.30609	1.00000					
PERFEED	WHOLE SAMPLE	(Ps)	0.13256	-0.11045	0.35303	0.48913	0.26889	1.00000				
	WHOLE SAMPLE	(Sp)	0.13519	-0.12993	0.34013	0.49550	0.28061	1.00000				
	MANAGEMENT	(Ps)	(n/s)	(n/s)	0.46126	(n/s)	(n/s)	1.00000				
	CATEGORY A	(Ps)	0.50274	-0.29673	0.51306	0.69416	0.53812	1.00000				
	CATEGORY B	(Ps)	0.09562	(n/s)	0.33583	0.44187	0.21964	1.00000				
COMFINP	WHOLE SAMPLE	(Ps)	0.29113	-0.18635	0.22995	0.33334	0.12047	0.39296	1.00000			
	WHOLE SAMPLE	(Sp)	0.28860	-0.17234	0.21332	0.32406	0.11486	0.41602	1.00000			
	MANAGEMENT	(Ps)	0.29272	-0.31908	(n/s)	(n/s)	(n/s)	(n/s)	1.00000			
	CATEGORY A	(Ps)	0.26744	(n/s)	0.39855	0.46923	0.30871	0.64650	1.00000			
	CATEGORY B	(Ps)	0.29438	-0.18491	0.19994	0.33846	0.11657	0.39032	1.00000			

APPENDIX C1-9

			PERCATT	PERCDIF	PERCEVF	PERCEVA	PEROLAP	PERFEED	COMFINP	COMGOAL	COMSAFE	COMGWDP
COMGOAL	WHOLE SAMPLE	(Ps)	0.23766	-0.17074	0.50543	0.55605	0.18761	0.41815	0.51312	1.00000		
	WHOLE SAMPLE	(Sp)	0.23301	-0.15154	0.46208	0.50991	0.20420	0.47119	0.51967	1.00000		
	MANAGEMENT	(Ps)	0.29028	(n/s)	0.57527	(n/s)	(n/s)	(n/s)	0.46622	1.00000		
	CATEGORY A	(Ps)	0.43023	(n/s)	0.70306	0.68818	0.52488	0.66588	0.66979	1.00000		
	CATEGORY B	(Ps)	0.21436	-0.16987	0.47072	0.56540	0.14526	0.39621	0.49531	1.00000		
COMSAFE	WHOLE SAMPLE	(Ps)	0.29383	-0.08395	0.40210	0.39085	0.21026	0.28174	0.35931	0.42453	1.00000	
	WHOLE SAMPLE	(Sp)	0.28226	p < 0.10	0.39741	0.37764	0.20266	0.32319	0.34008	0.43867	1.00000	
	MANAGEMENT	(Ps)	(n/s)	(n/s)	(n/s)	(n/s)	(n/s)	(n/s)	(n/s)	0.35729	1.00000	
	CATEGORY A	(Ps)	0.47057	-0.37515	0.41229	0.50443	0.27143	0.45947	0.46058	0.64203	1.00000	
	CATEGORY B	(Ps)	0.27116	(n/s)	0.41059	0.40310	0.26581	0.30583	0.35467	0.41161	1.00000	
COMGWDP	WHOLE SAMPLE	(Ps)	0.26874	-0.17574	0.33170	0.34753	0.13093	0.43193	0.43126	0.47088	0.41796	1.00000
	WHOLE SAMPLE	(Sp)	0.26832	-0.20009	0.31505	0.34163	0.15719	0.42436	0.45255	0.50586	0.42201	1.00000
	MANAGEMENT	(Ps)	(n/s)	-0.29186	(n/s)	0.44428	(n/s)	0.35717	(n/s)	0.34892	(n/s)	1.00000
	CATEGORY A	(Ps)	0.47351	(n/s)	0.53056	0.58911	0.40359	0.66042	0.46125	0.67425	0.61625	1.00000
	CATEGORY B	(Ps)	0.24609	-0.17621	0.30665	0.30505	0.10691	0.41567	0.43916	0.44754	0.41263	1.00000
SELPERF	WHOLE SAMPLE	(Ps)	0.12241	-0.15169	0.20174	0.26833	0.17591	0.22051	0.12720	0.20715	0.16236	0.16979
	WHOLE SAMPLE	(Sp)	p < 0.10	-0.14114	0.17843	0.24763	0.13934	0.23100	0.09191	0.17751	0.14851	0.17044
	MANAGEMENT	(Ps)	(n/s)	(n/s)	(n/s)	(n/s)	(n/s)	(n/s)	(n/s)	(n/s)	(n/s)	(n/s)
	CATEGORY A	(Ps)	0.40370	-0.49849	0.36962	0.52631	0.27741	0.45492	(n/s)	0.31871	0.54782	0.41215
	CATEGORY B	(Ps)	0.10164	-0.11722	0.19981	0.26196	0.16912	0.22049	0.12264	0.20620	0.14006	0.15543
SUPPERF	WHOLE SAMPLE	(Ps)	0.09388	(n/s)	(n/s)	(n/s)	0.10697	0.15167	(n/s)	0.10724	0.08961	(n/s)
	WHOLE SAMPLE	(Sp)	0.08608	(n/s)	(n/s)	(n/s)	0.10199	0.15763	(n/s)	0.12831	0.08669	(n/s)
	MANAGEMENT	(Ps)	(n/s)	(n/s)	(n/s)	(n/s)	(n/s)	(n/s)	(n/s)	(n/s)	(n/s)	(n/s)
	CATEGORY A	(Ps)	(n/s)	(n/s)	(n/s)	(n/s)	(n/s)	(n/s)	(n/s)	(n/s)	(n/s)	(n/s)
	CATEGORY B	(Ps)	0.11417	(n/s)	(n/s)	(n/s)	(n/s)	0.11268	0.09412	0.13145	0.13133	(n/s)
NPERCATT	WHOLE SAMPLE	(Ps)	0.66623	0.48704	0.10022	0.13479	(n/s)	(n/s)	0.12200	(n/s)	0.20529	0.10968
	WHOLE SAMPLE	(Sp)	0.66863	0.44667	0.10335	0.09948	(n/s)	(n/s)	0.12157	(n/s)	0.20085	0.08947
	MANAGEMENT	(Ps)	0.76399	0.51914	(n/s)	(n/s)	(n/s)	(n/s)	(n/s)	(n/s)	(n/s)	(n/s)
	CATEGORY A	(Ps)	0.68274	0.31774	(n/s)	(n/s)	(n/s)	0.29548	(n/s)	0.26731	(n/s)	0.37421
	CATEGORY B	(Ps)	0.65541	0.49564	(n/s)	0.14071	0.10271	(n/s)	0.12295	(n/s)	0.19442	(n/s)
NPERCEVF	WHOLE SAMPLE	(Ps)	0.28176	-0.15602	0.83040	0.90561	0.36303	0.49284	0.33061	0.61181	0.45322	0.39021
	WHOLE SAMPLE	(Sp)	0.25819	-0.15739	0.81662	0.88011	0.34172	0.48066	0.31488	0.55944	0.43562	0.37418
	MANAGEMENT	(Ps)	(n/s)	(n/s)	0.73977	0.87126	(n/s)	0.69896	(n/s)	0.29710	(n/s)	0.41709
	CATEGORY A	(Ps)	0.44178	-0.38550	0.93111	0.95795	0.49761	0.64940	0.46305	0.73429	0.49028	0.59541
	CATEGORY B	(Ps)	0.26055	-0.13209	0.81772	0.89959	0.36441	0.45833	0.32248	0.60693	0.47014	0.35376
PERMCOP	WHOLE SAMPLE	(Ps)	0.35074	-0.20280	0.50195	0.55232	0.21605	0.50322	0.72492	0.83907	0.70577	0.75746
	WHOLE SAMPLE	(Sp)	0.33032	-0.18931	0.45983	0.50814	0.21123	0.52357	0.71980	0.83912	0.67145	0.78108
	MANAGEMENT	(Ps)	0.37418	(n/s)	0.47959	(n/s)	(n/s)	0.34830	0.61618	0.82691	0.59941	0.68374
	CATEGORY A	(Ps)	0.49360	-0.28737	0.64328	0.69220	0.47706	0.73640	0.76021	0.92687	0.78971	0.83565
	CATEGORY B	(Ps)	0.33041	-0.19870	0.47737	0.55193	0.20802	0.49824	0.72428	0.82809	0.70568	0.75064
GRNPERF	WHOLE SAMPLE	(Ps)	0.21021	-0.19526	0.30820	0.37020	0.23687	0.30395	0.20253	0.31832	0.24568	0.28523
	WHOLE SAMPLE	(Sp)	0.16326	-0.18985	0.26220	0.33154	0.20756	0.30631	0.17453	0.28746	0.22860	0.27352
	MANAGEMENT	(Ps)	(n/s)	-0.36681	(n/s)	(n/s)	(n/s)	(n/s)	(n/s)	(n/s)	(n/s)	(n/s)
	CATEGORY A	(Ps)	0.49410	-0.51408	0.51558	0.61357	0.42834	0.57059	0.33495	0.46721	0.59731	0.56176
	CATEGORY B	(Ps)	0.19301	-0.15525	0.30089	0.36720	0.21586	0.28794	0.19828	0.31063	0.22740	0.27399

			SELPERF	SUPPERF	NPERCATT	NPERCEVF	PERMCOP	GRNPERF
COMGOAL	WHOLE SAMPLE	(Ps)						
	WHOLE SAMPLE	(Sp)						
	MANAGEMENT	(Ps)						
	CATEGORY A	(Ps)						
	CATEGORY B	(Ps)						
COMSAFE	WHOLE SAMPLE	(Ps)						
	WHOLE SAMPLE	(Sp)						
	MANAGEMENT	(Ps)						
	CATEGORY A	(Ps)						
	CATEGORY B	(Ps)						
COMGWDP	WHOLE SAMPLE	(Ps)						
	WHOLE SAMPLE	(Sp)						
	MANAGEMENT	(Ps)						
	CATEGORY A	(Ps)						
	CATEGORY B	(Ps)						
SELPERF	WHOLE SAMPLE	(Ps)	1.00000					
	WHOLE SAMPLE	(Sp)	1.00000					
	MANAGEMENT	(Ps)	1.00000					
	CATEGORY A	(Ps)	1.00000					
	CATEGORY B	(Ps)	1.00000					
SUPPERF	WHOLE SAMPLE	(Ps)	0.35731	1.00000				
	WHOLE SAMPLE	(Sp)	0.37763	1.00000				
	MANAGEMENT	(Ps)	(n/s)	1.00000				
	CATEGORY A	(Ps)	(n/s)	1.00000				
	CATEGORY B	(Ps)	0.41012	1.00000				
NPERCATT	WHOLE SAMPLE	(Ps)	(n/s)	(n/s)	1.00000			
	WHOLE SAMPLE	(Sp)	(n/s)	(n/s)	1.00000			
	MANAGEMENT	(Ps)	(n/s)	(n/s)	1.00000			
	CATEGORY A	(Ps)	(n/s)	(n/s)	1.00000			
	CATEGORY B	(Ps)	(n/s)	(n/s)	1.00000			
NPERCEVF	WHOLE SAMPLE	(Ps)	0.27436	(n/s)	0.13727	1.00000		
	WHOLE SAMPLE	(Sp)	0.23091	(n/s)	0.10751	1.00000		
	MANAGEMENT	(Ps)	(n/s)	(n/s)	(n/s)	1.00000		
	CATEGORY A	(Ps)	0.48336	(n/s)	(n/s)	1.00000		
	CATEGORY B	(Ps)	0.27208	(n/s)	0.13410	1.00000		
PERMCOP	WHOLE SAMPLE	(Ps)	0.22438	0.10973	0.16411	0.60766	1.00000	
	WHOLE SAMPLE	(Sp)	0.18830	0.10763	0.14692	0.55626	1.00000	
	MANAGEMENT	(Ps)	(n/s)	(n/s)	(n/s)	0.39119	1.00000	
	CATEGORY A	(Ps)	0.43623	(n/s)	0.29340	0.70884	1.00000	
	CATEGORY B	(Ps)	0.21294	0.14662	0.14509	0.60139	1.00000	
GRNPERF	WHOLE SAMPLE	(Ps)	0.90623	0.43543	(n/s)	0.39331	0.35326	1.00000
	WHOLE SAMPLE	(Sp)	0.90322	0.44740	(n/s)	0.33014	0.31409	1.00000
	MANAGEMENT	(Ps)	0.86245	(n/s)	(n/s)	(n/s)	(n/s)	1.00000
	CATEGORY A	(Ps)	0.87211	(n/s)	(n/s)	0.60290	0.58035	1.00000
	CATEGORY B	(Ps)	0.91061	0.47972	(n/s)	0.39177	0.34197	1.00000

		MARR	AGE	LANG	LEVEL	EDUC	SITU	COURSE	YEARS	PFNPAR	FINSAT
MARR	WHOLE SAMPLE (Ps)	1.00000									
	WHOLE SAMPLE (Sp)	1.00000									
	MANAGEMENT (Ps)	1.00000									
	CATEGORY A (Ps)	1.00000									
	CATEGORY B (Ps)	1.00000									
AGE	WHOLE SAMPLE (Ps)	0.37217	1.00000								
	WHOLE SAMPLE (Sp)	0.37879	1.00000								
	MANAGEMENT (Ps)	(n/s)	1.00000								
	CATEGORY A (Ps)	p < 0.10	1.00000								
	CATEGORY B (Ps)	0.42373	1.00000								
LANG	WHOLE SAMPLE (Ps)	(n/s)	(n/s)	1.00000							
	WHOLE SAMPLE (Sp)	(n/s)	(n/s)	1.00000							
	MANAGEMENT (Ps)	(n/s)	(n/s)	1.00000							
	CATEGORY A (Ps)	-0.32392	(n/s)	1.00000							
	CATEGORY B (Ps)	(n/s)	(n/s)	1.00000							
LEVEL	WHOLE SAMPLE (Ps)	p < 0.10	(n/s)	-0.66533	1.00000						
	WHOLE SAMPLE (Sp)	(n/s)	(n/s)	-0.77181	1.00000						
	MANAGEMENT (Ps)	.....	.....	.....	1.00000						
	CATEGORY A (Ps)	.....	.....	.....	1.00000						
	CATEGORY B (Ps)	.....	.....	.....	1.00000						
EDUC	WHOLE SAMPLE (Ps)	(n/s)	p < 0.10	-0.56236	0.75240	1.00000					
	WHOLE SAMPLE (Sp)	(n/s)	p < 0.10	-0.63010	0.77684	1.00000					
	MANAGEMENT (Ps)	(n/s)	-0.34826	(n/s)	.....	1.00000					
	CATEGORY A (Ps)	(n/s)	-0.46332	(n/s)	.....	1.00000					
	CATEGORY B (Ps)	(n/s)	-0.20844	(n/s)	.....	1.00000					
SITU	WHOLE SAMPLE (Ps)	(n/s)	-0.20431	0.16610	-0.37302	-0.28899	1.00000				
	WHOLE SAMPLE (Sp)	(n/s)	-0.19874	0.22226	-0.36006	-0.28841	1.00000				
	MANAGEMENT (Ps)	p < 0.10	(n/s)	(n/s)	.....	(n/s)	1.00000				
	CATEGORY A (Ps)	(n/s)	-0.35311	(n/s)	.....	p < 0.10	1.00000				
	CATEGORY B (Ps)	(n/s)	(n/s)	p < 0.10	.....	(n/s)	1.00000				
COURSE	WHOLE SAMPLE (Ps)	0.13480	0.12832	(n/s)	-0.13025	(n/s)	(n/s)	1.00000			
	WHOLE SAMPLE (Sp)	0.13480	p < 0.10	(n/s)	p < 0.10	(n/s)	(n/s)	1.00000			
	MANAGEMENT (Ps)	(n/s)	(n/s)	(n/s)	.....	(n/s)	(n/s)	1.00000			
	CATEGORY A (Ps)	(n/s)	(n/s)	(n/s)	.....	(n/s)	(n/s)	1.00000			
	CATEGORY B (Ps)	0.19512	0.18485	(n/s)	.....	(n/s)	(n/s)	1.00000			
YEARS	WHOLE SAMPLE (Ps)	0.24916	0.54749	0.15586	(n/s)	-0.22652	(n/s)	0.18033	1.00000		
	WHOLE SAMPLE (Sp)	0.24886	0.52896	0.15284	(n/s)	-0.24346	(n/s)	0.17961	1.00000		
	MANAGEMENT (Ps)	(n/s)	0.37776	(n/s)	.....	-0.34243	(n/s)	(n/s)	1.00000		
	CATEGORY A (Ps)	(n/s)	0.44367	(n/s)	.....	(n/s)	(n/s)	0.35157	1.00000		
	CATEGORY B (Ps)	0.31946	0.61985	(n/s)	.....	-0.20155	(n/s)	0.17551	1.00000		
PFNPAR	WHOLE SAMPLE (Ps)	(n/s)	(n/s)	0.15415	p < 0.10	(n/s)	(n/s)	(n/s)	(n/s)	1.00000	
	WHOLE SAMPLE (Sp)	(n/s)	p < 0.10	0.18475	p < 0.10	-0.14321	(n/s)	(n/s)	(n/s)	1.00000	
	MANAGEMENT (Ps)	(n/s)	(n/s)	(n/s)	.....	0.31184	p < 0.10	(n/s)	-0.34062	1.00000	
	CATEGORY A (Ps)	-0.36072	(n/s)	0.43472	.....	(n/s)	(n/s)	(n/s)	(n/s)	1.00000	
	CATEGORY B (Ps)	p < 0.10	p < 0.10	(n/s)	.....	(n/s)	(n/s)	(n/s)	(n/s)	1.00000	

			MARR	AGE	LANG	LEVEL	EDUC	SITU	COURSE	YEARS	PFNPAR	FINSAT
FINSAT	WHOLE SAMPLE	(Ps)	(n/s)	p < 0.10	0.16759	(n/s)	-0.14335	(n/s)	(n/s)	(n/s)	0.72010	1.00000
	WHOLE SAMPLE	(Sp)	(n/s)	p < 0.10	0.17717	-0.11424	-0.16757	(n/s)	(n/s)	(n/s)	0.70812	1.00000
	MANAGEMENT	(Ps)	(n/s)	(n/s)	(n/s)	.....	p < 0.10	(n/s)	p < 0.10	(n/s)	0.81296	1.00000
	CATEGORY A	(Ps)	(n/s)	0.32616	p < 0.10	.....	(n/s)	p < 0.10	(n/s)	(n/s)	0.66338	1.00000
	CATEGORY B	(Ps)	0.16826	(n/s)	(n/s)	.....	p < 0.10	(n/s)	(n/s)	(n/s)	0.70541	1.00000
PPGOAL	WHOLE SAMPLE	(Ps)	p < 0.10	0.14198	(n/s)	p < 0.10	(n/s)	(n/s)	(n/s)	0.15012	0.42907	0.45642
	WHOLE SAMPLE	(Sp)	(n/s)	0.15660	(n/s)	p < 0.10	(n/s)	p < 0.10	(n/s)	0.16020	0.46910	0.47100
	MANAGEMENT	(Ps)	(n/s)	(n/s)	(n/s)	.....	(n/s)	(n/s)	(n/s)	(n/s)	0.29825	0.35965
	CATEGORY A	(Ps)	(n/s)	(n/s)	(n/s)	.....	0.32220	(n/s)	(n/s)	(n/s)	(n/s)	(n/s)
	CATEGORY B	(Ps)	0.17170	0.20658	0.18521	.....	-0.21538	(n/s)	(n/s)	0.18085	0.55245	0.56935
PPSAFE	WHOLE SAMPLE	(Ps)	0.19959	0.17217	(n/s)	(n/s)	(n/s)	(n/s)	(n/s)	0.17708	0.36191	0.44307
	WHOLE SAMPLE	(Sp)	0.15283	0.16865	(n/s)	(n/s)	(n/s)	(n/s)	(n/s)	0.22686	0.35829	0.43635
	MANAGEMENT	(Ps)	(n/s)	(n/s)	(n/s)	.....	(n/s)	(n/s)	(n/s)	(n/s)	(n/s)	0.39257
	CATEGORY A	(Ps)	(n/s)	(n/s)	(n/s)	.....	(n/s)	-0.36465	(n/s)	0.44309	(n/s)	(n/s)
	CATEGORY B	(Ps)	0.27227	0.19460	(n/s)	.....	-0.20595	(n/s)	(n/s)	0.16928	0.46800	0.52055
PPAGWD	WHOLE SAMPLE	(Ps)	(n/s)	(n/s)	0.13100	(n/s)	(n/s)	(n/s)	(n/s)	(n/s)	0.31192	0.40509
	WHOLE SAMPLE	(Sp)	(n/s)	(n/s)	0.14553	(n/s)	(n/s)	(n/s)	(n/s)	(n/s)	0.32269	0.38626
	MANAGEMENT	(Ps)	(n/s)	(n/s)	(n/s)	.....	(n/s)	(n/s)	(n/s)	(n/s)	(n/s)	0.30181
	CATEGORY A	(Ps)	(n/s)	(n/s)	(n/s)	.....	(n/s)	(n/s)	(n/s)	(n/s)	(n/s)	(n/s)
	CATEGORY B	(Ps)	0.16244	(n/s)	0.17189	.....	-0.17467	p < 0.10	(n/s)	(n/s)	0.37969	0.47864
GWDSAT	WHOLE SAMPLE	(Ps)	(n/s)	0.16232	(n/s)	(n/s)	-0.14450	(n/s)	(n/s)	(n/s)	0.31483	0.47172
	WHOLE SAMPLE	(Sp)	(n/s)	0.15842	(n/s)	(n/s)	-0.14425	(n/s)	(n/s)	(n/s)	0.30421	0.42579
	MANAGEMENT	(Ps)	(n/s)	p < 0.10	(n/s)	.....	(n/s)	(n/s)	(n/s)	(n/s)	(n/s)	0.30430
	CATEGORY A	(Ps)	(n/s)	(n/s)	(n/s)	.....	(n/s)	(n/s)	(n/s)	(n/s)	(n/s)	(n/s)
	CATEGORY B	(Ps)	(n/s)	0.23309	(n/s)	.....	-0.29135	(n/s)	(n/s)	(n/s)	0.38017	0.54612
ATTCOM	WHOLE SAMPLE	(Ps)	(n/s)	(n/s)	p < 0.10	0.28306	0.22281	-0.22831	(n/s)	(n/s)	0.31105	0.41309
	WHOLE SAMPLE	(Sp)	(n/s)	(n/s)	-0.15100	0.26523	0.18823	-0.22447	(n/s)	(n/s)	0.29421	0.37061
	MANAGEMENT	(Ps)	(n/s)	(n/s)	(n/s)	.....	p < 0.10	(n/s)	(n/s)	(n/s)	0.43791	0.52629
	CATEGORY A	(Ps)	(n/s)	(n/s)	0.31657	.....	(n/s)	(n/s)	(n/s)	(n/s)	0.45104	0.42801
	CATEGORY B	(Ps)	(n/s)	(n/s)	(n/s)	.....	(n/s)	(n/s)	(n/s)	0.18644	0.31403	0.45631
JOBSAT	WHOLE SAMPLE	(Ps)	(n/s)	(n/s)	-0.19820	0.28736	0.21772	-0.25299	(n/s)	(n/s)	0.34628	0.40646
	WHOLE SAMPLE	(Sp)	(n/s)	(n/s)	-0.18929	0.26858	0.18304	-0.26974	(n/s)	(n/s)	0.33092	0.38795
	MANAGEMENT	(Ps)	(n/s)	(n/s)	(n/s)	.....	p < 0.10	p < 0.10	(n/s)	(n/s)	0.51415	0.55538
	CATEGORY A	(Ps)	(n/s)	(n/s)	(n/s)	.....	(n/s)	(n/s)	(n/s)	(n/s)	0.42987	p < 0.10
	CATEGORY B	(Ps)	(n/s)	(n/s)	(n/s)	.....	(n/s)	p < 0.10	(n/s)	0.21457	0.36567	0.47264
PRSTAY	WHOLE SAMPLE	(Ps)	(n/s)	p < 0.10	(n/s)	(n/s)	(n/s)	(n/s)	(n/s)	0.13566	0.34735	0.39749
	WHOLE SAMPLE	(Sp)	(n/s)	(n/s)	(n/s)	(n/s)	(n/s)	(n/s)	(n/s)	p < 0.10	0.36183	0.38215
	MANAGEMENT	(Ps)	(n/s)	(n/s)	(n/s)	.....	(n/s)	(n/s)	0.39356	(n/s)	(n/s)	(n/s)
	CATEGORY A	(Ps)	(n/s)	(n/s)	(n/s)	.....	(n/s)	(n/s)	(n/s)	(n/s)	(n/s)	p < 0.10
	CATEGORY B	(Ps)	(n/s)	(n/s)	(n/s)	.....	(n/s)	(n/s)	(n/s)	p < 0.10	0.47112	0.46256
LOCCONT	WHOLE SAMPLE	(Ps)	(n/s)	0.14014	0.17936	-0.21283	-0.31247	(n/s)	(n/s)	0.16229	(n/s)	0.24530
	WHOLE SAMPLE	(Sp)	p < 0.10	0.17132	0.22287	-0.28059	-0.37219	(n/s)	p < 0.10	0.20542	p < 0.10	0.24349
	MANAGEMENT	(Ps)	(n/s)	(n/s)	(n/s)	.....	(n/s)	(n/s)	(n/s)	(n/s)	(n/s)	(n/s)
	CATEGORY A	(Ps)	(n/s)	0.31540	(n/s)	.....	(n/s)	(n/s)	(n/s)	0.42827	(n/s)	(n/s)
	CATEGORY B	(Ps)	(n/s)	p < 0.10	(n/s)	.....	-0.25257	(n/s)	(n/s)	(n/s)	0.19923	0.31674

			MARR	AGE	LANG	LEVEL	EDUC	SITU	COURSE	YEARS	PFNPAR	FINSAT
NEEDIND	WHOLE SAMPLE	(Ps)	(n/s)	(n/s)	p < 0.10	0.22750	0.13276	(n/s)	(n/s)	(n/s)	(n/s)	(n/s)
	WHOLE SAMPLE	(Sp)	(n/s)	(n/s)	-0.16530	0.22134	0.13994	(n/s)	(n/s)	(n/s)	(n/s)	(n/s)
	MANAGEMENT	(Ps)	(n/s)	(n/s)	(n/s)	.....	0.41287	-0.31959	(n/s)	-0.32358	(n/s)	(n/s)
	CATEGORY A	(Ps)	(n/s)	(n/s)	(n/s)	.....	(n/s)	(n/s)	(n/s)	(n/s)	(n/s)	(n/s)
	CATEGORY B	(Ps)	(n/s)	(n/s)	(n/s)	.....	-0.16890	(n/s)	(n/s)	p < 0.10	(n/s)	(n/s)
AUTHORM	WHOLE SAMPLE	(Ps)	(n/s)	(n/s)	(n/s)	(n/s)	(n/s)	(n/s)	(n/s)	(n/s)	(n/s)	(n/s)
	WHOLE SAMPLE	(Sp)	(n/s)	(n/s)	(n/s)	(n/s)	(n/s)	(n/s)	(n/s)	(n/s)	(n/s)	(n/s)
	MANAGEMENT	(Ps)	(n/s)	(n/s)	(n/s)	.....	(n/s)	(n/s)	(n/s)	(n/s)	(n/s)	(n/s)
	CATEGORY A	(Ps)	(n/s)	(n/s)	(n/s)	.....	(n/s)	(n/s)	(n/s)	(n/s)	(n/s)	(n/s)
	CATEGORY B	(Ps)	(n/s)	(n/s)	(n/s)	.....	(n/s)	(n/s)	(n/s)	(n/s)	(n/s)	(n/s)
PERCATT	WHOLE SAMPLE	(Ps)	(n/s)	(n/s)	(n/s)	0.25405	0.22862	-0.26045	(n/s)	(n/s)	0.17935	0.27758
	WHOLE SAMPLE	(Sp)	(n/s)	(n/s)	-0.13964	0.27162	0.21856	-0.28559	(n/s)	(n/s)	0.16150	0.23913
	MANAGEMENT	(Ps)	(n/s)	(n/s)	(n/s)	.....	0.33313	-0.35173	(n/s)	(n/s)	(n/s)	(n/s)
	CATEGORY A	(Ps)	(n/s)	(n/s)	(n/s)	.....	(n/s)	(n/s)	(n/s)	(n/s)	(n/s)	0.39064
	CATEGORY B	(Ps)	(n/s)	(n/s)	0.18229	.....	(n/s)	p < 0.10	(n/s)	p < 0.10	0.23218	(n/s)
PERCDIF	WHOLE SAMPLE	(Ps)	(n/s)	(n/s)	-0.16675	(n/s)	(n/s)	p < 0.10	(n/s)	(n/s)	p < 0.10	-0.20693
	WHOLE SAMPLE	(Sp)	(n/s)	(n/s)	-0.13557	(n/s)	(n/s)	(n/s)	(n/s)	(n/s)	-0.12976	-0.21615
	MANAGEMENT	(Ps)	(n/s)	(n/s)	-0.37548	.....	(n/s)	(n/s)	(n/s)	(n/s)	(n/s)	(n/s)
	CATEGORY A	(Ps)	(n/s)	(n/s)	(n/s)	.....	(n/s)	(n/s)	(n/s)	(n/s)	(n/s)	(n/s)
	CATEGORY B	(Ps)	(n/s)	(n/s)	-0.25731	.....	(n/s)	0.18198	(n/s)	(n/s)	-0.17333	(n/s)
PERCEVF	WHOLE SAMPLE	(Ps)	0.13647	0.13593	(n/s)	(n/s)	(n/s)	(n/s)	(n/s)	(n/s)	0.26950	0.25418
	WHOLE SAMPLE	(Sp)	p < 0.10	p < 0.10	(n/s)	(n/s)	(n/s)	(n/s)	(n/s)	(n/s)	0.27965	0.28138
	MANAGEMENT	(Ps)	(n/s)	(n/s)	(n/s)	.....	0.38046	(n/s)	p < 0.10	(n/s)	p < 0.10	(n/s)
	CATEGORY A	(Ps)	(n/s)	(n/s)	(n/s)	.....	(n/s)	(n/s)	(n/s)	(n/s)	(n/s)	(n/s)
	CATEGORY B	(Ps)	0.18261	0.24940	p < 0.10	.....	p < 0.10	(n/s)	(n/s)	0.19890	0.34963	(n/s)
PERCEVA	WHOLE SAMPLE	(Ps)	(n/s)	(n/s)	(n/s)	(n/s)	(n/s)	(n/s)	p < 0.10	(n/s)	0.37117	0.39915
	WHOLE SAMPLE	(Sp)	(n/s)	0.13654	0.13616	(n/s)	-0.13505	(n/s)	(n/s)	(n/s)	0.39658	0.39564
	MANAGEMENT	(Ps)	(n/s)	p < 0.10	(n/s)	.....	0.48411	(n/s)	(n/s)	(n/s)	0.41042	0.46464
	CATEGORY A	(Ps)	(n/s)	(n/s)	(n/s)	.....	(n/s)	(n/s)	(n/s)	(n/s)	(n/s)	(n/s)
	CATEGORY B	(Ps)	(n/s)	0.22547	(n/s)	.....	-0.22063	(n/s)	(n/s)	(n/s)	0.43287	(n/s)
PEROLAP	WHOLE SAMPLE	(Ps)	(n/s)	(n/s)	(n/s)	(n/s)	(n/s)	(n/s)	(n/s)	(n/s)	(n/s)	0.13936
	WHOLE SAMPLE	(Sp)	(n/s)	(n/s)	(n/s)	(n/s)	(n/s)	(n/s)	(n/s)	(n/s)	(n/s)	p < 0.10
	MANAGEMENT	(Ps)	(n/s)	(n/s)	(n/s)	.....	0.29807	(n/s)	p < 0.10	-0.32626	(n/s)	p < 0.10
	CATEGORY A	(Ps)	(n/s)	(n/s)	(n/s)	.....	(n/s)	(n/s)	(n/s)	(n/s)	(n/s)	(n/s)
	CATEGORY B	(Ps)	(n/s)	(n/s)	(n/s)	.....	(n/s)	0.16086	(n/s)	(n/s)	p < 0.10	(n/s)
PERFEED	WHOLE SAMPLE	(Ps)	0.13633	(n/s)	0.13268	-0.17457	-0.16885	(n/s)	(n/s)	0.18061	0.35235	0.34244
	WHOLE SAMPLE	(Sp)	p < 0.10	(n/s)	0.19115	-0.21935	-0.21210	(n/s)	(n/s)	0.19492	0.38490	0.37222
	MANAGEMENT	(Ps)	(n/s)	(n/s)	(n/s)	.....	0.33686	(n/s)	(n/s)	(n/s)	0.46875	0.37902
	CATEGORY A	(Ps)	(n/s)	(n/s)	(n/s)	.....	(n/s)	(n/s)	(n/s)	(n/s)	(n/s)	(n/s)
	CATEGORY B	(Ps)	0.21519	0.19960	(n/s)	.....	-0.17477	(n/s)	(n/s)	0.23591	0.35214	(n/s)
COMFINP	WHOLE SAMPLE	(Ps)	(n/s)	p < 0.10	(n/s)	(n/s)	(n/s)	(n/s)	(n/s)	0.14164	0.41070	0.50911
	WHOLE SAMPLE	(Sp)	(n/s)	0.12959	(n/s)	(n/s)	(n/s)	(n/s)	(n/s)	0.17127	0.41178	0.50249
	MANAGEMENT	(Ps)	(n/s)	(n/s)	(n/s)	.....	(n/s)	(n/s)	(n/s)	(n/s)	0.40651	0.51122
	CATEGORY A	(Ps)	(n/s)	(n/s)	(n/s)	.....	(n/s)	(n/s)	(n/s)	p < 0.10	(n/s)	0.38055
	CATEGORY B	(Ps)	(n/s)	(n/s)	(n/s)	.....	(n/s)	(n/s)	(n/s)	(n/s)	0.45620	(n/s)

			MARR	AGE	LANG	LEVEL	EDUC	SITU	COURSE	YEARS	PFNPAR	FINSAT
COMGOAL	WHOLE SAMPLE	(Ps)	(n/s)	0.16319	(n/s)	(n/s)	(n/s)	(n/s)	(n/s)	0.21188	0.39584	0.42458
	WHOLE SAMPLE	(Sp)	(n/s)	0.17242	(n/s)	(n/s)	(n/s)	(n/s)	(n/s)	0.22441	0.41386	0.41538
	MANAGEMENT	(Ps)	(n/s)	(n/s)	(n/s)	.....	0.35489	(n/s)	(n/s)	(n/s)	p < 0.10	p < 0.10
	CATEGORY A	(Ps)	(n/s)	(n/s)	(n/s)	.....	(n/s)	(n/s)	(n/s)	0.31771	0.34763	(n/s)
	CATEGORY B	(Ps)	p < 0.10	0.21354	p < 0.10	.....	(n/s)	(n/s)	(n/s)	0.22503	0.45946	0.51276
COMSAFE	WHOLE SAMPLE	(Ps)	p < 0.10	0.18064	(n/s)	0.24449	0.16237	-0.20530	(n/s)	0.16183	0.38941	0.45345
	WHOLE SAMPLE	(Sp)	p < 0.10	0.20305	p < 0.10	0.25467	0.15451	-0.19073	(n/s)	0.18013	0.37370	0.41276
	MANAGEMENT	(Ps)	(n/s)	(n/s)	(n/s)	.....	p < 0.10	(n/s)	(n/s)	(n/s)	(n/s)	(n/s)
	CATEGORY A	(Ps)	(n/s)	p < 0.10	(n/s)	.....	(n/s)	(n/s)	(n/s)	p < 0.10	0.56212	0.36607
	CATEGORY B	(Ps)	(n/s)	p < 0.10	p < 0.10	.....	(n/s)	-0.17392	(n/s)	0.20782	0.47357	0.57118
COMGWDP	WHOLE SAMPLE	(Ps)	(n/s)	0.12474	(n/s)	(n/s)	(n/s)	(n/s)	(n/s)	0.13563	0.35828	0.43556
	WHOLE SAMPLE	(Sp)	(n/s)	0.14276	(n/s)	(n/s)	(n/s)	(n/s)	(n/s)	p < 0.10	0.39648	0.43693
	MANAGEMENT	(Ps)	(n/s)	(n/s)	(n/s)	.....	0.36480	(n/s)	(n/s)	(n/s)	0.38845	0.43718
	CATEGORY A	(Ps)	(n/s)	p < 0.10	(n/s)	.....	(n/s)	(n/s)	(n/s)	(n/s)	(n/s)	0.40345
	CATEGORY B	(Ps)	(n/s)	(n/s)	(n/s)	.....	(n/s)	(n/s)	(n/s)	p < 0.10	0.40244	0.45748
SELPERF	WHOLE SAMPLE	(Ps)	0.12957	(n/s)	-0.30373	0.25499	0.22695	(n/s)	(n/s)	(n/s)	0.17318	0.20905
	WHOLE SAMPLE	(Sp)	p < 0.10	(n/s)	-0.31522	0.27887	0.23690	(n/s)	(n/s)	(n/s)	0.15532	0.18637
	MANAGEMENT	(Ps)	(n/s)	(n/s)	(n/s)	.....	(n/s)	(n/s)	(n/s)	(n/s)	(n/s)	(n/s)
	CATEGORY A	(Ps)	(n/s)	(n/s)	(n/s)	.....	(n/s)	(n/s)	(n/s)	(n/s)	(n/s)	(n/s)
	CATEGORY B	(Ps)	(n/s)	(n/s)	-0.19110	.....	(n/s)	(n/s)	(n/s)	(n/s)	0.27441	0.28781
SUPPERF	WHOLE SAMPLE	(Ps)	.....	.....	.....	.....	.....	.....	.....	.....	.....	.....
	WHOLE SAMPLE	(Sp)	.....	.....	.....	.....	.....	.....	.....	.....	.....	.....
	MANAGEMENT	(Ps)	.....	.....	.....	.....	.....	.....	.....	.....	.....	.....
	CATEGORY A	(Ps)	.....	.....	.....	.....	.....	.....	.....	.....	.....	.....
	CATEGORY B	(Ps)	.....	.....	.....	.....	.....	.....	.....	.....	.....	.....
NPERCATT	WHOLE SAMPLE	(Ps)	(n/s)	(n/s)	-0.20757	0.27873	0.23625	-0.17051	(n/s)	(n/s)	(n/s)	p < 0.10
	WHOLE SAMPLE	(Sp)	(n/s)	(n/s)	-0.20755	0.28561	0.22672	-0.18218	(n/s)	(n/s)	(n/s)	(n/s)
	MANAGEMENT	(Ps)	(n/s)	0.32091	(n/s)	.....	0.39786	-0.36253	(n/s)	(n/s)	p < 0.10	(n/s)
	CATEGORY A	(Ps)	(n/s)	(n/s)	(n/s)	.....	(n/s)	(n/s)	(n/s)	(n/s)	(n/s)	(n/s)
	CATEGORY B	(Ps)	(n/s)	(n/s)	(n/s)	.....	(n/s)	(n/s)	(n/s)	(n/s)	(n/s)	p < 0.10
NPERCEVF	WHOLE SAMPLE	(Ps)	p < 0.10	0.13059	(n/s)	(n/s)	(n/s)	(n/s)	(n/s)	(n/s)	0.36824	0.37826
	WHOLE SAMPLE	(Sp)	(n/s)	0.13125	(n/s)	(n/s)	(n/s)	(n/s)	(n/s)	(n/s)	0.38694	0.38442
	MANAGEMENT	(Ps)	(n/s)	(n/s)	(n/s)	.....	0.48021	(n/s)	(n/s)	(n/s)	0.37728	0.37814
	CATEGORY A	(Ps)	(n/s)	(n/s)	(n/s)	.....	(n/s)	(n/s)	(n/s)	(n/s)	(n/s)	(n/s)
	CATEGORY B	(Ps)	0.17603	0.26844	0.16083	.....	-0.21164	(n/s)	(n/s)	0.17831	0.45286	0.48376
PERMCOP	WHOLE SAMPLE	(Ps)	(n/s)	0.18058	(n/s)	p < 0.10	(n/s)	-0.12783	(n/s)	0.20355	0.47040	0.54611
	WHOLE SAMPLE	(Sp)	(n/s)	0.20641	(n/s)	(n/s)	(n/s)	(n/s)	(n/s)	0.22617	0.49650	0.53865
	MANAGEMENT	(Ps)	(n/s)	(n/s)	(n/s)	.....	0.33181	(n/s)	(n/s)	(n/s)	0.37261	0.41702
	CATEGORY A	(Ps)	(n/s)	(n/s)	(n/s)	.....	(n/s)	(n/s)	(n/s)	0.35924	0.45824	0.40522
	CATEGORY B	(Ps)	(n/s)	0.17570	(n/s)	.....	(n/s)	(n/s)	(n/s)	0.22227	0.53788	0.62172
GRNPERF	WHOLE SAMPLE	(Ps)	(n/s)	(n/s)	-0.22109	0.22046	0.16426	(n/s)	(n/s)	(n/s)	0.29642	0.34855
	WHOLE SAMPLE	(Sp)	(n/s)	(n/s)	-0.22118	0.21893	0.16292	(n/s)	(n/s)	(n/s)	0.29997	0.33356
	MANAGEMENT	(Ps)	(n/s)	(n/s)	(n/s)	.....	(n/s)	(n/s)	p < 0.10	(n/s)	(n/s)	(n/s)
	CATEGORY A	(Ps)	(n/s)	(n/s)	p < 0.10	.....	(n/s)	(n/s)	(n/s)	(n/s)	(n/s)	p < 0.10
	CATEGORY B	(Ps)	(n/s)	(n/s)	(n/s)	.....	(n/s)	(n/s)	(n/s)	(n/s)	0.44288	0.45126

		PPGOAL	PPSAFE	PPAGWD	GWDSAT	ATTCOM	JOBSAT	PRSTAY	LOCCONT	NEEDIND	AUTHORM
FINSAT	WHOLE SAMPLE (Ps)										
	WHOLE SAMPLE (Sp)										
	MANAGEMENT (Ps)										
	CATEGORY A (Ps)										
	CATEGORY B (Ps)										
PPGOAL	WHOLE SAMPLE (Ps)	1.00000									
	WHOLE SAMPLE (Sp)	1.00000									
	MANAGEMENT (Ps)	1.00000									
	CATEGORY A (Ps)	1.00000									
	CATEGORY B (Ps)	1.00000									
PPSAFE	WHOLE SAMPLE (Ps)	0.60979	1.00000								
	WHOLE SAMPLE (Sp)	0.57520	1.00000								
	MANAGEMENT (Ps)	0.54331	1.00000								
	CATEGORY A (Ps)	0.54592	1.00000								
	CATEGORY B (Ps)	0.65212	1.00000								
PPAGWD	WHOLE SAMPLE (Ps)	0.54083	0.53203	1.00000							
	WHOLE SAMPLE (Sp)	0.50028	0.48533	1.00000							
	MANAGEMENT (Ps)	0.54959	0.47923	1.00000							
	CATEGORY A (Ps)	0.60884	0.51975	1.00000							
	CATEGORY B (Ps)	0.56564	0.54645	1.00000							
GWDSAT	WHOLE SAMPLE (Ps)	0.55191	0.48176	0.53189	1.00000						
	WHOLE SAMPLE (Sp)	0.50461	0.41421	0.45625	1.00000						
	MANAGEMENT (Ps)	0.36327	p < 0.10	0.54267	1.00000						
	CATEGORY A (Ps)	0.43762	(n/s)	0.53704	1.00000						
	CATEGORY B (Ps)	0.59543	0.54248	0.55177	1.00000						
ATTCOM	WHOLE SAMPLE (Ps)	0.46091	0.40960	0.41046	0.27891	1.00000					
	WHOLE SAMPLE (Sp)	0.44501	0.40497	0.40131	0.25177	1.00000					
	MANAGEMENT (Ps)	0.55024	0.36097	0.59710	0.33010	1.00000					
	CATEGORY A (Ps)	0.49924	0.63392	0.53970	0.38336	1.00000					
	CATEGORY B (Ps)	0.43333	0.39494	0.38000	0.27867	1.00000					
JOBSAT	WHOLE SAMPLE (Ps)	0.40203	0.33140	0.33753	0.40876	0.50096	1.00000				
	WHOLE SAMPLE (Sp)	0.44111	0.34183	0.35779	0.37611	0.49554	1.00000				
	MANAGEMENT (Ps)	0.62775	0.47099	0.53402	0.34360	0.62631	1.00000				
	CATEGORY A (Ps)	0.37315	0.32666	0.50776	0.43846	0.60461	1.00000				
	CATEGORY B (Ps)	0.37375	0.30129	0.29200	0.44637	0.38892	1.00000				
PRSTAY	WHOLE SAMPLE (Ps)	0.36404	0.27966	0.25514	0.29668	0.33345	0.35928	1.00000			
	WHOLE SAMPLE (Sp)	0.37173	0.25241	0.26714	0.24747	0.35736	0.44622	1.00000			
	MANAGEMENT (Ps)	0.35563	(n/s)	0.30131	(n/s)	0.40323	0.58172	1.00000			
	CATEGORY A (Ps)	(n/s)	(n/s)	(n/s)	(n/s)	(n/s)	(n/s)	1.00000			
	CATEGORY B (Ps)	0.44206	0.36089	0.34301	0.37464	0.37747	0.38103	1.00000			
LOCCONT	WHOLE SAMPLE (Ps)	0.23283	0.20033	0.24918	0.31322	(n/s)	(n/s)	(n/s)	1.00000		
	WHOLE SAMPLE (Sp)	0.18946	0.20142	0.23584	0.30089	(n/s)	(n/s)	(n/s)	1.00000		
	MANAGEMENT (Ps)	(n/s)	(n/s)	(n/s)	(n/s)	(n/s)	p < 0.10	(n/s)	1.00000		
	CATEGORY A (Ps)	(n/s)	(n/s)	(n/s)	(n/s)	(n/s)	(n/s)	(n/s)	1.00000		
	CATEGORY B (Ps)	0.35518	0.31768	0.35969	0.38146	p < 0.10	0.16710	p < 0.10	1.00000		

			PPGOAL	PPSAFE	PPAGWD	GWDSAT	ATTCOM	JOBSAT	PRSTAY	LOCCONT	NEEDIND	AUTHORM
NEEDIND	WHOLE SAMPLE	(Ps)	p < 0.10	(n/s)	(n/s)	p < 0.10	(n/s)	(n/s)	(n/s)	(n/s)	1.00000	
	WHOLE SAMPLE	(Sp)	0.15298	(n/s)	(n/s)	(n/s)	(n/s)	0.13177	(n/s)	(n/s)	1.00000	
	MANAGEMENT	(Ps)	(n/s)	p < 0.10	(n/s)	(n/s)	(n/s)	(n/s)	(n/s)	(n/s)	1.00000	
	CATEGORY A	(Ps)	p < 0.10	-0.45302	(n/s)	(n/s)	-0.47334	(n/s)	(n/s)	-0.32599	1.00000	
	CATEGORY B	(Ps)	0.16182	0.18360	(n/s)	p < 0.10	(n/s)	(n/s)	p < 0.10	(n/s)	1.00000	
AUTHORM	WHOLE SAMPLE	(Ps)	(n/s)	0.14284	0.15396	(n/s)	0.14432	p < 0.10	(n/s)	0.15209	(n/s)	1.00000
	WHOLE SAMPLE	(Sp)	(n/s)	0.20051	0.16906	(n/s)	0.18126	0.15547	p < 0.10	p < 0.10	(n/s)	1.00000
	MANAGEMENT	(Ps)	-0.32501	(n/s)	(n/s)	(n/s)	(n/s)	(n/s)	(n/s)	(n/s)	(n/s)	1.00000
	CATEGORY A	(Ps)	(n/s)	(n/s)	(n/s)	(n/s)	(n/s)	0.36822	(n/s)	(n/s)	(n/s)	1.00000
	CATEGORY B	(Ps)	(n/s)	0.22024	0.25735	(n/s)	0.19282	(n/s)	(n/s)	0.27511	p < 0.10	1.00000
PERCATT	WHOLE SAMPLE	(Ps)	0.14938	0.233371	0.15469	(n/s)	0.46868	0.30303	0.28912	(n/s)	(n/s)	0.16584
	WHOLE SAMPLE	(Sp)	0.13548	0.17313	0.13284	(n/s)	0.40452	0.29056	0.22151	(n/s)	(n/s)	0.17596
	MANAGEMENT	(Ps)	(n/s)	(n/s)	(n/s)	(n/s)	0.36277	0.31917	(n/s)	(n/s)	(n/s)	(n/s)
	CATEGORY A	(Ps)	(n/s)	(n/s)	(n/s)	(n/s)	p < 0.10	(n/s)	0.32923	(n/s)	p < 0.10	p < 0.10
	CATEGORY B	(Ps)	p < 0.10	0.27136	0.18245	(n/s)	0.46556	0.23344	0.36063	(n/s)	(n/s)	0.16338
PERCDIF	WHOLE SAMPLE	(Ps)	(n/s)	(n/s)	(n/s)	(n/s)	(n/s)	(n/s)	-0.17345	p < 0.10	(n/s)	(n/s)
	WHOLE SAMPLE	(Sp)	p < 0.10	(n/s)	-0.16420	(n/s)	-0.15670	-0.15794	-0.18225	p < 0.10	(n/s)	(n/s)
	MANAGEMENT	(Ps)	0.50764	0.30885	(n/s)	(n/s)	(n/s)	(n/s)	(n/s)	(n/s)	(n/s)	(n/s)
	CATEGORY A	(Ps)	(n/s)	(n/s)	(n/s)	(n/s)	(n/s)	(n/s)	-0.45795	(n/s)	(n/s)	(n/s)
	CATEGORY B	(Ps)	-0.16262	(n/s)	p < 0.10	(n/s)	-0.16792	(n/s)	p < 0.10	(n/s)	(n/s)	(n/s)
PERCEVF	WHOLE SAMPLE	(Ps)	0.40938	0.37027	0.31358	0.35684	0.35923	0.45316	0.15875	(n/s)	(n/s)	(n/s)
	WHOLE SAMPLE	(Sp)	0.39140	0.34675	0.27122	0.28930	0.35879	0.45315	0.19340	(n/s)	(n/s)	(n/s)
	MANAGEMENT	(Ps)	0.63969	p < 0.10	0.40250	(n/s)	0.37734	0.55186	(n/s)	(n/s)	(n/s)	(n/s)
	CATEGORY A	(Ps)	0.40666	(n/s)	0.34352	0.33604	p < 0.10	0.38170	(n/s)	(n/s)	(n/s)	(n/s)
	CATEGORY B	(Ps)	0.39175	0.41398	0.28134	0.39994	0.36332	0.42950	0.28179	(n/s)	(n/s)	(n/s)
PERCEVA	WHOLE SAMPLE	(Ps)	0.43943	0.49610	0.43525	0.42066	0.33636	0.42070	0.37792	0.19058	0.17498	p < 0.10
	WHOLE SAMPLE	(Sp)	0.42672	0.45105	0.40147	0.37507	0.34185	0.39969	0.37732	0.20477	p < 0.10	p < 0.10
	MANAGEMENT	(Ps)	0.65135	0.38264	0.50672	p < 0.10	0.61384	0.64795	0.36865	(n/s)	(n/s)	(n/s)
	CATEGORY A	(Ps)	0.36034	(n/s)	(n/s)	0.39306	(n/s)	(n/s)	(n/s)	(n/s)	-0.34961	(n/s)
	CATEGORY B	(Ps)	0.46319	0.54736	0.43660	0.45862	0.33305	0.42892	0.47671	0.27133	0.27449	(n/s)
PEROLAP	WHOLE SAMPLE	(Ps)	0.21923	0.25254	0.28927	0.23668	0.25643	0.26448	0.19555	(n/s)	(n/s)	(n/s)
	WHOLE SAMPLE	(Sp)	0.22894	0.24321	0.26319	0.17640	0.32015	0.27727	0.21883	(n/s)	p < 0.10	(n/s)
	MANAGEMENT	(Ps)	0.36057	(n/s)	0.47252	0.40783	0.45976	0.34925	(n/s)	(n/s)	(n/s)	(n/s)
	CATEGORY A	(Ps)	0.31212	p < 0.10	0.34810	(n/s)	p < 0.10	(n/s)	(n/s)	(n/s)	(n/s)	(n/s)
	CATEGORY B	(Ps)	0.17179	0.27960	0.24014	0.24586	0.21295	0.31238	0.28607	(n/s)	(n/s)	(n/s)
PERFEED	WHOLE SAMPLE	(Ps)	0.44245	0.41761	0.43011	0.33761	0.27588	0.28847	0.26047	0.18924	(n/s)	(n/s)
	WHOLE SAMPLE	(Sp)	0.44431	0.42699	0.41670	0.34865	0.29227	0.30096	0.28958	0.23934	(n/s)	0.17622
	MANAGEMENT	(Ps)	0.36501	(n/s)	0.38329	p < 0.10	0.43530	0.62707	0.31198	(n/s)	(n/s)	(n/s)
	CATEGORY A	(Ps)	0.51988	0.31492	(n/s)	(n/s)	p < 0.10	(n/s)	(n/s)	(n/s)	-0.32772	(n/s)
	CATEGORY B	(Ps)	0.48900	0.50885	0.49359	0.40040	0.33690	0.34609	0.33356	0.21107	(n/s)	0.19626
COMFINP	WHOLE SAMPLE	(Ps)	0.42842	0.44683	0.31398	0.39803	0.42473	0.42550	0.33350	0.19361	0.17483	0.22491
	WHOLE SAMPLE	(Sp)	0.40350	0.48376	0.31447	0.34766	0.37273	0.42127	0.33643	0.21398	0.14706	0.23178
	MANAGEMENT	(Ps)	0.41124	0.45942	(n/s)	p < 0.10	0.52340	0.51197	0.33925	(n/s)	(n/s)	(n/s)
	CATEGORY A	(Ps)	(n/s)	(n/s)	(n/s)	(n/s)	(n/s)	(n/s)	(n/s)	(n/s)	(n/s)	(n/s)
	CATEGORY B	(Ps)	0.48204	0.47289	0.36873	0.46959	0.46894	0.47697	0.38907	0.27261	0.28102	0.30083

			PPGOAL	PPSAFE	PPAGWD	GWDSAT	ATTCOM	JOBSAT	PRSTAY	LOCCONT	NEEDIND	AUTHORM
COMGOAL	WHOLE SAMPLE	(Ps)	0.63117	0.48802	0.40075	0.40742	0.44400	0.42894	0.31925	0.15460	(n/s)	(n/s)
	WHOLE SAMPLE	(Sp)	0.60445	0.47959	0.37348	0.33464	0.40383	0.41308	0.33321	0.14370	(n/s)	p < 0.10
	MANAGEMENT	(Ps)	0.59193	0.30158	0.42312	(n/s)	0.47865	0.55627	0.30076	(n/s)	(n/s)	(n/s)
	CATEGORY A	(Ps)	0.64220	0.44567	0.32154	(n/s)	0.51080	p < 0.10	(n/s)	(n/s)	-0.47467	(n/s)
	CATEGORY B	(Ps)	0.62845	0.54747	0.43812	0.47269	0.43787	0.45216	0.36202	0.20006	0.20468	0.16351
COMSAFE	WHOLE SAMPLE	(Ps)	0.48829	0.46979	0.35289	0.37084	0.52798	0.49352	0.33013	(n/s)	(n/s)	(n/s)
	WHOLE SAMPLE	(Sp)	0.45712	0.47429	0.33934	0.27881	0.51910	0.46863	0.32040	(n/s)	(n/s)	p < 0.10
	MANAGEMENT	(Ps)	0.53440	(n/s)	p < 0.10	(n/s)	0.54668	0.38102	(n/s)	(n/s)	(n/s)	(n/s)
	CATEGORY A	(Ps)	p < 0.10	0.43805	(n/s)	(n/s)	0.55680	0.36149	p < 0.10	(n/s)	p < 0.10	(n/s)
	CATEGORY B	(Ps)	0.51761	0.52798	0.42824	0.44269	0.47851	0.48624	0.39252	0.20152	(n/s)	p < 0.10
COMGWDP	WHOLE SAMPLE	(Ps)	0.52926	0.42338	0.30549	0.32032	0.52402	0.39860	0.29102	p < 0.10	(n/s)	(n/s)
	WHOLE SAMPLE	(Sp)	0.53106	0.44466	0.30018	0.31196	0.46724	0.35711	0.29884	0.16706	(n/s)	(n/s)
	MANAGEMENT	(Ps)	0.61734	0.37588	0.51183	p < 0.10	0.68143	0.56210	(n/s)	(n/s)	(n/s)	(n/s)
	CATEGORY A	(Ps)	0.41883	0.41261	p < 0.10	(n/s)	0.43428	p < 0.10	p < 0.10	(n/s)	-0.49276	(n/s)
	CATEGORY B	(Ps)	0.53393	0.45360	0.28462	0.34737	0.51260	0.39967	0.28789	(n/s)	0.17451	p < 0.10
SELPERF	WHOLE SAMPLE	(Ps)	0.16962	0.22441	0.21937	0.14980	0.16864	0.23666	p < 0.10	(n/s)	(n/s)	(n/s)
	WHOLE SAMPLE	(Sp)	0.17560	0.22896	0.20560	0.15192	0.15656	0.19082	(n/s)	(n/s)	(n/s)	(n/s)
	MANAGEMENT	(Ps)	(n/s)	(n/s)	p < 0.10	(n/s)	0.39803	0.41583	0.41021	(n/s)	(n/s)	0.35276
	CATEGORY A	(Ps)	(n/s)	(n/s)	(n/s)	(n/s)	p < 0.10	0.32132	0.38340	(n/s)	(n/s)	(n/s)
	CATEGORY B	(Ps)	0.16300	0.23406	0.23639	0.16973	(n/s)	(n/s)	(n/s)	(n/s)	(n/s)	(n/s)
SUPPERF	WHOLE SAMPLE	(Ps)	.....	.....	.....	.....	.....	.....	.....	.....	.....	.....
	WHOLE SAMPLE	(Sp)	.....	.....	.....	.....	.....	.....	.....	.....	.....	.....
	MANAGEMENT	(Ps)	.....	.....	.....	.....	.....	.....	.....	.....	.....	.....
	CATEGORY A	(Ps)	.....	.....	.....	.....	.....	.....	.....	.....	.....	.....
	CATEGORY B	(Ps)	.....	.....	.....	.....	.....	.....	.....	.....	.....	.....
NPERCATT	WHOLE SAMPLE	(Ps)	(n/s)	0.18837	(n/s)	(n/s)	0.37897	0.24555	0.15138	-0.14406	(n/s)	(n/s)
	WHOLE SAMPLE	(Sp)	(n/s)	p < 0.10	(n/s)	p < 0.10	0.27907	0.18783	(n/s)	-0.16565	(n/s)	(n/s)
	MANAGEMENT	(Ps)	0.45942	p < 0.10	p < 0.10	(n/s)	0.42892	0.36885	(n/s)	(n/s)	p < 0.10	(n/s)
	CATEGORY A	(Ps)	(n/s)	(n/s)	(n/s)	(n/s)	(n/s)	(n/s)	(n/s)	(n/s)	(n/s)	(n/s)
	CATEGORY B	(Ps)	(n/s)	0.17702	(n/s)	(n/s)	0.32163	p < 0.10	0.22868	(n/s)	(n/s)	(n/s)
NPERCEVF	WHOLE SAMPLE	(Ps)	0.48090	0.49719	0.43060	0.44291	0.39093	0.49087	0.31739	0.12941	0.15384	(n/s)
	WHOLE SAMPLE	(Sp)	0.46337	0.46058	0.37843	0.36954	0.39176	0.47494	0.33380	p < 0.10	0.12976	(n/s)
	MANAGEMENT	(Ps)	0.71296	0.37470	0.50487	p < 0.10	0.55392	0.66504	(n/s)	(n/s)	(n/s)	(n/s)
	CATEGORY A	(Ps)	0.41438	(n/s)	0.31919	0.39448	(n/s)	0.34672	(n/s)	(n/s)	p < 0.10	(n/s)
	CATEGORY B	(Ps)	0.49311	0.55902	0.42226	0.49407	0.39407	0.48891	0.44876	0.21484	0.22939	(n/s)
PERMCOP	WHOLE SAMPLE	(Ps)	0.64866	0.55772	0.42366	0.45518	0.58240	0.52800	0.38494	0.16964	p < 0.10	p < 0.10
	WHOLE SAMPLE	(Sp)	0.63391	0.58640	0.41714	0.39770	0.53308	0.50370	0.39271	0.18826	p < 0.10	0.15728
	MANAGEMENT	(Ps)	0.64250	0.38344	0.44087	(n/s)	0.64897	0.60063	0.30846	(n/s)	(n/s)	(n/s)
	CATEGORY A	(Ps)	0.55200	0.51580	p < 0.10	(n/s)	0.56371	0.34186	(n/s)	(n/s)	-0.52331	(n/s)
	CATEGORY B	(Ps)	0.66176	0.60663	0.46171	0.52180	0.56599	0.54255	0.42756	0.23769	0.22889	0.21895
GRNPERF	WHOLE SAMPLE	(Ps)	0.30045	0.31168	0.29693	0.25480	0.28661	0.35604	0.52036	(n/s)	(n/s)	p < 0.10
	WHOLE SAMPLE	(Sp)	0.29847	0.28545	0.26739	0.23360	0.26726	0.32447	0.45424	(n/s)	(n/s)	p < 0.10
	MANAGEMENT	(Ps)	0.30145	(n/s)	0.32377	(n/s)	0.46995	0.56116	0.73999	(n/s)	(n/s)	0.30905
	CATEGORY A	(Ps)	(n/s)	(n/s)	(n/s)	(n/s)	p < 0.10	0.35251	0.75419	(n/s)	(n/s)	(n/s)
	CATEGORY B	(Ps)	0.33115	0.36058	0.35515	0.30887	0.17757	0.26056	0.45022	(n/s)	(n/s)	(n/s)

		PERCATT	PERCDIF	PERCEVF	PERCEVA	PEROLAP	PERFEED	COMFINP	COMGOAL	COMSAFE	COMGWDP
NEEDIND	WHOLE SAMPLE (Ps)										
	WHOLE SAMPLE (Sp)										
	MANAGEMENT (Ps)										
	CATEGORY A (Ps)										
	CATEGORY B (Ps)										
AUTHORM	WHOLE SAMPLE (Ps)										
	WHOLE SAMPLE (Sp)										
	MANAGEMENT (Ps)										
	CATEGORY A (Ps)										
	CATEGORY B (Ps)										
PERCATT	WHOLE SAMPLE (Ps)	1.00000									
	WHOLE SAMPLE (Sp)	1.00000									
	MANAGEMENT (Ps)	1.00000									
	CATEGORY A (Ps)	1.00000									
	CATEGORY B (Ps)	1.00000									
PERCDIF	WHOLE SAMPLE (Ps)	-0.34614	1.00000								
	WHOLE SAMPLE (Sp)	-0.34200	1.00000								
	MANAGEMENT (Ps)	(n/s)	1.00000								
	CATEGORY A (Ps)	-0.40940	1.00000								
	CATEGORY B (Ps)	-0.38998	1.00000								
PERCEVF	WHOLE SAMPLE (Ps)	0.27312	(n/s)	1.00000							
	WHOLE SAMPLE (Sp)	0.24322	(n/s)	1.00000							
	MANAGEMENT (Ps)	(n/s)	0.41071	1.00000							
	CATEGORY A (Ps)	(n/s)	(n/s)	1.00000							
	CATEGORY B (Ps)	0.30863	p < 0.10	1.00000							
PERCEVA	WHOLE SAMPLE (Ps)	0.22820	(n/s)	0.56467	1.00000						
	WHOLE SAMPLE (Sp)	0.21166	p < 0.10	0.55887	1.00000						
	MANAGEMENT (Ps)	p < 0.10	p < 0.10	0.64008	1.00000						
	CATEGORY A (Ps)	(n/s)	(n/s)	0.71076	1.00000						
	CATEGORY B (Ps)	0.25954	(n/s)	0.53041	1.00000						
PEROLAP	WHOLE SAMPLE (Ps)	0.16933	(n/s)	0.27368	0.30591	1.00000					
	WHOLE SAMPLE (Sp)	0.16876	(n/s)	0.28696	0.30252	1.00000					
	MANAGEMENT (Ps)	(n/s)	0.29742	0.41175	0.59752	1.00000					
	CATEGORY A (Ps)	(n/s)	(n/s)	0.37623	p < 0.10	1.00000					
	CATEGORY B (Ps)	0.23173	(n/s)	0.22129	0.25558	1.00000					
PERFEED	WHOLE SAMPLE (Ps)	(n/s)	(n/s)	0.49529	0.58763	0.32119	1.00000				
	WHOLE SAMPLE (Sp)	(n/s)	(n/s)	0.45427	0.55431	0.28231	1.00000				
	MANAGEMENT (Ps)	(n/s)	(n/s)	0.48060	0.59055	0.52464	1.00000				
	CATEGORY A (Ps)	(n/s)	(n/s)	0.60171	0.48206	(n/s)	1.00000				
	CATEGORY B (Ps)	0.16540	(n/s)	0.52511	0.62665	0.29439	1.00000				
COMFINP	WHOLE SAMPLE (Ps)	0.20638	(n/s)	0.33963	0.44090	(n/s)	0.35904	1.00000			
	WHOLE SAMPLE (Sp)	0.15183	p < 0.10	0.36393	0.43219	p < 0.10	0.40008	1.00000			
	MANAGEMENT (Ps)	p < 0.10	(n/s)	0.30371	0.44480	(n/s)	0.34017	1.00000			
	CATEGORY A (Ps)	(n/s)	(n/s)	(n/s)	(n/s)	(n/s)	(n/s)	1.00000			
	CATEGORY B (Ps)	0.23641	p < 0.10	0.39610	0.47813	p < 0.10	0.42041	1.00000			

			PERCATT	PERCDIF	PERCEVF	PERCEVA	PEROLAP	PERFEED	COMFINP	COMGOAL	COMSAFE	COMGWDP
COMGOAL	WHOLE SAMPLE	(Ps)	0.27762	-0.15552	0.51582	0.50392	0.23280	0.55411	0.54108	1.00000		
	WHOLE SAMPLE	(Sp)	0.21142	-0.16555	0.49785	0.49351	0.25526	0.55360	0.54646	1.00000		
	MANAGEMENT	(Ps)	(n/s)	0.39577	0.60385	0.67682	0.35384	0.71761	0.50933	1.00000		
	CATEGORY A	(Ps)	(n/s)	(n/s)	0.56457	0.45375	p < 0.10	0.76092	0.35314	1.00000		
	CATEGORY B	(Ps)	0.33853	-0.26727	0.51873	0.51785	0.19207	0.50718	0.58442	1.00000		
COMSAFE	WHOLE SAMPLE	(Ps)	0.35786	-0.13756	0.44226	0.44269	0.15443	0.27302	0.52675	0.56219	1.00000	
	WHOLE SAMPLE	(Sp)	0.33371	-0.15774	0.43884	0.42387	0.22038	0.27617	0.51829	0.51125	1.00000	
	MANAGEMENT	(Ps)	p < 0.10	p < 0.10	0.55322	0.49417	(n/s)	0.30827	0.60588	0.71110	1.00000	
	CATEGORY A	(Ps)	(n/s)	(n/s)	(n/s)	(n/s)	(n/s)	(n/s)	p < 0.10	0.37724	1.00000	
	CATEGORY B	(Ps)	0.33556	-0.20130	0.50428	0.51720	0.20210	0.38278	0.56497	0.59826	1.00000	
COMGWDP	WHOLE SAMPLE	(Ps)	0.26725	p < 0.10	0.39168	0.38642	0.18802	0.42737	0.53590	0.63600	0.54688	1.00000
	WHOLE SAMPLE	(Sp)	0.20381	-0.14879	0.39698	0.42874	0.21595	0.45827	0.52533	0.63702	0.48850	1.00000
	MANAGEMENT	(Ps)	p < 0.10	(n/s)	0.61643	0.72632	0.43516	0.59341	0.60590	0.71570	0.69621	1.00000
	CATEGORY A	(Ps)	(n/s)	(n/s)	0.40599	0.33549	(n/s)	0.44718	0.38507	0.63158	0.41813	1.00000
	CATEGORY B	(Ps)	0.28936	-0.22192	0.34566	0.35671	p < 0.10	0.41032	0.56451	0.61416	0.56895	1.00000
SELPERF	WHOLE SAMPLE	(Ps)	(n/s)	(n/s)	(n/s)	0.24666	(n/s)	0.17348	0.23377	0.17824	0.26229	0.19220
	WHOLE SAMPLE	(Sp)	(n/s)	(n/s)	(n/s)	0.18647	(n/s)	p < 0.10	0.21735	0.13521	0.23975	0.16762
	MANAGEMENT	(Ps)	p < 0.10	(n/s)	p < 0.10	0.38978	(n/s)	(n/s)	0.41223	(n/s)	p < 0.10	p < 0.10
	CATEGORY A	(Ps)	(n/s)	(n/s)	(n/s)	(n/s)	(n/s)	(n/s)	(n/s)	(n/s)	p < 0.10	(n/s)
	CATEGORY B	(Ps)	(n/s)	(n/s)	(n/s)	0.26272	(n/s)	0.25740	0.22588	0.16149	0.19309	0.17780
SUPPERF	WHOLE SAMPLE	(Ps)	.....	.....	.....	.....	.....	.....	.....	.....	.....	.....
	WHOLE SAMPLE	(Sp)	.....	.....	.....	.....	.....	.....	.....	.....	.....	.....
	MANAGEMENT	(Ps)	.....	.....	.....	.....	.....	.....	.....	.....	.....	.....
	CATEGORY A	(Ps)	.....	.....	.....	.....	.....	.....	.....	.....	.....	.....
	CATEGORY B	(Ps)	.....	.....	.....	.....	.....	.....	.....	.....	.....	.....
NPERCATT	WHOLE SAMPLE	(Ps)	0.71319	0.41077	0.23343	0.17341	0.16106	(n/s)	p < 0.10	0.15360	0.24500	0.16821
	WHOLE SAMPLE	(Sp)	0.69878	0.35743	0.16761	(n/s)	p < 0.10	(n/s)	(n/s)	(n/s)	0.23999	(n/s)
	MANAGEMENT	(Ps)	0.78341	0.49202	0.46711	0.41968	(n/s)	(n/s)	p < 0.10	0.42672	0.43552	0.37829
	CATEGORY A	(Ps)	0.78273	(n/s)	(n/s)	(n/s)	(n/s)	(n/s)	(n/s)	(n/s)	(n/s)	(n/s)
	CATEGORY B	(Ps)	0.66714	0.42578	0.18315	0.17048	0.17883	(n/s)	(n/s)	(n/s)	0.16688	(n/s)
NPERCEVF	WHOLE SAMPLE	(Ps)	0.27985	(n/s)	0.85379	0.91178	0.32915	0.61714	0.44712	0.57454	0.49932	0.43866
	WHOLE SAMPLE	(Sp)	0.24322	(n/s)	0.85391	0.89491	0.33828	0.57955	0.45866	0.56836	0.48176	0.46091
	MANAGEMENT	(Ps)	p < 0.10	0.37619	0.89492	0.91566	0.56244	0.59442	0.41723	0.70901	0.57644	0.74434
	CATEGORY A	(Ps)	(n/s)	(n/s)	0.92322	0.92650	0.37075	0.58522	(n/s)	0.54989	(n/s)	0.40045
	CATEGORY B	(Ps)	0.31943	p < 0.10	0.83148	0.91199	0.27457	0.66476	0.50500	0.59037	0.58295	0.40102
PERMCOP	WHOLE SAMPLE	(Ps)	0.33923	-0.16125	0.52672	0.54376	0.21516	0.51145	0.75682	0.87510	0.78886	0.83838
	WHOLE SAMPLE	(Sp)	0.27009	-0.16937	0.52844	0.55178	0.23927	0.55125	0.74974	0.87006	0.73399	0.82995
	MANAGEMENT	(Ps)	p < 0.10	0.30671	0.62616	0.71081	0.36128	0.61815	0.75700	0.89202	0.85844	0.89773
	CATEGORY A	(Ps)	(n/s)	(n/s)	0.39525	0.38119	(n/s)	0.56655	0.57724	0.84630	0.67145	0.85459
	CATEGORY B	(Ps)	0.36684	-0.25939	0.53882	0.56475	0.20735	0.52601	0.78939	0.87930	0.81068	0.82637
GRNPERF	WHOLE SAMPLE	(Ps)	0.17939	(n/s)	0.15343	0.37255	p < 0.10	0.25976	0.34259	0.28883	0.36567	0.28883
	WHOLE SAMPLE	(Sp)	0.15480	(n/s)	(n/s)	0.31860	(n/s)	0.21165	0.32244	0.23776	0.34428	0.26711
	MANAGEMENT	(Ps)	(n/s)	(n/s)	(n/s)	0.44874	(n/s)	(n/s)	0.45243	p < 0.10	p < 0.10	0.29882
	CATEGORY A	(Ps)	(n/s)	-0.37097	(n/s)	(n/s)	(n/s)	(n/s)	(n/s)	(n/s)	0.34911	(n/s)
	CATEGORY B	(Ps)	(n/s)	(n/s)	0.16741	0.43478	(n/s)	0.36996	0.36509	0.29621	0.33725	0.27968

			SELPERF	SUPPERF	NPERCATT	NPERCEVF	PERMCOP	GRNPERF
COMGOAL	WHOLE SAMPLE	(Ps)						
	WHOLE SAMPLE	(Sp)						
	MANAGEMENT	(Ps)						
	CATEGORY A	(Ps)						
	CATEGORY B	(Ps)						
COMSAFE	WHOLE SAMPLE	(Ps)						
	WHOLE SAMPLE	(Sp)						
	MANAGEMENT	(Ps)						
	CATEGORY A	(Ps)						
	CATEGORY B	(Ps)						
COMGWDP	WHOLE SAMPLE	(Ps)						
	WHOLE SAMPLE	(Sp)						
	MANAGEMENT	(Ps)						
	CATEGORY A	(Ps)						
	CATEGORY B	(Ps)						
SELPERF	WHOLE SAMPLE	(Ps)	1.00000					
	WHOLE SAMPLE	(Sp)	1.00000					
	MANAGEMENT	(Ps)	1.00000					
	CATEGORY A	(Ps)	1.00000					
	CATEGORY B	(Ps)	1.00000					
SUPPERF	WHOLE SAMPLE	(Ps)	.....	1.00000				
	WHOLE SAMPLE	(Sp)	.....	1.00000				
	MANAGEMENT	(Ps)	.....	1.00000				
	CATEGORY A	(Ps)	.....	1.00000				
	CATEGORY B	(Ps)	.....	1.00000				
NPERCATT	WHOLE SAMPLE	(Ps)	(n/s)	.....	1.00000			
	WHOLE SAMPLE	(Sp)	(n/s)	.....	1.00000			
	MANAGEMENT	(Ps)	p < 0.10	.....	1.00000			
	CATEGORY A	(Ps)	(n/s)	.....	1.00000			
	CATEGORY B	(Ps)	(n/s)	.....	1.00000			
NPERCEVF	WHOLE SAMPLE	(Ps)	0.20537	.....	0.22554	1.00000		
	WHOLE SAMPLE	(Sp)	0.14123	.....	0.14281	1.00000		
	MANAGEMENT	(Ps)	0.37201	.....	0.48813	1.00000		
	CATEGORY A	(Ps)	(n/s)	.....	(n/s)	1.00000		
	CATEGORY B	(Ps)	0.19879	.....	0.20034	1.00000		
PERMCOP	WHOLE SAMPLE	(Ps)	0.25641	.....	0.20919	0.60510	1.00000	
	WHOLE SAMPLE	(Sp)	0.23363	.....	0.14927	0.61483	1.00000	
	MANAGEMENT	(Ps)	0.32396	.....	0.44864	0.74042	1.00000	
	CATEGORY A	(Ps)	p < 0.10	.....	(n/s)	0.41968	1.00000	
	CATEGORY B	(Ps)	0.22255	.....	p < 0.10	0.63082	1.00000	
GRNPERF	WHOLE SAMPLE	(Ps)	0.90643	.....	0.13469	0.31135	0.38391	1.00000
	WHOLE SAMPLE	(Sp)	0.90585	.....	(n/s)	0.25485	0.35725	1.00000
	MANAGEMENT	(Ps)	0.91697	.....	(n/s)	0.37823	0.37387	1.00000
	CATEGORY A	(Ps)	0.89563	.....	(n/s)	(n/s)	p < 0.10	1.00000
	CATEGORY B	(Ps)	0.90779	.....	(n/s)	0.36594	0.37827	1.00000

APPENDIX C3-1

** = p < 0.001
* = p < 0.01
# = p < 0.05
@ = p < 0.10

INTERCORRELATIONS MATRIX : PARTICIPATION ITEMS (FIRST SURVEY) (N = 525)

	PFNPAR ITEM 1	PFNPAR ITEM 2	PFNPAR ITEM 3	PFNPAR ITEM 4	PFNPAR ITEM 5	PFNPAR ITEM 6	PPGOAL ITEM 1	PPGOAL ITEM 2	PPGOAL ITEM 3	PPGOAL ITEM 4	PPGOAL ITEM 5	PPGOAL ITEM 6
PFNPAR - 1	1.00 **											
PFNPAR - 2	0.39 **	1.00 **										
PFNPAR - 3	0.05	0.25 **	1.00 **									
PFNPAR - 4	0.13 *	0.13 *	0.00	1.00 **								
PFNPAR - 5	0.17 **	0.43 **	0.12 *	0.18 **	1.00 **							
PFNPAR - 6	0.19 **	0.36 **	0.14 *	0.03	0.26 **	1.00 **						
PPGOAL - 1	0.16 **	0.19 **	0.06	0.02	0.14 *	0.22 **	1.00 **					
PPGOAL - 2	0.16 **	0.17 **	0.08 @	0.00	0.22 **	0.17 **	0.39 **	1.00 **				
PPGOAL - 3	0.06	0.14 *	0.01	0.03	0.12 *	0.07	0.34 **	0.33 **	1.00 **			
PPGOAL - 4	0.13 *	0.17 **	0.06	-0.01	0.20 **	0.25 **	0.35 **	0.53 **	0.34 **	1.00 **		
PPGOAL - 5	0.21 **	0.21 **	0.05	0.03	0.30 **	0.21 **	0.29 **	0.43 **	0.25 **	0.45 **	1.00 **	
PPGOAL - 6	0.13 *	0.20 **	-0.07	0.00	0.14 **	0.14 **	0.23 **	0.24 **	0.28 **	0.24 **	0.43 **	1.00 **
PPGOAL - 7	0.19 **	0.26 **	0.07	0.09 #	0.36 **	0.22 **	0.27 **	0.36 **	0.35 **	0.36 **	0.51 **	0.39 **
PPGOAL - 8	0.21 **	0.27 **	0.06	0.09 #	0.22 **	0.13 *	0.22 **	0.35 **	0.32 **	0.36 **	0.59 **	0.43 **
PPGOAL - 9	0.14 **	0.11 #	0.09 #	0.06	0.14 *	0.15 **	0.29 **	0.31 **	0.21 **	0.38 **	0.25 **	0.18 **
PPAGWD - 1	0.15 **	0.16 **	0.02	0.03	0.19 **	0.05	0.34 **	0.32 **	0.31 **	0.25 **	0.21 **	0.21 **
PPAGWD - 2	0.14 *	0.17 **	0.06	0.13 *	0.15 **	0.08 @	0.27 **	0.29 **	0.23 **	0.26 **	0.25 **	0.15 **
PPAGWD - 3	0.09 #	0.13 *	0.11 #	0.06	0.14 *	0.12 *	0.29 **	0.26 **	0.24 **	0.27 **	0.19 **	0.15 **
PPAGWD - 4	0.11 #	0.20 **	0.08 @	0.10 #	0.26 **	0.16 **	0.27 **	0.30 **	0.21 **	0.30 **	0.22 **	0.18 **

	PPGOAL ITEM 7	PPGOAL ITEM 8	PPGOAL ITEM 9	PPAGWD ITEM 1	PPAGWD ITEM 2	PPAGWD ITEM 3	PPAGWD ITEM 4
PPGOAL - 7	1.00 **						
PPGOAL - 8	0.57 **	1.00 **					
PPGOAL - 9	0.24 **	0.26 **	1.00 **				
PPAGWD - 1	0.30 **	0.22 **	0.23 **	1.00 **			
PPAGWD - 2	0.28 **	0.25 **	0.27 **	0.47 **	1.00 **		
PPAGWD - 3	0.23 **	0.18 **	0.25 **	0.40 **	0.43 **	1.00 **	
PPAGWD - 4	0.29 **	0.27 **	0.20 **	0.37 **	0.46 **	0.48 **	1.00 **

APPENDIX C3-2

** = p < 0.001
* = p < 0.01
# = p < 0.05
@ = p < 0.10

INTERCORRELATIONS MATRIX : PERSONALITY ITEMS (FIRST SURVEY) (N = 525)

	LOCCONT ITEM 1	LOCCONT ITEM 2	LOCCONT ITEM 3	LOCCONT ITEM 4	LOCCONT ITEM 5	NEEDIND ITEM 1	NEEDIND ITEM 2	NEEDIND ITEM 3	NEEDIND ITEM 4	NEEDIND ITEM 5	NEEDIND ITEM 6	NEEDIND ITEM 7
LOCCONT - 1	1.00 **											
LOCCONT - 2	0.06	1.00 **										
LOCCONT - 3	0.35 **	0.09 #	1.00 **									
LOCCONT - 4	0.14 *	0.38 **	0.25 **	1.00 **								
LOCCONT - 5	-0.03	0.10 #	0.09 #	0.14 *	1.00 **							
NEEDIND - 1	0.05	0.04	0.03	0.12 *	0.01	1.00 **						
NEEDIND - 2	-0.03	0.02	0.10 #	0.05	0.11 #	-0.01	1.00 **					
NEEDIND - 3	-0.07 @	0.04	-0.09 #	-0.07	-0.20 **	-0.03	0.06	1.00 **				
NEEDIND - 4	-0.02	-0.01	0.03	0.05	0.04	0.16 **	-0.07	-0.10 #	1.00 **			
NEEDIND - 5	-0.05	0.03	-0.02	-0.04	-0.18 **	-0.12 *	-0.06	0.20 **	-0.03	1.00 **		
NEEDIND - 6	0.03	0.07	0.01	0.07 @	0.22 **	0.06	0.12 *	-0.24 **	-0.06	-0.12 *	1.00 **	
NEEDIND - 7	-0.08 @	0.01	-0.03	-0.13 *	0.20 **	0.11 #	0.04	-0.15 **	0.17 **	-0.07 @	0.16 **	1.00 **
NEEDIND - 8	0.03	-0.04	0.06	-0.03	-0.20 **	-0.06	-0.06	0.06	0.04	0.19 **	-0.10 *	-0.15 **
NEEDIND - 9	-0.09 #	0.09 #	0.01	0.01	0.10 #	0.10 #	0.11 #	0.00	-0.01	-0.01	0.01	0.11 #
AUTHORM - 1	0.04	0.00	0.06	0.10 #	0.05	0.01	0.07	-0.18 **	-0.10 #	-0.06	0.25 **	0.01
AUTHORM - 2	-0.09 #	0.03	-0.04	-0.01	0.18 **	0.05	0.09 #	0.04	-0.06	-0.05	0.06	0.19 **
AUTHORM - 3	0.07 @	0.11 #	0.11 #	0.21 **	0.11 #	0.21	-0.05	-0.08 @	0.08 @	-0.15 **	0.13 *	0.03
AUTHORM - 4	0.00	0.03	-0.04	-0.11 #	-0.08 @	-0.04	0.09 #	0.13 *	0.01	0.08 @	-0.04	-0.01
AUTHORM - 5	-0.07	-0.03	-0.11 #	-0.17 **	-0.18 **	0.01	0.00	0.15 **	-0.05	0.08 @	-0.05	-0.05
AUTHORM - 6	0.01	-0.06	-0.04	-0.13 *	0.01	-0.04	-0.03	-0.02	0.02	0.08 @	-0.01	0.01
AUTHORM - 7	-0.15 **	0.05	-0.02	-0.03	0.16 **	0.04	0.17 **	-0.03	0.04	-0.03	0.16 **	0.14 *
AUTHORM - 8	0.04	-0.04	0.10 #	0.07	0.17 **	0.08 @	0.06	-0.18 **	0.01	-0.08 @	0.17 **	0.05

	NEEDIND ITEM 8	NEEDIND ITEM 9	AUTHORM ITEM 1	AUTHORM ITEM 2	AUTHORM ITEM 3	AUTHORM ITEM 4	AUTHORM ITEM 5	AUTHORM ITEM 6	AUTHORM ITEM 7	AUTHORM ITEM 8
NEEDIND - 8	1.00 **									
NEEDIND - 9	-0.06	1.00 **								
AUTHORM - 1	-0.04	-0.02	1.00 **							
AUTHORM - 2	-0.15 **	0.12 *	0.18 **	1.00 **						
AUTHORM - 3	-0.02	0.06	0.22 **	0.16 **	1.00 **					
AUTHORM - 4	-0.02	-0.05	-0.21 **	-0.16 **	-0.20 **	1.00 **				
AUTHORM - 5	0.11 #	-0.07	-0.08 @	-0.16 **	-0.17 **	0.20 **	1.00 **			
AUTHORM - 6	0.01	-0.06	-0.12 *	-0.11 *	-0.17 **	0.27 **	0.31 **	1.00 **		
AUTHORM - 7	-0.04	0.18 **	-0.07	0.26 **	0.09 #	-0.02	-0.22 **	-0.15 **	1.00 **	
AUTHORM - 8	-0.05	0.03	0.33 **	0.21 **	0.27 **	-0.24 **	-0.23 **	-0.13 **	0.21 **	1.00 **

APPENDIX C3-3

** = p < 0.001
* = p < 0.01
# = p < 0.05
@ = p < 0.10

INTERCORRELATIONS MATRIX : MANAGERIAL CONTROL ITEMS (FIRST SURVEY) (N = 525)

	PERCATT ITEM 1	PERCATT ITEM 2	PERCATT ITEM 3	PERCATT ITEM 4	PERCDIF ITEM 1	PERCDIF ITEM 2	PERCDIF ITEM 3	PERCDIF ITEM 4	PERCEVF ITEM 1	PERCEVF ITEM 2	PERCEVF ITEM 3	PERCEVA ITEM 1	PERCEV ITEM 2
PERCATT - 1	1.00 **												
PERCATT - 2	0.20 **	1.00 **											
PERCATT - 3	0.21 **	0.06	1.00 **										
PERCATT - 4	0.01	0.40 **	0.22 **	1.00 **									
PERCDIF - 1	-0.44 **	-0.20 **	-0.24 **	-0.02	1.00 **								
PERCDIF - 2	-0.15 **	-0.30 **	-0.08 @	-0.29 **	0.20 **	1.00 **							
PERCDIF - 3	0.05	0.12 *	-0.06	0.01	0.02	-0.15 **	1.00 **						
PERCDIF - 4	0.06	-0.05	0.03	-0.10 #	0.10 #	0.22 **	-0.18 **	1.00 **					
PERCEVF - 1	0.27 **	0.02	0.33 **	0.02	-0.23 **	-0.05	-0.02	0.09 @	1.00 **				
PERCEVF - 2	0.11 #	0.03	0.26 **	-0.02	-0.17 **	0.05	-0.06	-0.04	0.51 **	1.00 **			
PERCEVF - 3	0.08 @	0.03	0.02	0.08 @	-0.06	-0.10 #	0.02	-0.04	0.05	0.01	1.00 **		
PERCEVA - 1	0.28 **	0.02	0.23 **	-0.01	-0.28	-0.02	-0.01	0.07	0.50 **	0.47 **	0.06	1.00 **	
PERCEVA - 2	0.19 **	0.04	0.22 **	0.04	-0.21 **	0.05	-0.10 #	0.06	0.32 **	0.37 **	0.02	0.44 **	1.00
PERCEVA - 3	0.24 **	-0.01	0.25 **	0.00	-0.20 **	0.11 #	-0.13 *	0.07	0.34 **	0.32 **	0.01	0.34 **	0.50
PERCEVA - 4	0.20 **	0.07 @	0.25 **	0.03	-0.18 **	-0.06	-0.04	0.04	0.38 **	0.33 **	0.11 #	0.35 **	0.48
PEROLAP - 1	0.24 **	0.02	0.12 *	-0.05	-0.16 **	-0.03	-0.14 *	0.13 *	0.44 **	0.31 **	0.04	0.34 **	0.26
PEROLAP - 2	0.19 **	0.05	0.19 **	-0.03	-0.17 **	-0.01	-0.13 *	0.05	0.27 **	0.28 **	-0.06	0.27 **	0.17
PEROLAP - 3	0.17 **	0.06	0.18 **	-0.04	-0.19 **	-0.17 **	-0.09 #	0.08 @	0.19 **	0.24 **	-0.01	0.21 **	0.22
PEROLAP - 4	0.03	0.00	-0.14 **	-0.08 @	-0.10 #	0.02	0.09 #	0.06	-0.13 *	-0.15 **	0.05	-0.11 #	-0.19
PEROLAP - 5	0.13 *	0.18 **	-0.01	0.01	-0.10 #	-0.03	0.01	-0.12 *	0.12 *	0.16 **	0.11 #	0.12 *	0.08
PERFEED - 1	0.21 **	0.02	0.05	-0.02	-0.10 #	0.03	-0.14 *	0.03	0.31 **	0.21 **	-0.01	0.24 **	0.30
PERFEED - 2	0.26 **	-0.01	0.15 **	-0.03	-0.23 **	-0.02	-0.15 **	-0.01	0.28 **	0.24 **	0.04	0.29 **	0.33
PERFEED - 3	0.24 **	0.01	0.19 **	-0.11 #	-0.10 #	0.06	-0.12 *	0.07 @	0.38 **	0.24 **	0.07 @	0.27 **	0.29
PERFEED - 4	0.12 *	0.06	0.02	0.00	-0.09 #	0.09 #	-0.13 *	0.03	0.31 **	0.20 **	0.03	0.22 **	0.28
PERFEED - 5	-0.03	0.03	-0.10 #	0.08 @	0.05	-0.08 @	-0.07	0.09 #	-0.07	-0.06	0.18 **	-0.10 #	-0.03

	PERCEVA ITEM 3	PERCEVA ITEM 4	PEROLAP ITEM 1	PEROLAP ITEM 2	PEROLAP ITEM 3	PEROLAP ITEM 4	PEROLAP ITEM 5	PERFEED ITEM 1	PERFEED ITEM 2	PERFEED ITEM 3	PERFEED ITEM 4	PERFEED ITEM 5
PERCEVA - 3	1.00 **											
PERCEVA - 4	0.58 **	1.00 **										
PEROLAP - 1	0.27 **	0.31 **	1.00 **									
PEROLAP - 2	0.27 **	0.30 **	0.39 **	1.00 **								
PEROLAP - 3	0.23 **	0.20 **	0.29 **	0.43 **	1.00 **							
PEROLAP - 4	-0.14 *	-0.15 **	-0.07 @	-0.09 #	-0.12 *	1.00 **						
PEROLAP - 5	0.12 *	0.12 *	0.15 **	0.17 **	0.07	0.13 *	1.00 **					
PERFEED - 1	0.31 **	0.31 **	0.33 **	0.23 **	0.20 **	-0.03	0.15 **	1.00 **				
PERFEED - 2	0.37 **	0.40 **	0.27 **	0.14 *	0.09 #	-0.08 @	0.06	0.43 **	1.00 **			
PERFEED - 3	0.42 **	0.41 **	0.30 **	0.25 **	0.22 **	-0.19 **	0.12 *	0.43 **	0.48 **	1.00 **		
PERFEED - 4	0.25 **	0.30 **	0.26 **	0.14 *	0.16 **	-0.05	0.10 #	0.40 **	0.44 **	0.50 **	1.00 **	
PERFEED - 5	0.07	0.02	-0.04	-0.06	-0.13 *	0.11 #	0.03	-0.03	0.09 #	0.02	-0.01	1.00 **

INTERCORRELATIONS MATRIX : MANAGERIAL COMMITMENT ITEMS (FIRST SURVEY) (N = 525)

** = p < 0.001
* = p < 0.01
# = p < 0.05
@ = p < 0.10

	COMFINP ITEM 1	COMFINP ITEM 2	COMFINP ITEM 3	COMGOAL ITEM 1	COMGOAL ITEM 2	COMGOAL ITEM 3	COMGOAL ITEM 4	COMGOAL ITEM 5	COMGOAL ITEM 6	COMSAFE ITEM 1	COMSAFE ITEM 2	COMSAFE ITEM 3	COMSAF ITEM
COMFINP - 1	1.00 **												
COMFINP - 2	0.32 **	1.00 **											
COMFINP - 3	0.32 **	0.38 **	1.00 **										
COMGOAL - 1	0.09 #	0.13 *	0.14 *	1.00 **									
COMGOAL - 2	0.36 **	0.23 **	0.32 **	0.22 **	1.00 **								
COMGOAL - 3	0.40 **	0.21 **	0.35 **	0.13 *	0.43 **	1.00 **							
COMGOAL - 4	0.34 **	0.19 **	0.32 **	0.16 **	0.46 **	0.42 **	1.00 **						
COMGOAL - 5	0.25 **	0.09 #	0.17 **	0.19 **	0.37 **	0.28 **	0.53 **	1.00 **					
COMGOAL - 6	0.28 **	0.25 **	0.28 **	0.02	0.28 **	0.30 **	0.33 **	0.33 **	1.00 **				
COMSAFE - 1	0.23 **	0.23 **	0.29 **	0.11 *	0.40 **	0.35 **	0.37 **	0.36 **	0.20 **	1.00 **			
COMSAFE - 2	0.30 **	0.23 **	0.26 **	0.15 **	0.37 **	0.30 **	0.39 **	0.34 **	0.22 **	0.65 **	1.00 **		
COMSAFE - 3	0.12 *	0.32 **	0.40 **	0.19 **	0.23 **	0.21 **	0.31 **	0.22 **	0.15 **	0.43 **	0.48 **	1.00 **	
COMSAFE - 4	-0.11 #	0.00	0.00	0.08 @	-0.07	-0.12 *	-0.05	0.03	-0.11 #	0.05	0.04	0.11 #	1.00
COMGWDP - 1	0.23 **	0.18 **	0.30 **	0.09 @	0.28 **	0.31 **	0.29 **	0.26 **	0.21 **	0.31 **	0.29 **	0.35 **	0.15
COMGWDP - 2	0.23 **	0.25 **	0.39 **	0.04	0.29 **	0.29 **	0.30 **	0.22 **	0.24 **	0.35 **	0.34 **	0.36 **	0.11
COMGWDP - 3	0.36 **	0.21 **	0.41 **	0.11 #	0.42 **	0.36 **	0.39 **	0.33 **	0.34 **	0.36 **	0.33 **	0.24 **	0.01
COMGWDP - 4	-0.04	-0.06	0.14 *	0.16 **	0.04	-0.01	-0.06	0.01	0.05	-0.05	-0.03	-0.08 #	0.14

	COMGWDP ITEM 1	COMGWDP ITEM 2	COMGWDP ITEM 3	COMGWDP ITEM 4
COMGWDP - 1	1.00 **			
COMGWDP - 2	0.57 **	1.00 **		
COMGWDP - 3	0.39 **	0.46 **	1.00 **	
COMGWDP - 4	0.07 #	0.12 *	0.12 *	1.00 **

INTERCORRELATIONS MATRIX : SATISFACTION ITEMS (FIRST SURVEY) (N = 525)

** = p < 0.001
* = p < 0.01
# = p < 0.05
@ = p < 0.10

	FINSAT ITEM 1	FINSAT ITEM 2	FINSAT ITEM 3	FINSAT ITEM 4	FINSAT ITEM 5	GWDSAT ITEM 1	GWDSAT ITEM 2	GWDSAT ITEM 3	JOBSAT ITEM 1	JOBSAT ITEM 2	JOBSAT ITEM 3	JOBSAT ITEM 4	JOBSAT ITEM 5
FINSAT - 1	1.00 **												
FINSAT - 2	0.41 **	1.00 **											
FINSAT - 3	0.54 **	0.46 **	1.00 **										
FINSAT - 4	0.32 **	0.33 **	0.36 **	1.00 **									
FINSAT - 5	0.43 **	0.32 **	0.55 **	0.30 **	1.00 **								
GWDSAT - 1	0.17 **	0.24 **	0.26 **	0.14 **	0.24 **	1.00 **							
GWDSAT - 2	-0.08 #	-0.07 @	-0.02	0.02	-0.05	-0.08 @	1.00 **						
GWDSAT - 3	0.20 **	0.29 **	0.24 **	0.29 **	0.22 **	0.28 **	-0.06	1.00 **					
JOBSAT - 1	0.18 **	0.27 **	0.20 **	0.21 **	0.17 **	0.27 **	-0.12 *	0.23 **	1.00 **				
JOBSAT - 2	-0.01	0.00	0.01	0.05	0.02	0.05	-0.07	0.04	0.11 #	1.00 **			
JOBSAT - 3	0.15 **	0.16 **	0.15 **	0.18 **	0.11 #	0.08 @	-0.09 #	0.11 #	0.49 **	0.12 *	1.00 **		
JOBSAT - 4	0.21 **	0.08 @	0.16 **	0.14 **	0.21 **	0.11 #	-0.15 **	0.11 #	0.25 **	0.21 **	0.18 **	1.00 **	
JOBSAT - 5	0.15 **	0.05	0.06	0.01	0.08 @	0.01	-0.04	0.08 @	0.14 *	0.14 *	0.14 *	0.39 **	1.00 *
JOBSAT - 6	0.23 **	0.08 @	0.17 **	0.07 @	0.14 *	0.04	-0.02	0.08 @	0.15 **	0.06	0.24 **	0.21 **	0.29 *
JOBSAT - 7	0.15 **	0.23 **	0.15 **	0.20 **	0.17 **	0.26 **	-0.02	0.20 **	0.51 **	0.14 *	0.46 **	0.24 **	0.17 *
JOBSAT - 8	0.10 #	0.09 #	0.15 **	0.04	0.11 *	0.10 #	-0.13 *	0.09 #	0.15 **	0.43 **	0.17 **	0.29 **	0.27 *
JOBSAT - 9	0.23 **	0.24 **	0.19 **	0.15 **	0.21 **	0.32 **	-0.09 #	0.21 **	0.46 **	0.13 *	0.44 **	0.29 **	0.25 *
JOBSAT - 10	0.26 **	0.32 **	0.22 **	0.13 *	0.21 **	0.29 **	-0.08 @	0.29 **	0.52 **	0.15 **	0.47 **	0.23 **	0.28 *
JOBSAT - 11	0.22 **	0.23 **	0.25 **	0.11 *	0.23 **	0.10 #	-0.11 #	0.21 **	0.21 **	0.06	0.19 **	0.19 **	0.32 *

	JOBSAT ITEM 6	JOBSAT ITEM 7	JOBSAT ITEM 8	JOBSAT ITEM 9	JOBSAT ITEM 10	JOBSAT ITEM 11
JOBSAT - 6	1.00 **					
JOBSAT - 7	0.32 **	1.00 **				
JOBSAT - 8	0.12 *	0.21 **	1.00 **			
JOBSAT - 9	0.30 **	0.59 **	0.25 **	1.00 **		
JOBSAT - 10	0.31 **	0.62 **	0.21 **	0.70 **	1.00 **	
JOBSAT - 11	0.39 **	0.36 **	0.11 *	0.42 **	0.46 **	1.00 **

INTERCORRELATIONS MATRIX : SATISFACTION ITEMS (FIRST SURVEY) (N = 525)

** = p < 0.001
* = p < 0.01
# = p < 0.05
@ = p < 0.10

	FINSAT ITEM 1	FINSAT ITEM 2	FINSAT ITEM 3	FINSAT ITEM 4	FINSAT ITEM 5	GWDSAT ITEM 1	GWDSAT ITEM 2	GWDSAT ITEM 3	JOBSAT ITEM 1	JOBSAT ITEM 2	JOBSAT ITEM 3	JOBSAT ITEM 4	JOBSAT ITEM 5
FINSAT - 1	1.00 **												
FINSAT - 2	0.41 **	1.00 **											
FINSAT - 3	0.54 **	0.46 **	1.00 **										
FINSAT - 4	0.32 **	0.33 **	0.36 **	1.00 **									
FINSAT - 5	0.43 **	0.32 **	0.55 **	0.30 **	1.00 **								
GWDSAT - 1	0.17 **	0.24 **	0.26 **	0.14 **	0.24 **	1.00 **							
GWDSAT - 2	-0.08 #	-0.07 @	-0.02	0.02	-0.05	-0.08 @	1.00 **						
GWDSAT - 3	0.20 **	0.29 **	0.24 **	0.29 **	0.22 **	0.28 **	-0.06	1.00 **					
JOBSAT - 1	0.18 **	0.27 **	0.20 **	0.21 **	0.17 **	0.27 **	-0.12 *	0.23 **	1.00 **				
JOBSAT - 2	-0.01	0.00	0.01	0.05	0.02	0.05	-0.07	0.04	0.11 #	1.00 **			
JOBSAT - 3	0.15 **	0.16 **	0.15 **	0.18 **	0.11 #	0.08 @	-0.09 #	0.11 #	0.49 **	0.12 *	1.00 **		
JOBSAT - 4	0.21 **	0.08 @	0.16 **	0.14 **	0.21 **	0.11 #	-0.15 **	0.11 #	0.25 **	0.21 **	0.18 **	1.00 **	
JOBSAT - 5	0.15 **	0.05	0.06	0.01	0.08 @	0.01	-0.04	0.08 @	0.14 *	0.14 *	0.14 *	0.39 **	1.00 **
JOBSAT - 6	0.23 **	0.08 @	0.17 **	0.07 @	0.14 *	0.04	-0.02	0.08 @	0.15 **	0.06	0.24 **	0.21 **	0.29 **
JOBSAT - 7	0.15 **	0.23 **	0.15 **	0.20 **	0.17 **	0.26 **	-0.02	0.20 **	0.51 **	0.14 *	0.46 **	0.24 **	0.17 **
JOBSAT - 8	0.10 #	0.09 #	0.15 **	0.04	0.11 *	0.10 #	-0.13 *	0.09 #	0.15 **	0.43 **	0.17 **	0.29 **	0.27 **
JOBSAT - 9	0.23 **	0.24 **	0.19 **	0.15 **	0.21 **	0.32 **	-0.09 #	0.21 **	0.46 **	0.13 *	0.44 **	0.29 **	0.25 **
JOBSAT - 10	0.26 **	0.32 **	0.22 **	0.13 *	0.21 **	0.29 **	-0.08 @	0.29 **	0.52 **	0.15 **	0.47 **	0.23 **	0.28 **
JOBSAT - 11	0.22 **	0.23 **	0.25 **	0.11 *	0.23 **	0.10 #	-0.11 #	0.21 **	0.21 **	0.06	0.19 **	0.19 **	0.32 **

	JOBSAT ITEM 6	JOBSAT ITEM 7	JOBSAT ITEM 8	JOBSAT ITEM 9	JOBSAT ITEM 10	JOBSAT ITEM 11
JOBSAT - 6	1.00 **					
JOBSAT - 7	0.32 **	1.00 **				
JOBSAT - 8	0.12 *	0.21 **	1.00 **			
JOBSAT - 9	0.30 **	0.59 **	0.25 **	1.00 **		
JOBSAT - 10	0.31 **	0.62 **	0.21 **	0.70 **	1.00 **	
JOBSAT - 11	0.39 **	0.36 **	0.11 *	0.42 **	0.46 **	1.00 **

INTERCORRELATIONS MATRIX : PERFORMANCE ITEMS (FIRST SURVEY) (N = 525)

** = p < 0.001
* = p < 0.01
# = p < 0.05
@ = p < 0.10

	SELPERF ITEM 1	SELPERF ITEM 2	SELPERF ITEM 3	SELPERF ITEM 4	SELPERF ITEM 5	SELPERF ITEM 6	SELPERF ITEM 7	SELPERF ITEM 8	SELPERF ITEM 9	SELPERF ITEM 10	PRSTAY ITEM 1	PRSTAY ITEM 2	PRSTAY ITEM 3
SELPERF - 1	1.00 **												
SELPERF - 2	0.45 **	1.00 **											
SELPERF - 3	0.48 **	0.46 **	1.00 **										
SELPERF - 4	0.50 **	0.51 **	0.56 **	1.00 **									
SELPERF - 5	0.44 **	0.48 **	0.44 **	0.53 **	1.00 **								
SELPERF - 6	0.41 **	0.45 **	0.51 **	0.52 **	0.42 **	1.00 **							
SELPERF - 7	0.49 **	0.45 **	0.42 **	0.47 **	0.42 **	0.40 **	1.00 **						
SELPERF - 8	0.45 **	0.44 **	0.47 **	0.53 **	0.46 **	0.39 **	0.43 **	1.00 **					
SELPERF - 9	0.48 **	0.54 **	0.46 **	0.58 **	0.47 **	0.41 **	0.42 **	0.51 **	1.00 **				
SELPERF - 10	0.51 **	0.38 **	0.39 **	0.43 **	0.40 **	0.33 **	0.43 **	0.51 **	0.49 **	1.00 **			
PRSTAY - 1	0.09 #	0.17 **	0.10 #	0.19 **	0.11 #	0.17 **	0.19 **	0.15 **	0.10 #	0.15 **	1.00 **		
PRSTAY - 2	-0.07	-0.13 *	-0.06	-0.14 **	-0.01	-0.02	-0.04	-0.00	-0.08 @	-0.06	-0.01	1.00 **	
PRSTAY - 3	0.03	0.10 #	0.08 @	0.16 **	0.02	0.07	0.08 @	0.04	0.08 @	0.07	0.23 **	0.30 **	1.00 *
PRSTAY - 4	0.06	0.13 *	0.08 @	0.10 #	0.06	0.10 #	0.04	0.04	0.13 *	0.00	0.13 *	0.08 @	0.18 *
PRSTAY - 5	0.10 #	0.15 **	0.07	0.15 **	0.06	0.07 @	0.11 #	0.05	0.15 **	0.05	0.20 **	0.15 **	0.27 *

	PRSTAY ITEM 4	PRSTAY ITEM 5
PRSTAY - 4	1.00 **	
PRSTAY - 5	0.15 **	1.00 **

APPENDIX D

MODERATED MULTIPLE REGRESSION REPORTS

CONTENTS:

APPENDIX REF.	INDEPENDENT VARIABLE	DEPENDENT VARIABLE	HIERARCHY LEVEL	WORK SITE
D-1	PFNPAR	JOBSAT	WHOLE SAMPLE	ALL
D-1A	PFNPAR	JOBSAT	MANAGEMENT	ALL
D-1B	PFNPAR	JOBSAT	CATEGORY A	ALL
D-1C	PFNPAR	JOBSAT	CATEGORY B	ALL
D-1D	PFNPAR	JOBSAT	WHOLE SAMPLE	ABOVE
D-1E	PFNPAR	JOBSAT	WHOLE SAMPLE	BELOW
D-2	PPGOAL	JOBSAT	WHOLE SAMPLE	ALL
D-2A	PPGOAL	JOBSAT	MANAGEMENT	ALL
D-2B	PPGOAL	JOBSAT	CATEGORY A	ALL
D-2C	PPGOAL	JOBSAT	CATEGORY B	ALL
D-2D	PPGOAL	JOBSAT	WHOLE SAMPLE	ABOVE
D-2E	PPGOAL	JOBSAT	WHOLE SAMPLE	BELOW
D-3	PPSAFE	JOBSAT	WHOLE SAMPLE	ALL
D-3A	PPSAFE	JOBSAT	MANAGEMENT	ALL
D-3B	PPSAFE	JOBSAT	CATEGORY A	ALL
D-3C	PPSAFE	JOBSAT	CATEGORY B	ALL
D-3D	PPSAFE	JOBSAT	WHOLE SAMPLE	ABOVE
D-3E	PPSAFE	JOBSAT	WHOLE SAMPLE	BELOW
D-4	PPAGWD	JOBSAT	WHOLE SAMPLE	ALL
D-4A	PPAGWD	JOBSAT	MANAGEMENT	ALL
D-4B	PPAGWD	JOBSAT	CATEGORY A	ALL
D-4C	PPAGWD	JOBSAT	CATEGORY B	ALL
D-4D	PPAGWD	JOBSAT	WHOLE SAMPLE	ABOVE
D-4E	PPAGWD	JOBSAT	WHOLE SAMPLE	BELOW
D-5	JOBSAT	SELPERF	WHOLE SAMPLE	ALL
D-5A	JOBSAT	SELPERF	MANAGEMENT	ALL
D-5B	JOBSAT	SELPERF	CATEGORY A	ALL
D-5C	JOBSAT	SELPERF	CATEGORY B	ALL
D-5D	JOBSAT	SELPERF	WHOLE SAMPLE	ABOVE
D-5E	JOBSAT	SELPERF	WHOLE SAMPLE	BELOW
D-6	JOBSAT	SUPPERF	WHOLE SAMPLE	ALL
D-6A	JOBSAT	SUPPERF	MANAGEMENT	ALL
D-6B	JOBSAT	SUPPERF	CATEGORY A	ALL
D-6C	JOBSAT	SUPPERF	CATEGORY B	ALL
D-6D	JOBSAT	SUPPERF	WHOLE SAMPLE	ABOVE
D-6E	JOBSAT	SUPPERF	WHOLE SAMPLE	BELOW
D-7	JOBSAT	PROPGO	WHOLE SAMPLE	ALL
D-7A	JOBSAT	PROPGO	MANAGEMENT	ALL
D-7B	JOBSAT	PROPGO	CATEGORY A	ALL
D-7C	JOBSAT	PROPGO	CATEGORY B	ALL
D-7D	JOBSAT	PROPGO	WHOLE SAMPLE	ABOVE
D-7E	JOBSAT	PROPGO	WHOLE SAMPLE	BELOW

APPENDIX D

MODERATED MULTIPLE REGRESSION REPORTS

CONTENTS: (Continued)

APPENDIX REF.	INDEPENDENT VARIABLE	DEPENDENT VARIABLE	HIERARCHY LEVEL	WORK SITE
D-8	PFNPAR	FINSAT	WHOLE SAMPLE	ALL
D-9	PFNPAR	ATTCOM	WHOLE SAMPLE	ALL
D-10	PPGOAL	GWDSAT	WHOLE SAMPLE	ALL
D-11	PPGOAL	ATTCOM	WHOLE SAMPLE	ALL
D-12	PPSAFE	GWDSAT	WHOLE SAMPLE	ALL
D-13	PPSAFE	ATTCOM	WHOLE SAMPLE	ALL
D-14	PPAGWD	GWDSAT	WHOLE SAMPLE	ALL
D-15	PPAGWD	ATTCOM	WHOLE SAMPLE	ALL

APPENDIX D-1

MODERATED MULTIPLE REGRESSION ANALYSIS REPORT
DEPENDENT VARIABLE : JOBSAT; JOB SATISFACTION
INDEPENDENT VARIABLE : PFNPAR; PERCEIVED EXTENT OF FINANCIAL PARTICIPATION
HIERARCHY LEVEL : ALL WORK SITES : ALL

** = p < 0.001
* = p < 0.01
# = p < 0.05
@ = p < 0.10

FIRST SURVEY RESULTS: (n = 525)						SECOND SURVEY: (n = 234)	
VARIABLE	BETA	STD ERROR	R.SQ.	CHANGE IN R.SQ.	F-VALUE	R.SQ.	CHANGE IN R.SQ.
BIOGRAPHICAL:			0.087	0.087	6.149 **	0.117	0.117 **
MARR	-2.200 #	1.123					
AGE	0.141 *	0.049					
LANG	-0.400 @	0.215					
EDUC	0.088	0.361					
SITU	-1.656 #	0.729					
COURSE	1.648 #	0.706					
YEARS	0.122 #	0.058					
LEVEL	0.268	0.700					
MAIN EFFECT - INDEPENDENT VARIABLE:							
PFNPAR	0.590 **	0.077	0.180	0.093	12.531 **	0.264	0.147 **
MAIN EFFECTS - MODERATOR VARIABLES (GROUPED EFFECTS)							
PERSONALITY VARIABLES:			0.187	0.007	9.842 **	0.268	0.004 **
LOCCONT	0.011	0.103					
NEEDIND	-0.165 @	0.087					
AUTHORM	0.135	0.098					
MANAGERIAL CONTROL SYSTEM VARIABLES:			0.301	0.121	16.920 **	0.421	0.157 **
NPERCATT	0.226 #	0.096					
NPERCEVF	0.448 **	0.077					
PEROLAP	0.180 @	0.107					
PERFEED	0.195 #	0.096					
MANAGERIAL COMMITMENT COMBINED VARIABLE:							
PERMCOP	0.304 **	0.032	0.305	0.125	22.513 **	0.380	0.116 **
MODERATOR EFFECTS - INTERACTION TERMS (GROUPED EFFECTS):							
PERSONALITY VARIABLES:			0.189	0.002	7.880 **	0.270	0.002 **
PFNPAR X LOCCONT	-0.013	0.021					
PFNPAR X NEEDIND	-0.005	0.021					
PFNPAR X AUTHORM	-0.008	0.024					
(Significance test - Moderator effect:)					0.211		
MANAGERIAL CONTROL SYSTEM VARIABLES:			0.314	0.013	13.662 **	0.448	0.027 **
PFNPAR X NPERCATT	0.061 *	0.022					
PFNPAR X NPERCEVF	-0.020	0.017					
PFNPAR X PEROLAP	0.027	0.025					
PFNPAR X PERFEED	0.021	0.021					
(Significance test - Moderator effect:)					2.450 #		#
MANAGERIAL COMMITMENT COMBINED VARIABLE:							
PFNPAR X PERMCOP	0.002	0.006	0.305	0.000	20.438 **	0.380	0.000 **
(Significance test - Moderator effect:)					0.083		

APPENDIX D-1A

MODERATED MULTIPLE REGRESSION ANALYSIS REPORT — ** = p < 0.001
DEPENDENT VARIABLE : JOBSAT; JOB SATISFACTION — * = p < 0.01
INDEPENDENT VARIABLE : PFNPAR; PERCEIVED EXTENT OF FINANCIAL PARTICIPATION — # = p < 0.05
HIERARCHY LEVEL : MANAGEMENT WORK SITES : ALL — @ = p < 0.10

FIRST SURVEY RESULTS: (n = 46)						SECOND SURVEY: (n = 44)	
VARIABLE	BETA	STD ERROR	R.SQ.	CHANGE IN R.SQ.	F-VALUE	R.SQ.	CHANGE IN R.SQ.
BIOGRAPHICAL:			0.454	0.454	4.519 **	0.188	0.188
MARR	4.335	4.399					
AGE	0.270 #	0.122					
LANG	2.890 #	1.328					
EDUC	2.814 #	1.176					
SITU	-1.597	2.053					
COURSE	0.787	1.791					
TENURE	0.256 #	0.112					
MAIN EFFECT - INDEPENDENT VARIABLE:							
PFNPAR	-0.039	0.248	0.455	0.001	3.856 *	0.394	0.206 #
MAIN EFFECTS - MODERATOR VARIABLES (GROUPED EFFECTS):							
PERSONALITY VARIABLES:			0.479	0.024	2.839 *	0.424	0.030 #
LOCCONT	-0.164	0.374					
NEEDIND	-0.336	0.284					
AUTHORM	0.064	0.258					
MANAGERIAL CONTROL SYSTEM VARIABLES:			0.537	0.082	3.186 *	0.690	0.296 **
NPERCATT	-0.399	0.313					
NPERCEVF	0.571	0.376					
PEROLAP	0.264	0.326					
PERFEED	-0.503	0.352					
MANAGERIAL COMMITMENT COMBINED VARIABLE:							
PERMCOP	0.194	0.150	0.479	0.024	3.674 *	0.610	0.216 **
MODERATOR EFFECTS - INTERACTION TERMS (GROUPED EFFECTS):							
PERSONALITY VARIABLES:			0.520	0.041	2.396 #	0.581	0.157 *
PFNPAR X LOCCONT	-0.120	0.143					
PFNPAR X NEEDIND	0.017	0.078					
PFNPAR X AUTHORM	-0.154	0.111					
(Significance test - Moderator effect:)					0.881		#
MANAGERIAL CONTROL SYSTEM VARIABLES:			0.570	0.033	2.402 #	0.747	0.057 **
PFNPAR X NPERCATT	-0.066	0.140					
PFNPAR X NPERCEVF	0.137	0.152					
PFNAPR X PEROLAP	0.112	0.171					
PFNPAR X PERFEED	-0.035	0.091					
(Significance test - Moderator effect:)					0.559		
MANAGERIAL COMMITMENT COMBINED VARIABLE:							
PFNPAR X PERMCOP	-0.033	0.039	0.490	0.011	3.357 *	0.611	0.001 **
(Significance test - Moderator effect:)					0.739		

APPENDIX D-1B

MODERATED MULTIPLE REGRESSION ANALYSIS REPORT
DEPENDENT VARIABLE : JOBSAT; JOB SATISFACTION
INDEPENDENT VARIABLE : PFNPAR; PERCEIVED EXTENT OF FINANCIAL PARTICIPATION
HIERARCHY LEVEL : CATEGORY A WORK SITES : ALL

** = p < 0.001
* = p < 0.01
# = p < 0.05
@ = p < 0.10

FIRST SURVEY RESULTS: (n = 58)						SECOND SURVEY: (n = 40)	
VARIABLE	BETA	STD ERROR	R.SQ.	CHANGE IN R.SQ.	F-VALUE	R.SQ.	CHANGE IN R.SQ.
BIOGRAPHICAL:			0.198	0.198	1.764	0.256	0.256
MARR	3.032	3.030					
AGE	0.057	0.160					
LANG	-1.394	1.090					
EDUC	-2.208	1.970					
SITU	-0.120	2.324					
COURSE	1.273	2.375					
TENURE	0.430	0.272					
MAIN EFFECT - INDEPENDENT VARIABLE:							
PFNPAR	0.626 #	0.253	0.287	0.089	2.466 #	0.364	0.108 @
MAIN EFFECTS - MODERATOR VARIABLES (GROUPED EFFECTS):							
PERSONALITY VARIABLES:			0.377	0.090	2.532 #	0.437	0.073 @
LOCCONT	0.137	0.420					
NEEDIND	-0.344	0.314					
AUTHORM	0.758 #	0.335					
MANAGERIAL CONTROL SYSTEM VARIABLES:			0.551	0.264	4.607 **	0.450	0.086 @
NPERCATT	0.246	0.419					
NPERCEVF	0.628 *	0.210					
PEROLAP	0.520	0.411					
PERFEED	0.264	0.342					
MANAGERIAL COMMITMENT COMBINED VARIABLE:							
PERMCOP	0.332 *	0.107	0.407	0.120	3.661 *	0.442	0.078 #
MODERATOR EFFECTS - INTERACTION TERMS (GROUPED EFFECTS):							
PERSONALITY VARIABLES:			0.421	0.044	2.229 #	0.478	0.041
PFNPAR X LOCCONT	0.025	0.093					
PFNPAR X NEEDIND	0.041	0.068					
PFNPAR X AUTHORM	-0.134 @	0.077					
(Significance test - Moderator effect:)					1.073		
MANAGERIAL CONTROL SYSTEM VARIABLES:			0.665	0.114	5.077 **	0.458	0.008
PFNPAR X NPERCATT	0.034	0.069					
PFNPAR X NPERCEVF	-0.146 *	0.048					
PFNAPR X PEROLAP	-0.072	0.077					
PFNPAR X PERFEED	0.094	0.072					
(Significance test - Moderator effect:)					3.461 #		
MANAGERIAL COMMITMENT COMBINED VARIABLE:							
PFNPAR X PERMCOP	-0.036 @	0.019	0.448	0.041	3.818 **	0.444	0.002 #
(Significance test - Moderator effect:)					3.508 @		

APPENDIX D-1C

MODERATED MULTIPLE REGRESSION ANALYSIS REPORT
DEPENDENT VARIABLE : JOBSAT; JOB SATISFACTION
INDEPENDENT VARIABLE : PFNPAR; PERCEIVED EXTENT OF FINANCIAL PARTICIPATION
HIERARCHY LEVEL : CATEGORY B WORK SITES : ALL

** = p < 0.001
* = p < 0.01
# = p < 0.05
@ = p < 0.10

	FIRST SURVEY RESULTS: (n = 421)					SECOND SURVEY: (n = 150)	
VARIABLE	BETA	STD ERROR	R.SQ.	CHANGE IN R.SQ.	F-VALUE	R.SQ.	CHANGE IN R.SQ.
BIOGRAPHICAL:			0.057	0.057	3.538 *	0.072	0.072
MARR	-3.001 #	1.294					
AGE	0.115 #	0.056					
LANG	-0.189	0.237					
EDUC	-0.248	0.398					
SITU	-1.750 #	0.830					
COURSE	1.626 #	0.803					
TENURE	0.094	0.068					
MAIN EFFECT - INDEPENDENT VARIABLE:							
PFNPAR	0.619 **	0.087	0.161	0.104	9.870 **	0.197	0.125 **
MAIN EFFECTS - MODERATOR VARIABLES (GROUPED EFFECTS):							
PERSONALITY VARIABLES:			0.166	0.005	7.394 **	0.206	0.009 **
LOCCONT	0.042	0.112					
NEEDIND	-0.147	0.096					
AUTHORM	0.045	0.111					
MANAGERIAL CONTROL SYSTEM VARIABLES:			0.276	0.115	12.937 **	0.369	0.172 **
NPERCATT	0.241 #	0.106					
NPERCEVF	0.375 **	0.088					
PEROLAP	0.187	0.122					
PERFEED	0.279 *	0.108					
MANAGERIAL COMMITMENT COMBINED VARIABLE:							
PERMCOP	0.287 **	0.035	0.281	0.120	17.840 **	0.336	0.139 **
MODERATOR EFFECTS - INTERACTION TERMS (GROUPED EFFECTS):							
PERSONALITY VARIABLES:			0.167	0.001	5.832 **	0.210	0.004 *
PFNPAR X LOCCONT	-0.020	0.024					
PFNPAR X NEEDIND	-0.004	0.025					
PFNPAR X AUTHORM	0.010	0.028					
(Significance test - Moderator effect:)					0.254		
MANAGERIAL CONTROL SYSTEM VARIABLES:			0.292	0.016	10.424 **	0.416	0.047 **
PFNPAR X NPERCATT	0.059 #	0.025					
PFNPAR X NPERCEVF	0.001	0.019					
PFNAPR X PEROLAP	0.040	0.029					
PFNPAR X PERFEED	-0.003	0.025					
(Significance test - Moderator effect:)					2.365 @		#
MANAGERIAL COMMITMENT COMBINED VARIABLE:							
PFNPAR X PERMCOP	0.006	0.007	0.282	0.001	16.135 **	0.336	0.000 **
(Significance test - Moderator effect:)					0.847		

APPENDIX D-1D

MODERATED MULTIPLE REGRESSION ANALYSIS REPORT — ** = p < 0.001
DEPENDENT VARIABLE : JOBSAT; JOB SATISFACTION — * = p < 0.01
INDEPENDENT VARIABLE : PFNPAR; PERCEIVED EXTENT OF FINANCIAL PARTICIPATION — # = p < 0.05
HIERARCHY LEVEL : ALL — WORK SITES : ABOVE GROUND — @ = p < 0.10

	FIRST SURVEY RESULTS: (n = 225)					SECOND SURVEY: (n = 96)	
VARIABLE	BETA	STD ERROR	R.SQ.	CHANGE IN R.SQ.	F-VALUE	R.SQ.	CHANGE IN R.SQ.
BIOGRAPHICAL:			0.046	0.046	1.481	0.145	0.145 @
MARR	-0.892	1.489					
AGE	0.076	0.074					
LANG	-0.228	0.363					
EDUC	-0.614	0.503					
COURSE	1.076	1.078					
TENURE	0.036	0.086					
LEVEL	1.286	0.977					
MAIN EFFECT - INDEPENDENT VARIABLE:							
PFNPAR	0.441 **	0.128	0.095	0.049	2.850 *	0.259	0.114 *
MAIN EFFECTS - MODERATOR VARIABLES (GROUPED EFFECTS):							
PERSONALITY VARIABLES:			0.127	0.032	0.814 *	0.282	0.023 *
LOCCONT	0.060	0.171					
NEEDIND	-0.270 #	0.126					
AUTHORM	0.306 #	0.151					
MANAGERIAL CONTROL SYSTEM VARIABLES:			0.264	0.169	6.315 **	0.515	0.256 **
NPERCATT	-0.008	0.155					
NPERCEVF	0.474 **	0.119					
PEROLAP	0.334 #	0.150					
PERFEED	0.218	0.153					
MANAGERIAL COMMITMENT COMBINED VARIABLE:							
PERMCOP	0.294 **	0.049	0.228	0.133	7.039 **	0.441	0.182 **
MODERATOR EFFECTS - INTERACTION TERMS (GROUPED EFFECTS):							
PERSONALITY VARIABLES:			0.130	0.003	2.227 *	0.298	0.016 *
PFNPAR X LOCCONT	0.014	0.039					
PFNPAR X NEEDIND	0.020	0.030					
PFNPAR X AUTHORM	-0.010	0.038					
(Significance test - Moderator effect:)					0.194		
MANAGERIAL CONTROL SYSTEM VARIABLES:			0.285	0.021	5.153 **	0.603	0.088 **
PFNPAR X NPERCATT	0.065	0.041					
PFNPAR X NPERCEVF	0.001	0.027					
PFNAPR X PEROLAP	-0.069 @	0.037					
PFNPAR X PERFEED	0.014	0.038					
(Significance test - Moderator effect:)					1.493		*
MANAGERIAL COMMITMENT COMBINED VARIABLE:							
PFNPAR X PERMCOP	-0.004	0.010	0.229	0.001	6.327 **	0.449	0.008 **
(Significance test - Moderator effect:)					0.165		

APPENDIX D-1E

MODERATED MULTIPLE REGRESSION ANALYSIS REPORT
DEPENDENT VARIABLE : JOBSAT; JOB SATISFACTION
INDEPENDENT VARIABLE : PFNPAR; PERCEIVED EXTENT OF FINANCIAL PARTICIPATION
HIERARCHY LEVEL : ALL WORK SITES : BELOW GROUND

** = p < 0.001
* = p < 0.01
# = p < 0.05
@ = p < 0.10

	FIRST SURVEY RESULTS: (n = 300)					SECOND SURVEY: (n = 138)	
VARIABLE	BETA	STD ERROR	R.SQ.	CHANGE IN R.SQ.	F-VALUE	R.SQ.	CHANGE IN R.SQ.
BIOGRAPHICAL:			0.122	0.122	5.773 **	0.084	0.084 @
MARR	-4.428 #	1.745					
AGE	0.192 *	0.065					
LANG	-0.534 #	0.270					
EDUC	0.944 @	0.520					
COURSE	2.326 #	0.935					
TENURE	0.246 *	0.081					
LEVEL	-1.554	1.100					
MAIN EFFECT - INDEPENDENT VARIABLE:							
PFNPAR	0.655 **	0.097	0.240	0.118	11.467 **	0.251	0.167 **
MAIN EFFECTS - MODERATOR VARIABLES (GROUPED EFFECTS):							
PERSONALITY VARIABLES:			0.240	0.000	8.104 **	0.266	0.015 **
LOCCONT	-0.012	0.130					
NEEDIND	-0.044	0.122					
AUTHORM	0.012	0.133					
MANAGERIAL CONTROL SYSTEM VARIABLES:			0.346	0.106	12.688 **	0.349	0.098 **
NPERCATT	0.413 **	0.124					
NPERCEVF	0.405 **	0.103					
PEROLAP	0.056	0.157					
PERFEED	0.192	0.124					
MANAGERIAL COMMITMENT COMBINED VARIABLE:							
PERMCOP	0.305 **	0.042	0.354	0.114	17.728 **	0.311	0.060 **
MODERATOR EFFECTS - INTERACTION TERMS (GROUPED EFFECTS):							
PERSONALITY VARIABLES:			0.243	0.003	6.563 **	0.277	0.011 **
PFNPAR X LOCCONT	-0.037	0.027					
PFNPAR X NEEDIND	-0.021	0.030					
PFNPAR X AUTHORM	-0.013	0.033					
(Significance test - Moderator effect:)					0.934		
MANAGERIAL CONTROL SYSTEM VARIABLES:			0.382	0.036	10.965 **	0.366	0.017 **
PFNPAR X NPERCATT	0.059 #	0.027					
PFNPAR X NPERCEVF	-0.053 #	0.023					
PFNAPR X PEROLAP	0.105 *	0.034					
PFNPAR X PERFEED	0.024	0.026					
(Significance test - Moderator effect:)					4.139 *		
MANAGERIAL COMMITMENT COMBINED VARIABLE:							
PFNPAR X PERMCOP	0.005	0.008	0.355	0.001	15.972 **	0.328	0.017 **
(Significance test - Moderator effect:)					0.462		@

APPENDIX D-2

MODERATED MULTIPLE REGRESSION ANALYSIS REPORT
DEPENDENT VARIABLE : JOBSAT; JOB SATISFACTION
INDEPENDENT VARIABLE : PPGOAL; PERCEIVED EXTENT OF PARTICIPATION IN WORK-GOAL OR BUDGET SETTING

** = p < 0.001
* = p < 0.01
# = p < 0.05
@ = p < 0.10

HIERARCHY LEVEL : ALL WORK SITES : ALL

FIRST SURVEY RESULTS: (n = 525)						SECOND SURVEY: (n = 234)	
VARIABLE	BETA	STD ERROR	R.SQ.	CHANGE IN R.SQ.	F-VALUE	R.SQ.	CHANGE IN R.SQ.
BIOGRAPHICAL:			0.087	0.087	6.149 **	0.117	0.117 **
MARR	-2.200 #	1.123					
AGE	0.141 *	0.049					
LANG	-0.400 @	0.215					
EDUC	0.088	0.361					
SITU	-1.656 #	0.729					
COURSE	1.648 #	0.706					
YEARS	0.122 #	0.058					
LEVEL	0.268	0.700					
MAIN EFFECT - INDEPENDENT VARIABLE:							
PPGOAL	0.336 **	0.104	0.169	0.082	11.595 **	0.252	0.135 **
MAIN EFFECTS - MODERATOR VARIABLES (GROUPED EFFECTS):							
PERSONALITY VARIABLES:			0.175	0.006	9.027 **	0.266	0.014 **
LOCCONT	-0.025	0.104					
NEEDIND	-0.164 @	0.087					
AUTHORM	0.070	0.100					
MANAGERIAL CONTROL SYSTEM VARIABLES:			0.278	0.109	15.166 **	0.392	0.140 **
NPERCATT	0.261 *	0.097					
NPERCEVF	0.465 **	0.082					
PEROLAP	0.183 @	0.109					
PERFEED	0.191 @	0.098					
MANAGERIAL COMMITMENT COMBINED VARIABLE:							
PERMCOP	0.329 **	0.035	0.294	0.125	21.362 **	0.358	0.106 **
MODERATOR EFFECTS - INTERACTION TERMS (GROUPED EFFECTS):							
PERSONALITY VARIABLES:			0.186	0.011	7.747 **	0.276	0.010 **
PPGOAL X LOCCONT	-0.030 #	0.014					
PPGOAL X NEEDIND	0.012	0.011					
PPGOAL X AUTHORM	0.016	0.014					
(Significance test - Moderator effect:)					2.343 @		
MANAGERIAL CONTROL SYSTEM VARIABLES:			0.296	0.018	12.506 **	0.407	0.015 **
PPGOAL X NPERCATT	0.023 @	0.013					
PPGOAL X NPERCEVF	0.019 #	0.009					
PPGOAL X PEROLAP	-0.023	0.016					
PPGOAL X PERFEED	-0.009	0.013					
(Significance test - Moderator effect:)					3.066 #		
MANAGERIAL COMMITMENT COMBINED VARIABLE:							
PPGOAL X PERMCOP	0.007 @	0.004	0.299	0.005	19.870 **	0.360	0.002 **
(Significance test - Moderator effect:)					3.792 @		

APPENDIX D-2A

MODERATED MULTIPLE REGRESSION ANALYSIS REPORT
DEPENDENT VARIABLE : JOBSAT; JOB SATISFACTION
INDEPENDENT VARIABLE : PPGOAL; PERCEIVED EXTENT OF PARTICIPATION IN WORK-GOAL OR BUDGET SETTING
HIERARCHY LEVEL : MANAGEMENT WORK SITES : ALL

** = p < 0.001
* = p < 0.01
# = p < 0.05
@ = p < 0.10

			FIRST SURVEY RESULTS: (n = 46)			SECOND SURVEY: (n = 44)	
VARIABLE	BETA	STD ERROR	R.SQ.	CHANGE IN R.SQ.	F-VALUE	R.SQ.	CHANGE IN R.SQ.
BIOGRAPHICAL:			0.454	0.454	4.519 **	0.188	0.188
MARR	4.335	4.398					
AGE	0.270 #	0.122					
LANG	2.890 #	1.328					
EDUC	2.813 #	1.176					
SITU	-1.597	2.053					
COURSE	0.787	1.791					
YEARS	0.256 #	0.112					
MAIN EFFECT - INDEPENDENT VARIABLE:							
PPGOAL	0.180	0.147	0.476	0.022	4.194 *	0.544	0.356 **
MAIN EFFECTS - MODERATOR VARIABLES (GROUPED EFFECTS):							
PERSONALITY VARIABLES:			0.497	0.021	3.053 *	0.626	0.082 **
LOCCONT	-0.199	0.367					
NEEDIND	-0.304	0.280					
AUTHORM	0.052	0.253					
MANAGERIAL CONTROL SYSTEM VARIABLES:			0.536	0.060	3.180 *	0.719	0.175 **
NPERCATT	-0.391	0.323					
NPERCEVF	0.564	0.395					
PEROLAP	0.271	0.351					
PERFEED	-0.491	0.348					
MANAGERIAL COMMITMENT COMBINED VARIABLE:							
PERMCOP	0.101	0.153	0.482	0.006	3.720 *	0.622	0.078 **
MODERATOR EFFECTS - INTERACTION TERMS (GROUPED EFFECTS):							
PERSONALITY VARIABLES:			0.504	0.007	2.252 #	0.646	0.020 *
PPGOAL X LOCCONT	-0.012	0.065					
PPGOAL X NEEDIND	0.028	0.068					
PPGOAL X AUTHORM	-0.012	0.051					
(Significance test - Moderator effect:)					0.152		
MANAGERIAL CONTROL SYSTEM VARIABLES:			0.580	0.044	2.504 #	0.722	0.003 **
PPGOAL X NPERCATT	-0.073	0.071					
PPGOAL X NPERCEVF	-0.090	0.078					
PPGOAL X PEROLAP	0.104	0.082					
PPGOAL X PERFEED	0.040	0.067					
(Significance test - Moderator effect:)					0.758		
MANAGERIAL COMMITMENT COMBINED VARIABLE:							
PPGOAL X PERMCOP	-0.036 #	0.017	0.541	0.059	4.122 **	0.643	0.021 **
(Significance test - Moderator effect:)					4.492 #		

APPENDIX D-2B

MODERATED MULTIPLE REGRESSION ANALYSIS REPORT
DEPENDENT VARIABLE : JOBSAT; JOB SATISFACTION
INDEPENDENT VARIABLE : PPGOAL; PERCEIVED EXTENT OF PARTICIPATION IN WORK-GOAL OR BUDGET SETTING
HIERARCHY LEVEL : CATEGORY A WORK SITES : ALL

** = p < 0.001
* = p < 0.01
# = p < 0.05
@ = p < 0.10

FIRST SURVEY RESULTS: (n = 58)						SECOND SURVEY: (n = 40)	
VARIABLE	BETA	STD ERROR	R.SQ.	CHANGE IN R.SQ.	F-VALUE	R.SQ.	CHANGE IN R.SQ.
BIOGRAPHICAL:			0.198	0.198	1.764	0.256	0.256
MARR	3.032	3.030					
AGE	0.057	0.160					
LANG	-1.394	1.090					
EDUC	-2.208	1.970					
SITU	-0.120	2.324					
COURSE	1.273	2.375					
YEARS	0.430	0.272					
MAIN EFFECT - INDEPENDENT VARIABLE:							
PPGOAL	0.603 **	0.147	0.404	0.206	4.145 **	0.439	0.183 #
MAIN EFFECTS - MODERATOR VARIABLES (GROUPED EFFECTS):							
PERSONALITY VARIABLES:			0.442	0.038	3.312 *	0.530	0.091 #
LOCCONT	0.317	0.404					
NEEDIND	-0.066	0.306					
AUTHORM	0.486	0.321					
MANAGERIAL CONTROL SYSTEM VARIABLES:			0.555	0.151	4.685 **	0.481	0.042 @
NPERCATT	0.091	0.386					
NPERCEVF	0.460 @	0.243					
PEROLAP	0.627	0.375					
PERFEED	0.359	0.315					
MANAGERIAL COMMITMENT COMBINED VARIABLE:							
PERMCOP	0.214 @	0.125	0.438	0.034	4.154 **	0.468	0.029 #
MODERATOR EFFECTS - INTERACTION TERMS (GROUPED EFFECTS):							
PERSONALITY VARIABLES:			0.549	0.107	3.737 **	0.593	0.063 #
PPGOAL X LOCCONT	0.045 *	0.050					
PPGOAL X NEEDIND	-0.104	0.037					
PPGOAL X AUTHORM	-0.139 #	0.052					
(Significance test - Moderator effect:)					3.398 #		
MANAGERIAL CONTROL SYSTEM VARIABLES:			0.609	0.054	3.995 **	0.493	0.012
PPGOAL X NPERCATT	0.028	0.045					
PPGOAL X NPERCEVF	0.001	0.027					
PPGOAL X PEROLAP	-0.134 #	0.058					
PPGOAL X PERFEED	0.039	0.043					
(Significance test - Moderator effect:)					1.411		
MANAGERIAL COMMITMENT COMBINED VARIABLE:							
PPGOAL X PERMCOP	-0.007	0.012	0.442	0.004	3.719 **	0.468	0.000 #
(Significance test - Moderator effect:)					0.331		

APPENDIX D-2C

MODERATED MULTIPLE REGRESSION ANALYSIS REPORT
DEPENDENT VARIABLE : JOBSAT; JOB SATISFACTION
INDEPENDENT VARIABLE : PPGOAL; PERCEIVED EXTENT OF PARTICIPATION IN WORK-GOAL OR BUDGET SETTING
HIERARCHY LEVEL : CATEGORY B WORK SITES : ALL

** = p < 0.001
* = p < 0.01
# = p < 0.05
@ = p < 0.10

	FIRST SURVEY RESULTS: (n = 421)					SECOND SURVEY: (n = 150)	
VARIABLE	BETA	STD ERROR	CHANGE R.SQ.	CHANGE IN R.SQ.	F-VALUE	CHANGE R.SQ.	CHANGE IN R.SQ.
BIOGRAPHICAL:			0.057	0.057	3.538 **	0.072	0.072
MARR	-3.001 #	1.294					
AGE	0.115 #	0.056					
LANG	-0.189	0.237					
EDUC	-0.248	0.397					
SITU	-1.750 #	0.830					
COURSE	1.626 #	0.803					
YEARS	0.094	0.068					
MAIN EFFECT - INDEPENDENT VARIABLE:							
PPGOAL	0.300 **	0.053	0.124	0.067	7.273 **	0.198	0.126 **
MAIN EFFECTS - MODERATOR VARIABLES (GROUPED EFFECTS):							
PERSONALITY VARIABLES:			0.131	0.007	5.612 **	0.201	0.003 **
LOCCONT	0.013	0.115					
NEEDIND	-0.178 @	0.098					
AUTHORM	-0.014	0.115					
MANAGERIAL CONTROL SYSTEM VARIABLES:			0.242	0.118	10.865 **	0.370	0.172 **
NPERCATT	0.289 *	0.108					
NPERCEVF	0.451 **	0.092					
PEROLAP	0.174	0.125					
PERFEED	0.254 #	0.112					
MANAGERIAL COMMITMENT COMBINED VARIABLE:							
PERMCOP	0.335 **	0.038	0.264	0.140	16.391 **	0.327	0.129 **
MODERATOR EFFECTS - INTERACTION TERMS (GROUPED EFFECTS):							
PERSONALITY VARIABLES:			0.147	0.016	5.000 **	0.217	0.016 *
PPGOAL X LOCCONT	-0.034 #	0.015					
PPGOAL X NEEDIND	0.012	0.013					
PPGOAL X AUTHORM	0.020	0.015					
(Significance test - Moderator effect:)					2.525 @		
MANAGERIAL CONTROL SYSTEM VARIABLES:			0.264	0.022	9.060 **	0.425	0.055 **
PPGOAL X NPERCATT	0.025 @	0.015					
PPGOAL X NPERCEVF	0.024 #	0.010					
PPGOAL X PEROLAP	-0.017	0.017					
PPGOAL X PERFEED	-0.016	0.014					
(Significance test - Moderator effect:)					3.006 #		#
MANAGERIAL COMMITMENT COMBINED VARIABLE:							
PPGOAL X PERMCOP	0.010 #	0.004	0.274	0.010	15.475 **	0.329	0.002 **
(Significance test - Moderator effect:)					5.583 #		

APPENDIX D-2D

MODERATED MULTIPLE REGRESSION ANALYSIS REPORT
DEPENDENT VARIABLE : JOBSAT; JOB SATISFACTION
INDEPENDENT VARIABLE : PPGOAL; PERCEIVED EXTENT OF PARTICIPATION IN WORK-GOAL OR BUDGET SETTING

** = p < 0.001
* = p < 0.01
# = p < 0.05
@ = p < 0.10

HIERARCHY LEVEL : ALL WORK SITES : ABOVE GROUND

FIRST SURVEY RESULTS: (n = 225)						SECOND SURVEY: (n = 96)	
		STD	CHANGE				CHANGE
VARIABLE	BETA	ERROR	R.SQ.	IN R.SQ.	F-VALUE	R.SQ.	IN R.SQ.
BIOGRAPHICAL:			0.046	0.046	1.481	0.145	0.145 @
MARR	-0.892	1.489					
AGE	0.076	0.074					
LANG	-0.228	0.363					
EDUC	-0.614	0.503					
COURSE	1.076	1.078					
YEARS	0.036	0.086					
LEVEL	1.285	0.977					
MAIN EFFECT - INDEPENDENT VARIABLE:							
PPGOAL	0.370 **	0.066	0.168	0.122	5.423 **	0.343	0.198 **
MAIN EFFECTS - MODERATOR VARIABLES (GROUPED EFFECTS):							
PERSONALITY VARIABLES:			0.181	0.013	4.251 **	0.391	0.048 **
LOCCONT	0.034	0.166					
NEEDIND	-0.179	0.124					
AUTHORM	0.194	0.148					
MANAGERIAL CONTROL SYSTEM VARIABLES:			0.276	0.108	6.690 **	0.520	0.177 **
NPERCATT	0.039	0.155					
NPERCEVF	0.429 **	0.121					
PEROLAP	0.290 @	0.150					
PERFEED	0.166	0.154					
MANAGERIAL COMMITMENT COMBINED VARIABLE:							
PERMCOP	0.247 **	0.055	0.239	0.071	7.454 **	0.453	0.110 **
MODERATOR EFFECTS - INTERACTION TERMS (GROUPED EFFECTS):							
PERSONALITY VARIABLES:			0.184	0.003	3.354 **	0.427	0.036 **
PPGOAL X LOCCONT	0.002	0.021					
PPGOAL X NEEDIND	0.013	0.015					
PPGOAL X AUTHORM	0.001	0.020					
(Significance test - Moderator effect:)					0.234		
MANAGERIAL CONTROL SYSTEM VARIABLES:			0.305	0.029	5.675 **	0.551	0.031 **
PPGOAL X NPERCATT	-0.009	0.023					
PPGOAL X NPERCEVF	0.007	0.013					
PPGOAL X PEROLAP	-0.061 *	0.021					
PPGOAL X PERFEED	0.019	0.019					
(Significance test - Moderator effect:)					2.180 @		
MANAGERIAL COMMITMENT COMBINED VARIABLE:							
PPGOAL X PERMCOP	0.001	0.005	0.239	0.000	6.679 **	0.469	0.016 **
(Significance test - Moderator effect:)					0.016		

APPENDIX D-2E

MODERATED MULTIPLE REGRESSION ANALYSIS REPORT
DEPENDENT VARIABLE : JOBSAT; JOB SATISFACTION
INDEPENDENT VARIABLE : PPGOAL; PERCEIVED EXTENT OF PARTICIPATION IN WORK-GOAL OR BUDGET SETTING
HIERARCHY LEVEL : ALL WORK SITES : BELOW GROUND

** = p < 0.001
* = p < 0.01
# = p < 0.05
@ = p < 0.10

FIRST SURVEY RESULTS: (n = 300)						SECOND SURVEY: (n = 138)	
VARIABLE	BETA	STD ERROR	R.SQ.	CHANGE IN R.SQ.	F-VALUE	R.SQ.	CHANGE IN R.SQ.
BIOGRAPHICAL:			0.122	0.122	5.773 **	0.084	0.084 @
MARR	-4.428 #	1.745					
AGE	0.192 *	0.065					
LANG	-0.534 #	0.270					
EDUC	0.944 @	0.520					
COURSE	2.326 #	0.935					
YEARS	0.246 *	0.081					
LEVEL	-1.554	1.100					
MAIN EFFECT - INDEPENDENT VARIABLE:							
PPGOAL	0.296 **	0.067	0.177	0.055	7.799 **	0.172	0.088 *
MAIN EFFECTS - MODERATOR VARIABLES (GROUPED EFFECTS):							
PERSONALITY VARIABLES:			0.177	0.000	5.477 **	0.190	0.018 *
LOCCONT	-0.019	0.137					
NEEDIND	-0.133	0.126					
AUTHORM	0.010	0.140					
MANAGERIAL CONTROL SYSTEM VARIABLES:			0.301	0.124	10.327 **	0.279	0.107 *
NPERCATT	0.475 **	0.128					
NPERCEVF	0.532 **	0.117					
PEROLAP	0.002	0.163					
PERFEED	0.209	0.129					
MANAGERIAL COMMITMENT COMBINED VARIABLE:							
PERMCOP	0.377 **	0.044	0.337	0.160	16.435 **	0.266	0.094 **
MODERATOR EFFECTS - INTERACTION TERMS (GROUPED EFFECTS):							
PERSONALITY VARIABLES:			0.200	0.023	5.101 **	0.213	0.023 *
PPGOAL X LOCCONT	-0.050 *	0.018					
PPGOAL X NEEDIND	0.009	0.018					
PPGOAL X AUTHORM	0.031	0.019					
(Significance test - Moderator effect:)					3.252 #		
MANAGERIAL CONTROL SYSTEM VARIABLES:			0.338	0.037	9.071 **	0.302	0.023 **
PPGOAL X NPERCATT	0.038 #	0.018					
PPGOAL X NPERCEVF	0.028 #	0.013					
PPGOAL X PEROLAP	0.017	0.024					
PPGOAL X PERFEED	-0.028	0.018					
(Significance test - Moderator effect:)					4.008 *		
MANAGERIAL COMMITMENT COMBINED VARIABLE:							
PPGOAL X PERMCOP	0.013 #	0.005	0.351	0.014	15.698 **	0.291	0.025 **
(Significance test - Moderator effect:)					6.349 #		#

APPENDIX D-3

MODERATED MULTIPLE REGRESSION ANALYSIS REPORT
DEPENDENT VARIABLE : JOBSAT; JOB SATISFACTION
INDEPENDENT VARIABLE : PPSAFE; PERCEIVED EXTENT OF PARTICIPATION IN SAFETY-RELATED DECISION-MAKING
HIERARCHY LEVEL : ALL WORK SITES : ALL

** = p < 0.001
* = p < 0.01
# = p < 0.05
@ = p < 0.10

	FIRST SURVEY RESULTS: (n = 525)					SECOND SURVEY: (n = 234)	
VARIABLE	BETA	STD ERROR	R.SQ.	CHANGE IN R.SQ.	F-VALUE	R.SQ.	CHANGE IN R.SQ.
BIOGRAPHICAL:			0.087	0.087	6.149 **	0.117	0.117 **
MARR	-2.200 #	1.123					
AGE	0.141 *	0.049					
LANG	-0.400 @	0.215					
EDUC	0.088	0.361					
SITU	-1.656 #	0.729					
COURSE	1.648 #	0.706					
YEARS	0.122 #	0.058					
LEVEL	0.268	0.700					
MAIN EFFECT - INDEPENDENT VARIABLE:							
PPSAFE	0.724 **	0.097	0.176	0.089	12.179 **	0.224	0.107 **
MAIN EFFECTS - MODERATOR VARIABLES (GROUPED EFFECTS):							
PERSONALITY VARIABLES:			0.183	0.007	9.568 **	0.227	0.003 **
LOCCONT	-0.036	0.104					
NEEDIND	-0.180 #	0.087					
AUTHORM	0.086	0.099					
MANAGERIAL CONTROL SYSTEM VARIABLES:			0.289	0.113	15.987 **	0.378	0.154 **
NPERCATT	0.251 *	0.097					
NPERCEVF	0.437 **	0.080					
PEROLAP	0.167	0.109					
PERFEED	0.212 #	0.096					
MANAGERIAL COMMITMENT COMBINED VARIABLE:							
PERMCOP	0.312 **	0.033	0.298	0.122	21.829 **	0.357	0.133 **
MODERATOR EFFECTS - INTERACTION TERMS (GROUPED EFFECTS):							
PERSONALITY VARIABLES:			0.190	0.007	7.960 **	0.234	0.007 **
PPSAFE X LOCCONT	-0.023	0.030					
PPSAFE X NEEDIND	0.047 @	0.025					
PPSAFE X AUTHORM	-0.012	0.029					
(Significance test - Moderator effect:)					1.431		
MANAGERIAL CONTROL SYSTEM VARIABLES:			0.315	0.026	13.737 **	0.405	0.027 **
PPSAFE X NPERCATT	0.074 *	0.028					
PPSAFE X NPERCEVF	0.024	0.019					
PPSAFE X PEROLAP	-0.087 *	0.030					
PPSAFE X PERFEED	0.016	0.027					
(Significance test - Moderator effect:)					4.856 **		#
MANAGERIAL COMMITMENT COMBINED VARIABLE:							
PPSAFE X PERMCOP	0.014 #	0.007	0.304	0.006	20.348 **	0.357	0.000 **
(Significance test - Moderator effect:)					4.180 #		

APPENDIX D-3A

MODERATED MULTIPLE REGRESSION ANALYSIS REPORT
DEPENDENT VARIABLE : JOBSAT; JOB SATISFACTION
INDEPENDENT VARIABLE : PPSAFE; PERCEIVED EXTENT OF PARTICIPATION IN SAFETY-RELATED DECISION-MAKING
HIERARCHY LEVEL : MANAGEMENT WORK SITES : ALL

** = p < 0.001
* = p < 0.01
# = p < 0.05
@ = p < 0.10

FIRST SURVEY RESULTS: (n = 46)						SECOND SURVEY: (n = 44)	
VARIABLE	BETA	STD ERROR	R.SQ.	CHANGE IN R.SQ.	F-VALUE	R.SQ.	CHANGE IN R.SQ.
BIOGRAPHICAL:			0.454	0.454	4.519 **	0.188	0.188
MARR	4.335	4.399					
AGE	0.270 #	0.122					
LANG	2.890 #	1.328					
EDUC	2.814 #	1.176					
SITU	-1.597	2.053					
COURSE	0.787	1.791					
YEARS	0.256 #	0.112					
MAIN EFFECT - INDEPENDENT VARIABLE:							
PPSAFE	0.164	0.265	0.460	0.006	3.938 *	0.417	0.229 *
MAIN EFFECTS - MODERATOR VARIABLES (GROUPED EFFECTS):							
PERSONALITY VARIABLES:			0.480	0.020	2.854 *	0.460	0.043 #
LOCCONT	-0.195	0.381					
NEEDIND	-0.303	0.300					
AUTHORM	0.052	0.259					
MANAGERIAL CONTROL SYSTEM VARIABLES:			0.537	0.077	3.192 *	0.701	0.284 **
NPERCATT	-0.418	0.326					
NPERCEVF	0.582	0.380					
PEROLAP	0.280	0.327					
PERFEED	-0.501	0.348					
MANAGERIAL COMMITMENT COMBINED VARIABLE:							
PERMCOP	0.143	0.150	0.473	0.013	3.593 *	0.617	0.200 **
MODERATOR EFFECTS - INTERACTION TERMS (GROUPED EFFECTS):							
PERSONALITY VARIABLES:			0.512	0.032	2.323 #	0.486	0.026 #
PPSAFE X LOCCONT	0.093	0.175					
PPSAFE X NEEDIND	0.114	0.119					
PPSAFE X AUTHORM	0.181	0.142					
(Significance test - Moderator effect:)					0.676		
MANAGERIAL CONTROL SYSTEM VARIABLES:			0.547	0.010	2.187 #	0.721	0.020 **
PPSAFE X NPERCATT	0.060	0.126					
PPSAFE X NPERCEVF	-0.007	0.152					
PPSAFE X PEROLAP	0.080	0.154					
PPSAFE X PERFEED	0.052	0.114					
(Significance test - Moderator effect:)					0.153		
MANAGERIAL COMMITMENT COMBINED VARIABLE:							
PPSAFE X PERMCOP	-0.062 @	0.031	0.526	0.053	3.885 *	0.623	0.006 **
(Significance test - Moderator effect:)					3.900 @		

APPENDIX D-3B

MODERATED MULTIPLE REGRESSION ANALYSIS REPORT
DEPENDENT VARIABLE : JOBSAT; JOB SATISFACTION
INDEPENDENT VARIABLE : PPSAFE; PERCEIVED EXTENT OF PARTICIPATION IN SAFETY-RELATED DECISION-MAKING
HIERARCHY LEVEL : CATEGORY A WORK SITES : ALL

** = p < 0.001
* = p < 0.01
# = p < 0.05
@ = p < 0.10

	FIRST SURVEY RESULTS: (n = 58)					SECOND SURVEY: (n = 40)	
VARIABLE	BETA	STD ERROR	R.SQ.	CHANGE IN R.SQ.	F-VALUE	R.SQ.	CHANGE IN R.SQ.
BIOGRAPHICAL:			0.198	0.198	1.764	0.256	0.256
MARR	3.032	3.030					
AGE	0.057	0.160					
LANG	-1.394	1.090					
EDUC	-2.208	1.970					
SITU	-0.120	2.324					
COURSE	1.273	2.375					
YEARS	0.430	0.273					
MAIN EFFECT - INDEPENDENT VARIABLE:							
PPSAFE	0.569	0.380	0.233	0.035	1.863	0.417	0.161 #
MAIN EFFECTS - MODERATOR VARIABLES (GROUPED EFFECTS):							
PERSONALITY VARIABLES:			0.299	0.066	1.780 @	0.490	0.073 #
LOCCONT	0.135	0.461					
NEEDIND	-0.273	0.336					
AUTHORM	0.654 @	0.356					
MANAGERIAL CONTROL SYSTEM VARIABLES:			0.545	0.312	4.499 **	0.487	0.070 #
NPERCATT	0.105	0.390					
NPERCEVF	0.620 *	0.213					
PEROLAP	0.690 @	0.379					
PERFEED	0.408	0.321					
MANAGERIAL COMMITMENT COMBINED VARIABLE:							
PERMCOP	0.414 **	0.111	0.407	0.174	3.655 *	0.468	0.051 #
MODERATOR EFFECTS - INTERACTION TERMS (GROUPED EFFECTS):							
PERSONALITY VARIABLES:			0.441	0.142	2.423 #	0.502	0.012 @
PPSAFE X LOCCONT	-0.052	0.158					
PPSAFE X NEEDIND	-0.139	0.119					
PPSAFE X AUTHORM	-0.446 *	0.146					
(Significance test - Moderator effect:)					3.654 #		
MANAGERIAL CONTROL SYSTEM VARIABLES:			0.592	0.047	3.715 **	0.501	0.014
PPSAFE X NPERCATT	0.090	0.122					
PPSAFE X NPERCEVF	-0.076	0.064					
PPSAFE X PEROLAP	0.142	0.126					
PPSAFE X PERFEED	0.019	0.095					
(Significance test - Moderator effect:)					1.164		
MANAGERIAL COMMITMENT COMBINED VARIABLE:							
PPSAFE X PERMCOP	-0.008	0.024	0.408	0.001	3.241 *	0.470	0.002 #
(Significance test - Moderator effect:)					0.117		

APPENDIX D-3C

MODERATED MULTIPLE REGRESSION ANALYSIS REPORT
DEPENDENT VARIABLE : JOBSAT; JOB SATISFACTION
INDEPENDENT VARIABLE : PPSAFE; PERCEIVED EXTENT OF PARTICIPATION IN SAFETY-RELATED DECISION-MAKING
HIERARCHY LEVEL : CATEGORY B WORK SITES : ALL

** = p < 0.001
* = p < 0.01
# = p < 0.05
@ = p < 0.10

FIRST SURVEY RESULTS: (n = 421)						SECOND SURVEY: (n = 150)	
VARIABLE	BETA	STD ERROR	CHANGE R.SQ.	CHANGE IN R.SQ.	F-VALUE	CHANGE R.SQ.	CHANGE IN R.SQ.
BIOGRAPHICAL:			0.057	0.057	3.538 *	0.072	0.072
MARR	-3.001 #	1.294					
AGE	0.115 #	0.056					
LANG	-0.189	0.237					
EDUC	-0.248	0.398					
SITU	-1.750 #	0.830					
COURSE	1.626 #	0.803					
YEARS	0.094	0.068					
MAIN EFFECT - INDEPENDENT VARIABLE:							
PPSAFE	0.757 **	0.106	0.160	0.103	9.795 **	0.159	0.087 *
MAIN EFFECTS - MODERATOR VARIABLES (GROUPED EFFECTS):							
PERSONALITY VARIABLES:			0.168	0.008	7.522 **	0.166	0.007 *
LOCCONT	-0.015	0.112					
NEEDIND	-0.190 #	0.095					
AUTHORM	-0.005	0.111					
MANAGERIAL CONTROL SYSTEM VARIABLES:			0.262	0.102	37.000 **	0.344	0.185 **
NPERCATT	0.270 #	0.106					
NPERCEVF	0.378 **	0.091					
PEROLAP	0.146	0.124					
PERFEED	0.266 #	0.109					
MANAGERIAL COMMITMENT COMBINED VARIABLE:							
PERMCOP	0.292 **	0.036	0.274	0.114	17.209 **	0.326	0.167 **
MODERATOR EFFECTS - INTERACTION TERMS (GROUPED EFFECTS):							
PERSONALITY VARIABLES:			0.181	0.013	6.390 **	0.180	0.014 #
PPSAFE X LOCCONT	-0.025	0.032					
PPSAFE X NEEDIND	0.061 #	0.027					
PPSAFE X AUTHORM	-0.001	0.031					
(Significance test - Moderator effect:)					2.030		
MANAGERIAL CONTROL SYSTEM VARIABLES:			0.301	0.039	10.895 **	0.420	0.076 **
PPSAFE X NPERCATT	0.078 #	0.030					
PPSAFE X NPERCEVF	0.045 #	0.021					
PPSAFE X PEROLAP	-0.103 *	0.033					
PPSAFE X PERFEED	0.002	0.030					
(Significance test - Moderator effect:)					5.778 **		*
MANAGERIAL COMMITMENT COMBINED VARIABLE:							
PPSAFE X PERMCOP	0.020 #	0.008	0.285	0.011	16.346 **	0.327	0.001 **
(Significance test - Moderator effect:)					6.505 #		

APPENDIX D-3D

MODERATED MULTIPLE REGRESSION ANALYSIS REPORT
DEPENDENT VARIABLE : JOBSAT; JOB SATISFACTION
INDEPENDENT VARIABLE : PPSAFE; PERCEIVED EXTENT OF PARTICIPATION IN SAFETY-RELATED DECISION-MAKING
HIERARCHY LEVEL : ALL WORK SITES : ABOVE GROUND

** = p < 0.001
* = p < 0.01
# = p < 0.05
@ = p < 0.10

	FIRST SURVEY RESULTS: (n = 225)					SECOND SURVEY: (n = 96)	
VARIABLE	BETA	STD ERROR	CHANGE R.SQ.	IN R.SQ.	F-VALUE	CHANGE R.SQ.	IN R.SQ.
BIOGRAPHICAL:			0.046	0.046	1.481	0.145	0.145 @
MARR	-0.891	1.489					
AGE	0.076	0.074					
LANG	-0.228	0.364					
EDUC	-0.614	0.503					
COURSE	1.076	1.078					
YEARS	0.036	0.086					
LEVEL	1.285	0.977					
MAIN EFFECT - INDEPENDENT VARIABLE:							
PPSAFE	0.704 **	0.148	0.137	0.091	4.270 **	0.315	0.170 **
MAIN EFFECTS - MODERATOR VARIABLES (GROUPED EFFECTS):							
PERSONALITY VARIABLES:			0.155	0.018	3.547 **	0.344	0.029 **
LOCCONT	-0.010	0.169					
NEEDIND	-0.236 @	0.125					
AUTHORM	0.199	0.150					
MANAGERIAL CONTROL SYSTEM VARIABLES:			0.279	0.142	6.801 **	0.514	0.199 **
NPERCATT	0.024	0.153					
NPERCEVF	0.444 **	0.119					
PEROLAP	0.304 #	0.148					
PERFEED	0.199	0.151					
MANAGERIAL COMMITMENT COMBINED VARIABLE:							
PERMCOP	0.270 **	0.052	0.234	0.097	7.255 **	0.449	0.134 **
MODERATOR EFFECTS - INTERACTION TERMS (GROUPED EFFECTS):							
PERSONALITY VARIABLES:			0.158	0.003	2.797 **	0.381	0.037 **
PPSAFE X LOCCONT	-0.024	0.049					
PPSAFE X NEEDIND	0.016	0.037					
PPSAFE X AUTHORM	-0.017	0.045					
(Significance test - Moderator effect:)					0.197		1.519
MANAGERIAL CONTROL SYSTEM VARIABLES:			0.311	0.032	5.847 **	0.541	0.027 **
PPSAFE X NPERCATT	-0.034	0.046					
PPSAFE X NPERCEVF	-0.025	0.029					
PPSAFE X PEROLAP	-0.123 *	0.044					
PPSAFE X PERFEED	0.080 #	0.040					
(Significance test - Moderator effect:)					2.432 #		1.081
MANAGERIAL COMMITMENT COMBINED VARIABLE:							
PPSAFE X PERMCOP	-0.005	0.011	0.235	0.001	6.534 **	0.461	0.012 **
(Significance test - Moderator effect:)					0.269		1.901

APPENDIX D-3E

MODERATED MULTIPLE REGRESSION ANALYSIS REPORT — ** = p < 0.001
DEPENDENT VARIABLE : JOBSAT; JOB SATISFACTION — * = p < 0.01
INDEPENDENT VARIABLE : PPSAFE; PERCEIVED EXTENT OF PARTICIPATION IN SAFETY-RELATED DECISION-MAKING — # = p < 0.05, @ = p < 0.10
HIERARCHY LEVEL : ALL — WORK SITES : BELOW GROUND

FIRST SURVEY RESULTS: (n = 300)						SECOND SURVEY: (n = 138)	
VARIABLE	BETA	STD ERROR	R.SQ.	CHANGE IN R.SQ.	F-VALUE	R.SQ.	CHANGE IN R.SQ.
BIOGRAPHICAL:			0.122	0.122	5.773 **	0.084	0.084 @
MARR	-4.428 #	1.745					
AGE	0.192 *	0.065					
LANG	-0.534 #	0.270					
EDUC	0.944 @	0.520					
COURSE	2.326 #	0.935					
YEARS	0.246 *	0.081					
LEVEL	-1.554	1.100					
MAIN EFFECT - INDEPENDENT VARIABLE:							
PPSAFE	0.690 **	0.131	0.198	0.076	8.976 **	0.160	0.076 *
MAIN EFFECTS - MODERATOR VARIABLES (GROUPED EFFECTS):							
PERSONALITY VARIABLES:			0.199	0.001	6.514 **	0.169	0.009 *
LOCCONT	-0.023	0.134					
NEEDIND	-0.130	0.124					
AUTHORM	-0.037	0.136					
MANAGERIAL CONTROL SYSTEM VARIABLES:			0.309	0.111	10.751 **	0.269	0.109 **
NPERCATT	0.448 **	0.128					
NPERCEVF	0.442 **	0.113					
PEROLAP	0.009	0.161					
PERFEED	0.222 @	0.128					
MANAGERIAL COMMITMENT COMBINED VARIABLE:							
PERMCOP	0.339 **	0.043	0.339	0.141	16.593 **	0.267	0.107 **
MODERATOR EFFECTS - INTERACTION TERMS (GROUPED EFFECTS):							
PERSONALITY VARIABLES:			0.213	0.014	5.523 **	0.193	0.024 #
PPSAFE X LOCCONT	-0.035	0.040					
PPSAFE X NEEDIND	0.074 #	0.035					
PPSAFE X AUTHORM	-0.002	0.039					
(Significance test - Moderator effect:)					1.712		
MANAGERIAL CONTROL SYSTEM VARIABLES:			0.361	0.052	10.037 **	0.300	0.031 **
PPSAFE X NPERCATT	0.112 *	0.037					
PPSAFE X NPERCEVF	0.063 #	0.028					
PPSAFE X PEROLAP	-0.078 @	0.044					
PPSAFE X PERFEED	-0.042	0.040					
(Significance test - Moderator effect:)					5.762 **		
MANAGERIAL COMMITMENT COMBINED VARIABLE:							
PPSAFE X PERMCOP	0.030 *	0.010	0.361	0.022	16.368 **	0.272	0.005 **
(Significance test - Moderator effect:)					9.819 *		

APPENDIX D-4

MODERATED MULTIPLE REGRESSION ANALYSIS REPORT
DEPENDENT VARIABLE : JOBSAT; JOB SATISFACTION
INDEPENDENT VARIABLE : PPAGWD; PERCEIVED EXTENT OF PARTICIPATION IN GENERAL WORK-RELATED DECISION-MAKING
HIERARCHY LEVEL : ALL WORK SITES : ALL

** = p < 0.001
* = p < 0.01
# = p < 0.05
@ = p < 0.10

FIRST SURVEY RESULTS: (n = 525)						SECOND SURVEY: (n = 234)	
VARIABLE	BETA	STD ERROR	R.SQ.	CHANGE IN R.SQ.	F-VALUE	R.SQ.	CHANGE IN R.SQ.
BIOGRAPHICAL:			0.087	0.087	6.149 **	0.117	0.117 **
MARR	-2.200 #	1.123					
AGE	0.141 *	0.049					
LANG	-0.400 @	0.215					
EDUC	0.088	0.361					
SITU	-1.656 #	0.729					
COURSE	1.648 #	0.706					
YEARS	0.122 #	0.058					
LEVEL	0.268	0.700					
MAIN EFFECT - INDEPENDENT VARIABLE:							
PPAGWD	0.927 **	0.098	0.223	0.136	16.441 **	0.237	0.120 **
MAIN EFFECTS - MODERATOR VARIABLES (GROUPED EFFECTS):							
PERSONALITY VARIABLES:			0.230	0.007	12.707 **	0.241	0.004 **
LOCCONT	0.009	0.100					
NEEDIND	-0.139 @	0.085					
AUTHORM	0.135	0.095					
MANAGERIAL CONTROL SYSTEM VARIABLES:			0.314	0.091	17.952 **	0.389	0.152 **
NPERCATT	0.233 #	0.095					
NPERCEVF	0.426 **	0.076					
PEROLAP	0.108	0.108					
PERFEED	0.145	0.095					
MANAGERIAL COMMITMENT COMBINED VARIABLE:							
PERMCOP	0.279 **	0.030	0.337	0.114	26.133 **	0.375	0.138 **
MODERATOR EFFECTS - INTERACTION TERMS (GROUPED EFFECTS):							
PERSONALITY VARIABLES:			0.239	0.009	10.676 **	0.250	0.009 **
PPAGWD X LOCCONT	-0.012	0.030					
PPAGWD X NEEDIND	0.039	0.025					
PPAGWD X AUTHORM	0.055 @	0.029					
(Significance test - Moderator effect:)					2.195 @		
MANAGERIAL CONTROL SYSTEM VARIABLES:			0.331	0.017	14.744 **	0.408	0.019 **
PPAGWD X NPERCATT	-0.019	0.029					
PPAGWD X NPERCEVF	0.074 **	0.022					
PPAGWD X PEROLAP	-0.056 @	0.030					
PPAGWD X PERFEED	-0.055 @	0.029					
(Significance test - Moderator effect:)					3.276 #		
MANAGERIAL COMMITMENT COMBINED VARIABLE:							
PPAGWD X PERMCOP	0.009	0.008	0.339	0.002	23.865 **	0.379	0.004 **
(Significance test - Moderator effect:)					1.126		

APPENDIX D-4A

MODERATED MULTIPLE REGRESSION ANALYSIS REPORT
DEPENDENT VARIABLE : JOBSAT; JOB SATISFACTION
INDEPENDENT VARIABLE : PPAGWD; PERCEIVED EXTENT OF PARTICIPATION IN GENERAL WORK-RELATED DECISION-MAKING
HIERARCHY LEVEL : MANAGEMENT WORK SITES : ALL

** = p < 0.001
* = p < 0.01
# = p < 0.05
@ = p < 0.10

	FIRST SURVEY RESULTS: (n = 46)					SECOND SURVEY: (n = 44)	
VARIABLE	BETA	STD ERROR	R.SQ.	CHANGE IN R.SQ.	F-VALUE	R.SQ.	CHANGE IN R.SQ.
BIOGRAPHICAL:			0.454	0.454	4.519 **	0.188	0.188
MARR	4.335	4.399					
AGE	0.270 #	0.122					
LANG	2.890 #	1.328					
EDUC	2.814 #	1.176					
SITU	-1.597	2.053					
COURSE	0.787	1.791					
YEARS	0.256 #	0.112					
MAIN EFFECT - INDEPENDENT VARIABLE:							
PPAGWD	0.376	0.320	0.474	0.020	4.165 *	0.404	0.216 #
MAIN EFFECTS - MODERATOR VARIABLES (GROUPED EFFECTS):							
PERSONALITY VARIABLES:			0.502	0.028	3.120 *	0.504	0.100 *
LOCCONT	-0.373	0.398					
NEEDIND	-0.262	0.283					
AUTHORM	0.096	0.253					
MANAGERIAL CONTROL SYSTEM VARIABLES:			0.538	0.064	3.196 *	0.684	0.280 **
NPERCATT	-0.409	0.315					
NPERCEVF	0.591	0.385					
PEROLAP	0.332	0.386					
PERFEED	-0.522	0.361					
MANAGERIAL COMMITMENT COMBINED VARIABLE:							
PERMCOP	0.157	0.136	0.493	0.019	3.884 *	0.587	0.183 **
MODERATOR EFFECTS - INTERACTION TERMS (GROUPED EFFECTS):							
PERSONALITY VARIABLES:			0.604	0.102	3.370 *	0.528	0.024 #
PPAGWD X LOCCONT	0.224	0.163					
PPAGWD X NEEDIND	0.258 #	0.108					
PPAGWD X AUTHORM	0.068	0.089					
(Significance test - Moderator effect:)					2.636 @		
MANAGERIAL CONTROL SYSTEM VARIABLES:			0.587	0.049	2.579 #	0.711	0.027 **
PPAGWD X NPERCATT	-0.136	0.134					
PPAGWD X NPERCEVF	-0.122	0.142					
PPAGWD X PEROLAP	0.090	0.167					
PPAGWD X PERFEED	0.099	0.193					
(Significance test - Moderator effect:)					0.874		
MANAGERIAL COMMITMENT COMBINED VARIABLE:							
PPAGWD X PERMCOP	-0.080 @	0.044	0.537	0.044	4.056 **	0.589	0.002 **
(Significance test - Moderator effect:)					3.333 @		

APPENDIX D-4B

MODERATED MULTIPLE REGRESSION ANALYSIS REPORT
DEPENDENT VARIABLE : JOBSAT; JOB SATISFACTION
INDEPENDENT VARIABLE : PPAGWD; PERCEIVED EXTENT OF PARTICIPATION IN GENERAL WORK-RELATED DECISION-MAKING
HIERARCHY LEVEL : CATEGORY A WORK SITES : ALL

** = p < 0.001
* = p < 0.01
# = p < 0.05
@ = p < 0.10

	FIRST SURVEY RESULTS: (n = 58)					SECOND SURVEY: (n = 40)	
VARIABLE	BETA	STD ERROR	R.SQ.	CHANGE IN R.SQ.	F-VALUE	R.SQ.	CHANGE IN R.SQ.
BIOGRAPHICAL:			0.198	0.198	1.764	0.256	0.256
MARR	3.032	3.030					
AGE	0.057	0.160					
LANG	-1.394	1.090					
EDUC	-2.208	1.970					
SITU	-0.120	2.324					
COURSE	1.273	2.375					
YEARS	0.430	0.272					
MAIN EFFECT - INDEPENDENT VARIABLE:							
PPAGWD	1.105 **	0.314	0.360	0.162	3.441 *	0.432	0.176 #
MAIN EFFECTS - MODERATOR VARIABLES (GROUPED EFFECTS):							
PERSONALITY VARIABLES:			0.434	0.074	3.200 *	0.510	0.078 #
LOCCONT	0.079	0.397					
NEEDIND	-0.395	0.300					
AUTHORM	0.632 @	0.319					
MANAGERIAL CONTROL SYSTEM VARIABLES:			0.570	0.210	4.970 **	0.501	0.069 #
NPERCATT	0.070	0.380					
NPERCEVF	0.575 *	0.204					
PEROLAP	0.590	0.370					
PERFEED	0.227	0.322					
MANAGERIAL COMMITMENT COMBINED VARIABLE:							
PERMCOP	0.294 *	0.092	0.473	0.113	4.786 **	0.497	0.065 *
MODERATOR EFFECTS - INTERACTION TERMS (GROUPED EFFECTS):							
PERSONALITY VARIABLES:			0.460	0.026	2.612 *	0.581	0.071 #
PPAGWD X LOCCONT	0.094	0.111					
PPAGWD X NEEDIND	-0.076	0.085					
PPAGWD X AUTHORM	-0.092	0.129					
(Significance test - Moderator effect:)					0.690		
MANAGERIAL CONTROL SYSTEM VARIABLES:			0.606	0.036	3.941 **	0.594	0.093 @
PPAGWD X NPERCATT	0.035	0.093					
PPAGWD X NPERCEVF	-0.012	0.073					
PPAGWD X PEROLAP	-0.161	0.116					
PPAGWD X PERFEED	0.047	0.090					
(Significance test - Moderator effect:)					0.938		
MANAGERIAL COMMITMENT COMBINED VARIABLE:							
PPAGWD X PERMCOP	-0.034	0.023	0.496	0.023	4.631 **	0.498	0.001 #
(Significance test - Moderator effect:)					2.180		

APPENDIX D-4C

MODERATED MULTIPLE REGRESSION ANALYSIS REPORT
DEPENDENT VARIABLE : JOBSAT; JOB SATISFACTION
INDEPENDENT VARIABLE : PPAGWD; PERCEIVED EXTENT OF PARTICIPATION IN GENERAL WORK-RELATED DECISION-MAKING
HIERARCHY LEVEL : CATEGORY B WORK SITES : ALL

** = p < 0.001
* = p < 0.01
# = p < 0.05
@ = p < 0.10

FIRST SURVEY RESULTS: (n = 421)						SECOND SURVEY: (n = 150)	
VARIABLE	BETA	STD ERROR	R.SQ.	CHANGE IN R.SQ.	F-VALUE	R.SQ.	CHANGE IN R.SQ.
BIOGRAPHICAL:			0.057	0.057	3.538 *	0.072	0.072
MARR	-3.001 #	1.294					
AGE	0.115 #	0.056					
LANG	-0.189	0.237					
EDUC	-0.248	0.398					
SITU	-1.750 #	0.830					
COURSE	1.626 #	0.803					
YEARS	0.094	0.068					
MAIN EFFECT - INDEPENDENT VARIABLE:							
PPAGWD	0.918 **	0.110	0.193	0.136	12.341 **	0.144	0.072 *
MAIN EFFECTS - MODERATOR VARIABLES (GROUPED EFFECTS):							
PERSONALITY VARIABLES:			0.198	0.005	9.181 **	0.148	0.004 #
LOCCONT	0.049	0.109					
NEEDIND	-0.140	0.094					
AUTHORM	0.047	0.108					
MANAGERIAL CONTROL SYSTEM VARIABLES:			0.280	0.087	13.241 **	0.348	0.204 **
NPERCATT	0.254 #	0.105					
NPERCEVF	0.375 **	0.087					
PEROLAP	0.128	0.122					
PERFEED	0.203 @	0.108					
MANAGERIAL COMMITMENT COMBINED VARIABLE:							
PERMCOP	0.270 **	0.033	0.306	0.113	20.117 **	0.328	0.184 **
MODERATOR EFFECTS - INTERACTION TERMS (GROUPED EFFECTS):							
PERSONALITY VARIABLES:			0.214	0.016	7.883 **	0.158	0.010 #
PPAGWD X LOCCONT	-0.031	0.032					
PPAGWD X NEEDIND	0.051 @	0.028					
PPAGWD X AUTHORM	0.060 @	0.033					
(Significance test - Moderator effect:)					2.705 #		
MANAGERIAL CONTROL SYSTEM VARIABLES:			0.306	0.026	11.132 **	0.376	0.028 **
PPAGWD X NPERCATT	0.012	0.032					
PPAGWD X NPERCEVF	0.084 **	0.024					
PPAGWD X PEROLAP	-0.050	0.035					
PPAGWD X PERFEED	-0.057 @	0.033					
(Significance test - Moderator effect:)					3.737 *		
MANAGERIAL COMMITMENT COMBINED VARIABLE:							
PPAGWD X PERMCOP	0.018 @	0.010	0.312	0.006	18.556 **	0.332	0.004 **
(Significance test - Moderator effect:)					3.432 @		

APPENDIX D-4D

MODERATED MULTIPLE REGRESSION ANALYSIS REPORT
DEPENDENT VARIABLE : JOBSAT; JOB SATISFACTION
INDEPENDENT VARIABLE : PPAGWD; PERCEIVED EXTENT OF PARTICIPATION IN GENERAL WORK-RELATED DECISION-MAKING
HIERARCHY LEVEL : ALL WORK SITES : ABOVE GROUND

** = p < 0.001
* = p < 0.01
# = p < 0.05
@ = p < 0.10

	FIRST SURVEY RESULTS: (n = 225)					SECOND SURVEY: (n = 96)	
VARIABLE	BETA	STD ERROR	R.SQ.	CHANGE IN R.SQ.	F-VALUE	R.SQ.	CHANGE IN R.SQ.
BIOGRAPHICAL:			0.046	0.046	1.481	0.145	0.145 @
MARR	-0.892	1.489					
AGE	0.076	0.074					
LANG	-0.228	0.364					
EDUC	-0.614	0.503					
COURSE	1.076	1.078					
YEARS	0.036	0.086					
LEVEL	1.286	0.977					
MAIN EFFECT - INDEPENDENT VARIABLE:							
PPAGWD	0.899 **	0.138	0.204	0.158	6.880 **	0.303	0.158 **
MAIN EFFECTS - MODERATOR VARIABLES (GROUPED EFFECTS):							
PERSONALITY VARIABLES:			0.228	0.024	5.681 **	0.355	0.052 **
LOCCONT	-0.033	0.161					
NEEDIND	-0.253 #	0.119					
AUTHORM	0.249 @	0.142					
MANAGERIAL CONTROL SYSTEM VARIABLES:			0.309	0.105	7.875 **	0.524	0.221 **
NPERCATT	0.044	0.150					
NPERCEVF	0.427 **	0.116					
PEROLAP	0.254 @	0.146					
PERFEED	0.117	0.151					
MANAGERIAL COMMITMENT COMBINED VARIABLE:							
PERMCOP	0.236 **	0.046	0.291	0.087	9.771 **	0.464	0.161 **
MODERATOR EFFECTS - INTERACTION TERMS (GROUPED EFFECTS):							
PERSONALITY VARIABLES:			0.235	0.007	4.582 **	0.371	0.016 **
PPAGWD X LOCCONT	-0.034	0.049					
PPAGWD X NEEDIND	0.024	0.033					
PPAGWD X AUTHORM	0.038	0.045					
(Significance test - Moderator effect:)					0.656		
MANAGERIAL CONTROL SYSTEM VARIABLES:			0.348	0.039	6.904 **	0.532	0.008 **
PPAGWD X NPERCATT	-0.130 *	0.043					
PPAGWD X NPERCEVF	0.016	0.034					
PPAGWD X PEROLAP	-0.013	0.042					
PPAGWD X PERFEED	-0.036	0.043					
(Significance test - Moderator effect:)					3.064 #		
MANAGERIAL COMMITMENT COMBINED VARIABLE:							
PPAGWD X PERMCOP	-0.026 @	0.013	0.303	0.012	9.268 **	0.464	0.000 **
(Significance test - Moderator effect:)					3.649 @		

APPENDIX D-4E

MODERATED MULTIPLE REGRESSION ANALYSIS REPORT
DEPENDENT VARIABLE : JOBSAT; JOB SATISFACTION
INDEPENDENT VARIABLE : PPAGWD; PERCEIVED EXTENT OF PARTICIPATION IN GENERAL WORK-RELATED DECISION-MAKING
HIERARCHY LEVEL : ALL WORK SITES : BELOW GROUND

** = p < 0.001
* = p < 0.01
# = p < 0.05
@ = p < 0.10

FIRST SURVEY RESULTS: (n = 300)						SECOND SURVEY: (n = 138)	
VARIABLE	BETA	STD ERROR	R.SQ.	CHANGE IN R.SQ.	F-VALUE	R.SQ.	CHANGE IN R.SQ.
BIOGRAPHICAL:			0.122	0.122	5.773 **	0.084	0.084 @
MARR	-4.428 #	1.745					
AGE	0.192 *	0.065					
LANG	-0.534 #	0.270					
EDUC	0.944 @	0.520					
COURSE	2.326 #	0.935					
YEARS	0.246 *	0.081					
LEVEL	-1.554	1.100					
MAIN EFFECT - INDEPENDENT VARIABLE:							
PPAGWD	0.940 **	0.139	0.242	0.120	11.581 **	0.186	0.102 **
MAIN EFFECTS - MODERATOR VARIABLES (GROUPED EFFECTS):							
PERSONALITY VARIABLES:			0.242	0.000	8.202 **	0.197	0.011 *
LOCCONT	0.047	0.129					
NEEDIND	-0.032	0.122					
AUTHORM	0.076	0.132					
MANAGERIAL CONTROL SYSTEM VARIABLES:			0.327	0.085	11.656 **	0.281	0.095 **
NPERCATT	0.402 *	0.127					
NPERCEVF	0.420 **	0.106					
PEROLAP	-0.042	0.159					
PERFEED	0.177	0.126					
MANAGERIAL COMMITMENT COMBINED VARIABLE:							
PERMCOP	0.305 **	0.039	0.368	0.126	18.796 **	0.287	0.101 **
MODERATOR EFFECTS - INTERACTION TERMS (GROUPED EFFECTS):							
PERSONALITY VARIABLES:			0.251	0.009	6.846 **	0.207	0.010 *
PPAGWD X LOCCONT	-0.004	0.039					
PPAGWD X NEEDIND	0.058	0.039					
PPAGWD X AUTHORM	0.065	0.041					
(Significance test - Moderator effect:)					1.667		
MANAGERIAL CONTROL SYSTEM VARIABLES:			0.379	0.052	10.826 **	0.305	0.024 **
PPAGWD X NPERCATT	0.074 @	0.043					
PPAGWD X NPERCEVF	0.094 *	0.029					
PPAGWD X PEROLAP	-0.043	0.048					
PPAGWD X PERFEED	-0.077 @	0.040					
(Significance test - Moderator effect:)					5.937 **		
MANAGERIAL COMMITMENT COMBINED VARIABLE:							
PPAGWD X PERMCOP	0.030 *	0.011	0.384	0.016	18.100 **	0.292	0.005 **
(Significance test - Moderator effect:)					7.855 *		

APPENDIX D-5

MODERATED MULTIPLE REGRESSION ANALYSIS REPORT
DEPENDENT VARIABLE : SELPERF; EMPLOYEES' SELF-RATED PERFORMANCE
INDEPENDENT VARIABLE : JOBSAT ; JOB SATISFACTION
HIERARCHY LEVEL : ALL WORK SITES : ALL

** = p < 0.001
* = p < 0.01
# = p < 0.05
@ = p < 0.10

FIRST SURVEY RESULTS: (n = 525)						SECOND SURVEY: (n = 234)	
VARIABLE	BETA	STD ERROR	R.SQ.	CHANGE IN R.SQ.	F-VALUE	R.SQ.	CHANGE IN R.SQ.
BIOGRAPHICAL:			0.069	0.069	4.811 **	0.114	0.114 **
MARR	1.281	0.817					
AGE	0.096 *	0.035					
LANG	0.228	0.157					
EDUC	-0.632 #	0.263					
SITU	0.145	0.530					
COURSE	0.823	0.514					
YEARS	-0.022	0.042					
LEVEL	0.500	0.509					
MAIN EFFECT - INDEPENDENT VARIABLE:							
JOBSAT	0.145 **	0.031	0.106	0.037	6.801 **	0.143	0.029 **
MAIN EFFECTS - MODERATOR VARIABLES (GROUPED EFFECTS)							
PERSONALITY VARIABLES:			0.116	0.010	5.577 **	0.148	0.005 **
LOCCONT	0.102	0.077					
NEEDIND	-0.010	0.065					
AUTHORM	-0.143 @	0.074					
MANAGERIAL CONTROL SYSTEM VARIABLES:			0.147	0.041	6.789 **	0.182	0.039 **
NPERCATT	-0.092	0.077					
NPERCEVF	0.167 *	0.062					
PEROLAP	0.122	0.086					
PERFEED	0.138 @	0.076					
MANAGERIAL COMMITMENT COMBINED VARIABLE:							
PERMCOP	0.086 **	0.026	0.125	0.019	7.359 **	0.179	0.036 **
MODERATOR EFFECTS - INTERACTION TERMS (GROUPED EFFECTS):							
PERSONALITY VARIABLES:			0.121	0.005	4.648 **	0.160	0.012 **
JOBSAT X LOCCONT	-0.006	0.536					
JOBSAT X NEEDIND	-0.003	0.747					
JOBSAT X AUTHORM	0.014	0.125					
(Significance test - Moderator effect:)					0.941		
MANAGERIAL CONTROL SYSTEM VARIABLES:			0.170	0.023	6.117 **	0.197	0.015 **
JOBSAT X NPERCATT	-0.019 #	0.009					
JOBSAT X NPERCEVF	-0.017 *	0.007					
JOBSAT X PEROLAP	0.016	0.010					
JOBSAT X PERFEED	0.014 @	0.008					
(Significance test - Moderator effect:)					3.501 *		
MANAGERIAL COMMITMENT COMBINED VARIABLE:							
JOBSAT X PERMCOP	-0.005 @	0.003	0.131	0.006	7.058 **	0.179	0.000 **
(Significance test - Moderator effect:)					3.668 @		

APPENDIX D-5A

MODERATED MULTIPLE REGRESSION ANALYSIS REPORT — ** = p < 0.001
DEPENDENT VARIABLE : SELPERF; EMPLOYEES' SELF-RATED PERFORMANCE — * = p < 0.01
INDEPENDENT VARIABLE : JOBSAT ; JOB SATISFACTION — # = p < 0.05
HIERARCHY LEVEL : MANAGEMENT — WORK SITES : ALL — @ = p < 0.10

FIRST SURVEY RESULTS: (n = 46)						SECOND SURVEY: (n = 44)	
VARIABLE	BETA	STD ERROR	R.SQ.	CHANGE IN R.SQ.	F-VALUE	R.SQ.	CHANGE IN R.SQ.
BIOGRAPHICAL:			0.119	0.119	0.731	0.144	0.144
MARR	-1.912	2.942					
AGE	0.015	0.081					
LANG	-0.153	0.888					
EDUC	0.682	0.786					
SITU	-1.977	1.373					
COURSE	-1.091	1.198					
YEARS	0.096	0.075					
MAIN EFFECT - INDEPENDENT VARIABLE:							
JOBSAT	0.304 *	0.098	0.301	0.182	1.987 @	0.372	0.228 #
MAIN EFFECTS - MODERATOR VARIABLES (GROUPED EFFECTS)							
PERSONALITY VARIABLES:			0.399	0.098	2.053 @	0.522	0.150 *
LOCCONT	0.400 @	0.211					
NEEDIND	0.179	0.163					
AUTHORM	0.172	0.146					
MANAGERIAL CONTROL SYSTEM VARIABLES:			0.335	0.034	1.383	0.480	0.108 #
NPERCATT	0.001	0.199					
NPERCEVF	0.007	0.243					
PEROLAP	-0.059	0.207					
PERFEED	-0.192	0.225					
MANAGERIAL COMMITMENT COMBINED VARIABLE:							
PERMCOP	-0.014	0.086	0.301	0.000	1.723	0.377	0.005 #
MODERATOR EFFECTS - INTERACTION TERMS (GROUPED EFFECTS):							
PERSONALITY VARIABLES:			0.441	0.042	1.750 @	0.556	0.034 #
JOBSAT X LOCCONT	-0.056	0.037					
JOBSAT X NEEDIND	-0.004	0.032					
JOBSAT X AUTHORM	-0.004	0.020					
(Significance test - Moderator effect:)					0.783		
MANAGERIAL CONTROL SYSTEM VARIABLES:			0.406	0.071	1.238	0.542	0.062 @
JOBSAT X NPERCATT	0.048	0.033					
JOBSAT X NPERCEVF	-0.056	0.039					
JOBSAT X PEROLAP	0.058	0.040					
JOBSAT X PERFEED	0.032	0.040					
(Significance test - Moderator effect:)					0.870		
MANAGERIAL COMMITMENT COMBINED VARIABLE:							
JOBSAT X PERMCOP	0.014	0.014	0.322	0.021	1.659	0.377	0.000 @
(Significance test - Moderator effect:)					1.057		

APPENDIX D-5B

MODERATED MULTIPLE REGRESSION ANALYSIS REPORT
DEPENDENT VARIABLE : SELPERF; EMPLOYEES' SELF-RATED PERFORMANCE
INDEPENDENT VARIABLE : JOBSAT ; JOB SATISFACTION
HIERARCHY LEVEL : CATEGORY A WORK SITES : ALL

** = p < 0.001
* = p < 0.01
# = p < 0.05
@ = p < 0.10

FIRST SURVEY RESULTS: (n = 58)						SECOND SURVEY: (n = 40)	
VARIABLE	BETA	STD ERROR	R.SQ.	CHANGE IN R.SQ.	F-VALUE	R.SQ.	CHANGE IN R.SQ.
BIOGRAPHICAL:			0.201	0.201	1.792	0.108	0.108
MARR	2.891 #	1.429					
AGE	-0.101	0.076					
LANG	-0.692	0.514					
EDUC	-2.136 #	0.929					
SITU	-0.283	1.096					
COURSE	-0.553	0.120					
YEARS	0.217 @	0.128					
MAIN EFFECT - INDEPENDENT VARIABLE:							
JOBSAT	0.246 **	0.057	0.418	0.217	4.398 **	0.246	0.138
MAIN EFFECTS - MODERATOR VARIABLES (GROUPED EFFECTS)							
PERSONALITY VARIABLES:			0.476	0.058	3.791 **	0.274	0.028
LOCCONT	-0.335 @	0.180					
NEEDIND	-0.070	0.138					
AUTHORM	-0.131	0.150					
MANAGERIAL CONTROL SYSTEM VARIABLES:			0.480	0.062	3.459 *	0.394	0.148
NPERCATT	-0.288	0.197					
NPERCEVF	0.079	0.115					
PEROLAP	-0.088	0.197					
PERFEED	0.257	0.163					
MANAGERIAL COMMITMENT COMBINED VARIABLE:							
PERMCOP	0.050	0.049	0.430	0.012	4.024 **	0.274	0.028
MODERATOR EFFECTS - INTERACTION TERMS (GROUPED EFFECTS):							
PERSONALITY VARIABLES:			0.539	0.063	3.592 **	0.336	0.062
JOBSAT X LOCCONT	-0.043 @	0.022					
JOBSAT X NEEDIND	-0.010	0.019					
JOBSAT X AUTHORM	0.019	0.021					
(Significance test - Moderator effect:)					1.976		
MANAGERIAL CONTROL SYSTEM VARIABLES:			0.502	0.022	2.579 *	0.587	0.193 @
JOBSAT X NPERCATT	-0.017	0.024					
JOBSAT X NPERCEVF	0.005	0.014					
JOBSAT X PEROLAP	0.030	0.027					
JOBSAT X PERFEED	-0.019	0.021					
(Significance test - Moderator effect:)					0.450		@
MANAGERIAL COMMITMENT COMBINED VARIABLE:							
JOBSAT X PERMCOP	0.000	0.005	0.430	0.000	3.546 *	0.391	0.117 @
(Significance test - Moderator effect:)					0.000		#

APPENDIX D-5C

MODERATED MULTIPLE REGRESSION ANALYSIS REPORT — ** = p < 0.001
DEPENDENT VARIABLE : SELPERF; EMPLOYEES' SELF-RATED PERFORMANCE — * = p < 0.01
INDEPENDENT VARIABLE : JOBSAT ; JOB SATISFACTION — # = p < 0.05
HIERARCHY LEVEL : CATEGORY B — WORK SITES : ALL — @ = p < 0.10

FIRST SURVEY RESULTS: (n = 421)						SECOND SURVEY: (n = 150)	
VARIABLE	BETA	STD ERROR	R.SQ.	CHANGE IN R.SQ.	F-VALUE	R.SQ.	CHANGE IN R.SQ.
BIOGRAPHICAL:			0.091	0.091	5.877 **	0.056	0.056
MARR	1.045	0.988					
AGE	0.119 *	0.043					
LANG	0.306 @	0.181					
EDUC	-0.781 #	0.304					
SITU	0.363	0.634					
COURSE	1.328 #	0.613					
YEARS	-0.028	0.052					
MAIN EFFECT - INDEPENDENT VARIABLE:							
JOBSAT	0.116 *	0.037	0.112	0.021	6.466 **	0.066	0.010
MAIN EFFECTS - MODERATOR VARIABLES (GROUPED EFFECTS)							
PERSONALITY VARIABLES:			0.124	0.012	5.280 **	0.067	0.001
LOCCONT	0.153 @	0.089					
NEEDIND	-0.029	0.076					
AUTHORM	-0.154 @	0.088					
MANAGERIAL CONTROL SYSTEM VARIABLES:			0.164	0.052	6.677 **	0.147	0.081 #
NPERCATT	-0.099	0.089					
NPERCEVF	0.170 #	0.073					
PEROLAP	0.158	0.102					
PERFEED	0.213 #	0.091					
MANAGERIAL COMMITMENT COMBINED VARIABLE:							
PERMCOP	0.098 *	0.030	0.134	0.022	7.074 **	0.119	0.053 #
MODERATOR EFFECTS - INTERACTION TERMS (GROUPED EFFECTS):							
PERSONALITY VARIABLES:			0.129	0.005	4.307 **	0.079	0.012
JOBSAT X LOCCONT	0.004	0.011					
JOBSAT X NEEDIND	-0.009	0.010					
JOBSAT X AUTHORM	0.014	0.011					
(Significance test - Moderator effect:)					0.772		
MANAGERIAL CONTROL SYSTEM VARIABLES:			0.200	0.036	6.313 **	0.187	0.040 #
JOBSAT X NPERCATT	-0.027 #	0.010					
JOBSAT X NPERCEVF	-0.021 *	0.008					
JOBSAT X PEROLAP	0.024 #	0.012					
JOBSAT X PERFEED	0.020 #	0.009					
(Significance test - Moderator effect:)					4.528 *		
MANAGERIAL COMMITMENT COMBINED VARIABLE:							
JOBSAT X PERMCOP	-0.006 @	0.003	0.141	0.007	6.729 **	0.128	0.009 #
(Significance test - Moderator effect:)					3.268 @		

APPENDIX D-5D

MODERATED MULTIPLE REGRESSION ANALYSIS REPORT — ** = p < 0.001
DEPENDENT VARIABLE : SELPERF; EMPLOYEES' SELF-RATED PERFORMANCE — * = p < 0.01
INDEPENDENT VARIABLE : JOBSAT ; JOB SATISFACTION — # = p < 0.05
HIERARCHY LEVEL : ALL — WORK SITES : ABOVE GROUND — @ = p < 0.10

	FIRST SURVEY RESULTS: (n = 225)					SECOND SURVEY: (n = 96)	
VARIABLE	BETA	STD ERROR	R.SQ.	CHANGE IN R.SQ.	F-VALUE	R.SQ.	CHANGE IN R.SQ.
BIOGRAPHICAL:			0.050	0.050	1.629	0.224	0.224 *
MARR	1.464	1.045					
AGE	0.046	0.052					
LANG	-0.195	0.255					
EDUC	-0.707 #	0.353					
COURSE	0.712	0.756					
YEARS	-0.020	0.060					
LEVEL	0.150	0.686					
MAIN EFFECT - INDEPENDENT VARIABLE:							
JOBSAT	0.115 #	0.047	0.076	0.026	2.199 #	0.247	0.023 *
MAIN EFFECTS - MODERATOR VARIABLES (GROUPED EFFECTS)							
PERSONALITY VARIABLES:			0.081	0.005	1.707 @	0.285	0.038 *
LOCCONT	0.140	0.124					
NEEDIND	0.008	0.092					
AUTHORM	0.014	0.110					
MANAGERIAL CONTROL SYSTEM VARIABLES:			0.100	0.024	1.951 #	0.275	0.028 *
NPERCATT	-0.130	0.120					
NPERCEVF	0.012	0.096					
PEROLAP	-0.013	0.116					
PERFEED	0.218 @	0.119					
MANAGERIAL COMMITMENT COMBINED VARIABLE:							
PERMCOP	0.102 *	0.037	0.107	0.031	2.843 *	0.251	0.004 *
MODERATOR EFFECTS - INTERACTION TERMS (GROUPED EFFECTS):							
PERSONALITY VARIABLES:			0.093	0.012	1.529	0.345	0.060 *
JOBSAT X LOCCONT	-0.014	0.019					
JOBSAT X NEEDIND	-0.010	0.014					
JOBSAT X AUTHORM	0.021	0.017					
(Significance test - Moderator effect:)					0.889		@
MANAGERIAL CONTROL SYSTEM VARIABLES:			0.124	0.024	1.834 #	0.364	0.089 *
JOBSAT X NPERCATT	-0.007	0.015					
JOBSAT X NPERCEVF	-0.017	0.013					
JOBSAT X PEROLAP	0.034 #	0.015					
JOBSAT X PERFEED	0.007	0.016					
(Significance test - Moderator effect:)					1.433		#
MANAGERIAL COMMITMENT COMBINED VARIABLE:							
JOBSAT X PERMCOP	0.005	0.004	0.112	0.005	2.688 *	0.266	0.015 *
(Significance test - Moderator effect:)					1.259		

APPENDIX D-5E

MODERATED MULTIPLE REGRESSION ANALYSIS REPORT — ** = p < 0.001
DEPENDENT VARIABLE : SELPERF; EMPLOYEES' SELF-RATED PERFORMANCE — * = p < 0.01
INDEPENDENT VARIABLE : JOBSAT ; JOB SATISFACTION — # = p < 0.05
HIERARCHY LEVEL : ALL — WORK SITES : BELOW GROUND — @ = p < 0.10

	FIRST SURVEY RESULTS: (n = 300)					SECOND SURVEY: (n = 138)	
VARIABLE	BETA	STD ERROR	R.SQ.	CHANGE IN R.SQ.	F-VALUE	R.SQ.	CHANGE IN R.SQ.
BIOGRAPHICAL:			0.092	0.092	4.236 **	0.075	0.075
MARR	0.359	1.314					
AGE	0.130 *	0.049					
LANG	0.423 #	0.203					
EDUC	-0.615	0.391					
COURSE	0.934	0.704					
YEARS	-0.009	0.061					
LEVEL	0.534	0.819					
MAIN EFFECT - INDEPENDENT VARIABLE:							
JOBSAT	0.165 **	0.043	0.136	0.044	5.736 **	0.100	0.025 @
MAIN EFFECTS - MODERATOR VARIABLES (GROUPED EFFECTS)							
PERSONALITY VARIABLES:			0.153	0.017	4.733 **	0.101	0.001
LOCCONT	0.093	0.101					
NEEDIND	-0.043	0.094					
AUTHORM	-0.222 #	0.103					
MANAGERIAL CONTROL SYSTEM VARIABLES:			0.217	0.081	6.657 **	0.152	0.052 #
NPERCATT	-0.123	0.102					
NPERCEVF	0.260 *	0.083					
PEROLAP	0.254 #	0.127					
PERFEED	0.165	0.101					
MANAGERIAL COMMITMENT COMBINED VARIABLE:							
PERMCOP	0.076 #	0.036	0.149	0.013	5.669 **	0.167	0.067 *
MODERATOR EFFECTS - INTERACTION TERMS (GROUPED EFFECTS):							
PERSONALITY VARIABLES:			0.156	0.003	3.783 **	0.106	0.005
JOBSAT X LOCCONT	-0.005	0.012					
JOBSAT X NEEDIND	0.006	0.011					
JOBSAT X AUTHORM	0.009	0.012					
(Significance test - Moderator effect:)					0.407		
MANAGERIAL CONTROL SYSTEM VARIABLES:			0.253	0.036	6.011 **	0.166	0.014 @
JOBSAT X NPERCATT	-0.029 #	0.011					
JOBSAT X NPERCEVF	-0.015 @	0.009					
JOBSAT X PEROLAP	0.000	0.017					
JOBSAT X PERFEED	0.014	0.009					
(Significance test - Moderator effect:)					3.407 *		
MANAGERIAL COMMITMENT COMBINED VARIABLE:							
JOBSAT X PERMCOP	-0.011 **	0.003	0.181	0.032	6.396 **	0.175	0.008 *
(Significance test - Moderator effect:)					11.159 **		

APPENDIX D-6

MODERATED MULTIPLE REGRESSION ANALYSIS REPORT — ** = p < 0.001
DEPENDENT VARIABLE : SUPPERF; EMPLOYEES' SUPERVISOR-RATED PERFORMANCE — * = p < 0.01
INDEPENDENT VARIABLE : JOBSAT ; JOB SATISFACTION — # = p < 0.05
HIERARCHY LEVEL : ALL — WORK SITES : ALL — @ = p < 0.10

FIRST SURVEY RESULTS: (n = 525)						SECOND SURVEY: (n = 234)
VARIABLE	BETA	STD ERROR	R.SQ.	CHANGE IN R.SQ.	F-VALUE	CHANGE R.SQ. IN R.SQ.
BIOGRAPHICAL:			0.075	0.075	5.194 **	(NOT MEASURED)
MARR	-0.027	0.122				
AGE	0.009 @	0.005				
LANG	0.055 #	0.023				
EDUC	-0.054	0.039				
SITU	-0.040	0.080				
COURSE	0.219 *	0.077				
YEARS	0.001	0.006				
LEVEL	-0.054	0.076				
MAIN EFFECT - INDEPENDENT VARIABLE:						
JOBSAT	0.013 *	0.005	0.088	0.013	5.543 **	
MAIN EFFECTS - MODERATOR VARIABLES (GROUPED EFFECTS)						
PERSONALITY VARIABLES:			0.094	0.006	4.445 **	
LOCCONT	0.008	0.012				
NEEDIND	-0.017 @	0.010				
AUTHORM	-0.001	0.011				
MANAGERIAL CONTROL SYSTEM VARIABLES:			0.103	0.015	4.497 **	
NPERCATT	0.010	0.012				
NPERCEVF	-0.017 @	0.010				
PEROLAP	0.015	0.013				
PERFEED	0.028 #	0.012				
MANAGERIAL COMMITMENT COMBINED VARIABLE:						
PERMCOP	0.005	0.004	0.091	0.003	5.150 **	
MODERATOR EFFECTS - INTERACTION TERMS (GROUPED EFFECTS):						
PERSONALITY VARIABLES:			0.099	0.005	3.707 **	
JOBSAT X LOCCONT	0.002	0.001				
JOBSAT X NEEDIND	0.000	0.001				
JOBSAT X AUTHORM	0.001	0.001				
(Significance test - Moderator effect:)					0.778	
MANAGERIAL CONTROL SYSTEM VARIABLES:			0.111	0.008	3.727 **	
JOBSAT X NPERCATT	-0.001	0.001				
JOBSAT X NPERCEVF	0.001	0.001				
JOBSAT X PEROLAP	0.002	0.002				
JOBSAT X PERFEED	0.000	0.001				
(Significance test - Moderator effect:)					1.200	
MANAGERIAL COMMITMENT COMBINED VARIABLE:						
JOBSAT X PERMCOP	0.000	0.000	0.092	0.001	4.706 **	
(Significance test - Moderator effect:)					0.337	

APPENDIX D-6A

MODERATED MULTIPLE REGRESSION ANALYSIS REPORT — ** = p < 0.001
DEPENDENT VARIABLE : SUPPERF; EMPLOYEES' SUPERVISOR-RATED PERFORMANCE — * = p < 0.01
INDEPENDENT VARIABLE : JOBSAT ; JOB SATISFACTION — # = p < 0.05
HIERARCHY LEVEL : MANAGEMENT — WORK SITES : ALL — @ = p < 0.10

FIRST SURVEY RESULTS: (n = 46)						SECOND SURVEY: (n = 44)	
VARIABLE	BETA	STD ERROR	R.SQ.	CHANGE IN R.SQ.	F-VALUE	R.SQ.	CHANGE IN R.SQ.
BIOGRAPHICAL:			0.205	0.205	1.402	(NOT MEASURED)	
MARR	-0.903	0.725					
AGE	0.003	0.020					
LANG	-0.147	0.219					
EDUC	0.008	0.194					
SITU	-0.209	0.338					
COURSE	0.811 *	0.295					
YEARS	-0.014	0.018					
MAIN EFFECT - INDEPENDENT VARIABLE:							
JOBSAT	0.020	0.027	0.217	0.012	1.279		
MAIN EFFECTS - MODERATOR VARIABLES (GROUPED EFFECTS)							
PERSONALITY VARIABLES:			0.261	0.044	1.091		
LOCCONT	-0.046	0.061					
NEEDIND	-0.050	0.047					
AUTHORM	0.028	0.042					
MANAGERIAL CONTROL SYSTEM VARIABLES:			0.267	0.050	0.999		
NPERCATT	0.079	0.054					
NPERCEVF	-0.033	0.066					
PEROLAP	0.036	0.056					
PERFEED	0.016	0.061					
MANAGERIAL COMMITMENT COMBINED VARIABLE:							
PERMCOP	-0.034	0.023	0.263	0.046	1.425		
MODERATOR EFFECTS - INTERACTION TERMS (GROUPED EFFECTS):							
PERSONALITY VARIABLES:			0.300	0.039	0.950		
JOBSAT X LOCCONT	-0.005	0.009					
JOBSAT X NEEDIND	-0.007	0.010					
JOBSAT X AUTHORM	-0.006	0.006					
(Significance test - Moderator effect:)					0.578		
MANAGERIAL CONTROL SYSTEM VARIABLES:			0.356	0.089	1.000		
JOBSAT X NPERCATT	0.006	0.009					
JOBSAT X NPERCEVF	-0.012	0.011					
JOBSAT X PEROLAP	-0.009	0.011					
JOBSAT X PERFEED	0.012	0.011					
(Significance test - Moderator effect:)					1.002		
MANAGERIAL COMMITMENT COMBINED VARIABLE:							
JOBSAT X PERMCOP	-0.001	0.004	0.264	0.001	1.253		
(Significance test - Moderator effect:)					0.048		

APPENDIX D-6B

MODERATED MULTIPLE REGRESSION ANALYSIS REPORT
DEPENDENT VARIABLE : SUPPERF; EMPLOYEES' SUPERVISOR-RATED PERFORMANCE
INDEPENDENT VARIABLE : JOBSAT ; JOB SATISFACTION
HIERARCHY LEVEL : CATEGORY A WORK SITES : ALL

** = p < 0.001
* = p < 0.01
# = p < 0.05
@ = p < 0.10

FIRST SURVEY RESULTS: (n = 58)						SECOND SURVEY: (n = 40)
VARIABLE	BETA	STD ERROR	R.SQ.	CHANGE IN R.SQ.	F-VALUE	CHANGE R.SQ. IN R.SQ.
BIOGRAPHICAL:			0.094	0.094	0.739	(NOT MEASURED)
MARR	-0.116	0.338				
AGE	0.009	0.018				
LANG	0.072	0.121				
EDUC	0.140	0.220				
SITU	0.309	0.259				
COURSE	0.413	0.265				
YEARS	-0.004	0.030				
MAIN EFFECT - INDEPENDENT VARIABLE:						
JOBSAT	-0.002	0.016	0.094	0.000	0.635	
MAIN EFFECTS - MODERATOR VARIABLES (GROUPED EFFECTS)						
PERSONALITY VARIABLES:			0.162	0.068	0.806	
LOCCONT	0.016	0.050				
NEEDIND	0.048	0.039				
AUTHORM	-0.058	0.042				
MANAGERIAL CONTROL SYSTEM VARIABLES:			0.205	0.111	0.968	
NPERCATT	-0.079	0.054				
NPERCEVF	-0.021	0.032				
PEROLAP	-0.009	0.054				
PERFEED	0.105 #	0.045				
MANAGERIAL COMMITMENT COMBINED VARIABLE:						
PERMCOP	0.010	0.014	0.104	0.010	0.617	
MODERATOR EFFECTS - INTERACTION TERMS (GROUPED EFFECTS):						
PERSONALITY VARIABLES:			0.195	0.033	0.743	
JOBSAT X LOCCONT	0.000	0.007				
JOBSAT X NEEDIND	0.006	0.006				
JOBSAT X AUTHORM	0.005	0.006				
(Significance test - Moderator effect:)					0.592	
MANAGERIAL CONTROL SYSTEM VARIABLES:			0.254	0.049	0.870	
JOBSAT X NPERCATT	0.005	0.006				
JOBSAT X NPERCEVF	0.003	0.004				
JOBSAT X PEROLAP	-0.001	0.007				
JOBSAT X PERFEED	-0.008	0.006				
(Significance test - Moderator effect:)					0.665	
MANAGERIAL COMMITMENT COMBINED VARIABLE:						
JOBSAT X PERMCOP	0.001	0.001	0.110	0.006	0.579	
(Significance test - Moderator effect:)					0.317	

APPENDIX D-6C

MODERATED MULTIPLE REGRESSION ANALYSIS REPORT
DEPENDENT VARIABLE : SUPPERF; EMPLOYEES' SUPERVISOR-RATED PERFORMANCE
INDEPENDENT VARIABLE : JOBSAT ; JOB SATISFACTION
HIERARCHY LEVEL : CATEGORY B WORK SITES : ALL

** = p < 0.001
* = p < 0.01
# = p < 0.05
@ = p < 0.10

FIRST SURVEY RESULTS: (n = 421)						SECOND SURVEY: (n = 150)	
VARIABLE	BETA	STD ERROR	R.SQ.	CHANGE IN R.SQ.	F-VALUE	CHANGE R.SQ.	CHANGE IN R.SQ.
BIOGRAPHICAL:			0.049	0.049	3.061 *	(NOT MEASURED)	
MARR	0.028	0.138					
AGE	0.012 #	0.006					
LANG	0.048 @	0.025					
EDUC	-0.050	0.042					
SITU	-0.113	0.089					
COURSE	0.136	0.086					
YEARS	0.003	0.007					
MAIN EFFECT - INDEPENDENT VARIABLE:							
JOBSAT	0.018 **	0.005	0.076	0.027	4.209 **		
MAIN EFFECTS - MODERATOR VARIABLES (GROUPED EFFECTS)							
PERSONALITY VARIABLES:			0.088	0.012	3.567 **		
LOCCONT	0.009	0.012					
NEEDIND	-0.024 #	0.011					
AUTHORM	0.007	0.012					
MANAGERIAL CONTROL SYSTEM VARIABLES:			0.088	0.012	3.289 **		
NPERCATT	0.009	0.013					
NPERCEVF	-0.015	0.010					
PEROLAP	0.016	0.015					
PERFEED	0.024 @	0.013					
MANAGERIAL COMMITMENT COMBINED VARIABLE:							
PERMCOP	0.006	0.004	0.081	0.005	4.005 **		
MODERATOR EFFECTS - INTERACTION TERMS (GROUPED EFFECTS):							
PERSONALITY VARIABLES:			0.096	0.008	3.064 **		
JOBSAT X LOCCONT	0.002	0.002					
JOBSAT X NEEDIND	0.000	0.001					
JOBSAT X AUTHORM	0.003	0.002					
(Significance test - Moderator effect:)					1.202		
MANAGERIAL CONTROL SYSTEM VARIABLES:			0.096	0.008	2.694 **		
JOBSAT X NPERCATT	-0.001	0.002					
JOBSAT X NPERCEVF	0.001	0.001					
JOBSAT X PEROLAP	0.002	0.002					
JOBSAT X PERFEED	-0.001	0.001					
(Significance test - Moderator effect:)					0.917		
MANAGERIAL COMMITMENT COMBINED VARIABLE:							
JOBSAT X PERMCOP	0.000	0.000	0.081	0.000	3.612 **		
(Significance test - Moderator effect:)					0.142		

APPENDIX D-6D

MODERATED MULTIPLE REGRESSION ANALYSIS REPORT — ** = p < 0.001
DEPENDENT VARIABLE : SUPPERF; EMPLOYEES' SUPERVISOR-RATED PERFORMANCE — * = p < 0.01
INDEPENDENT VARIABLE : JOBSAT ; JOB SATISFACTION — # = p < 0.05
HIERARCHY LEVEL : ALL — WORK SITES : ABOVE GROUND — @ = p < 0.10

FIRST SURVEY RESULTS: (n = 225)						SECOND SURVEY: (n = 96)	
VARIABLE	BETA	STD ERROR	R.SQ.	CHANGE IN R.SQ.	F-VALUE	R.SQ.	CHANGE IN R.SQ.
BIOGRAPHICAL:			0.135	0.135	4.824 **	(NOT MEASURED)	
MARR	-0.028	0.163					
AGE	0.010	0.008					
LANG	0.043	0.040					
EDUC	-0.075	0.055					
COURSE	0.418 **	0.118					
YEARS	-0.009	0.009					
LEVEL	-0.091	0.107					
MAIN EFFECT - INDEPENDENT VARIABLE:							
JOBSAT	-0.003	0.007	0.136	0.001	4.231 **		
MAIN EFFECTS - MODERATOR VARIABLES (GROUPED EFFECTS)							
PERSONALITY VARIABLES:			0.143	0.007	3.204 **		
LOCCONT	0.021	0.020					
NEEDIND	0.005	0.015					
AUTHORM	-0.011	0.017					
MANAGERIAL CONTROL SYSTEM VARIABLES:			0.146	0.010	3.007 **		
NPERCATT	-0.002	0.019					
NPERCEVF	-0.002	0.015					
PEROLAP	-0.018	0.019					
PERFEED	-0.001	0.019					
MANAGERIAL COMMITMENT COMBINED VARIABLE:							
PERMCOP	-0.003	0.006	0.137	0.001	3.783 **		
MODERATOR EFFECTS - INTERACTION TERMS (GROUPED EFFECTS):							
PERSONALITY VARIABLES:			0.146	0.003	2.554 *		
JOBSAT X LOCCONT	-0.001	0.003					
JOBSAT X NEEDIND	0.001	0.002					
JOBSAT X AUTHORM	-0.002	0.003					
(Significance test - Moderator effect:)					0.288		
MANAGERIAL CONTROL SYSTEM VARIABLES:			0.153	0.007	2.342 *		
JOBSAT X NPERCATT	0.001	0.002					
JOBSAT X NPERCEVF	0.001	0.002					
JOBSAT X PEROLAP	0.001	0.002					
JOBSAT X PERFEED	-0.001	0.003					
(Significance test - Moderator effect:)					0.443		
MANAGERIAL COMMITMENT COMBINED VARIABLE:							
JOBSAT X PERMCOP	0.000	0.001	0.137	0.000	3.393 **		
(Significance test - Moderator effect:)					0.035		

APPENDIX D-6E

MODERATED MULTIPLE REGRESSION ANALYSIS REPORT
DEPENDENT VARIABLE : SUPPERF; EMPLOYEES' SUPERVISOR-RATED PERFORMANCE
INDEPENDENT VARIABLE : JOBSAT ; JOB SATISFACTION
HIERARCHY LEVEL : ALL WORK SITES : BELOW GROUND

** = p < 0.001
* = p < 0.01
# = p < 0.05
@ = p < 0.10

FIRST SURVEY RESULTS: (n = 300)						SECOND SURVEY: (n = 138)
VARIABLE	BETA	STD ERROR	R.SQ.	CHANGE IN R.SQ.	F-VALUE	CHANGE R.SQ. IN R.SQ.
BIOGRAPHICAL:			0.051	0.051	2.265 #	(NOT MEASURED)
MARR	-0.024	0.191				
AGE	0.011	0.007				
LANG	0.061 #	0.030				
EDUC	-0.037	0.057				
COURSE	0.061	0.102				
YEARS	0.006	0.009				
LEVEL	0.036	0.119				
MAIN EFFECT - INDEPENDENT VARIABLE:						
JOBSAT	0.025 **	0.006	0.102	0.051	4.138 **	
MAIN EFFECTS - MODERATOR VARIABLES (GROUPED EFFECTS)						
PERSONALITY VARIABLES:			0.121	0.019	3.623 **	
LOCCONT	0.003	0.015				
NEEDIND	-0.034 #	0.014				
AUTHORM	0.005	0.015				
MANAGERIAL CONTROL SYSTEM VARIABLES:			0.131	0.029	3.601 **	
NPERCATT	0.006	0.015				
NPERCEVF	-0.014	0.013				
PEROLAP	0.039 #	0.019				
PERFEED	0.031 #	0.015				
MANAGERIAL COMMITMENT COMBINED VARIABLE:						
PERMCOP	0.011 #	0.005	0.116	0.014	4.229 **	
MODERATOR EFFECTS - INTERACTION TERMS (GROUPED EFFECTS):						
PERSONALITY VARIABLES:			0.133	0.012	3.133 **	
JOBSAT X LOCCONT	0.002	0.002				
JOBSAT X NEEDIND	0.000	0.002				
JOBSAT X AUTHORM	0.003 @	0.002				
(Significance test - Moderator effect:)					1.297	
MANAGERIAL CONTROL SYSTEM VARIABLES:			0.138	0.007	2.841 **	
JOBSAT X NPERCATT	-0.001	0.002				
JOBSAT X NPERCEVF	0.001	0.001				
JOBSAT X PEROLAP	0.002	0.003				
JOBSAT X PERFEED	-0.001	0.001				
(Significance test - Moderator effect:)					0.616	
MANAGERIAL COMMITMENT COMBINED VARIABLE:						
JOBSAT X PERMCOP	0.000	0.001	0.117	0.001	4.229 **	
(Significance test - Moderator effect:)					0.559	

APPENDIX D-7

MODERATED MULTIPLE REGRESSION ANALYSIS REPORT ** = p < 0.001
DEPENDENT VARIABLE : PRSTAY; EMPLOYEES' PROPENSITY TO REMAIN * = p < 0.01
INDEPENDENT VARIABLE : JOBSAT; JOB SATISFACTION # = p < 0.05
HIERARCHY LEVEL : ALL WORK SITES : ALL @ = p < 0.10

	FIRST SURVEY RESULTS: (n = 525)					SECOND SURVEY: (n = 234)	
VARIABLE	BETA	STD ERROR	R.SQ.	CHANGE IN R.SQ.	F-VALUE	R.SQ.	CHANGE IN R.SQ.
BIOGRAPHICAL:			0.037	0.037	2.488 #	0.043	0.043
MARR	-0.416	0.431					
AGE	0.041 #	0.019					
LANG	-0.032	0.083					
EDUC	-0.309 #	0.139					
SITU	-0.021	0.280					
COURSE	-0.322	0.271					
YEARS	0.011	0.022					
LEVEL	-0.079	0.269					
MAIN EFFECT - INDEPENDENT VARIABLE:							
JOBSAT	0.157 **	0.015	0.199	0.162	14.186 **	0.175	0.132 **
MAIN EFFECTS - MODERATOR VARIABLES (GROUPED EFFECTS)							
PERSONALITY VARIABLES:			0.206	0.007	11.049 **	0.182	0.007 **
LOCCONT	0.004	0.038					
NEEDIND	-0.058 @	0.032					
AUTHORM	0.050	0.036					
MANAGERIAL CONTROL SYSTEM VARIABLES:			0.260	0.061	13.786 **	0.208	0.033 **
NPERCATT	0.023	0.037					
NPERCEVF	0.148 **	0.030					
PEROLAP	0.032	0.041					
PERFEED	0.035	0.037					
MANAGERIAL COMMITMENT COMBINED VARIABLE:							
PERMCOP	0.074 **	0.012	0.250	0.051	17.131 **	0.213	0.038 **
MODERATOR EFFECTS - INTERACTION TERMS (GROUPED EFFECTS):							
PERSONALITY VARIABLES:			0.217	0.011	9.405 **	0.209	0.027 **
JOBSAT X LOCCONT	-0.010 #	0.005					
JOBSAT X NEEDIND	0.004	0.004					
JOBSAT X AUTHORM	-0.007	0.005					
(Significance test - Moderator effect:)					2.454 @		@
MANAGERIAL CONTROL SYSTEM VARIABLES:			0.272	0.012	11.140 **	0.217	0.009 **
JOBSAT X NPERCATT	0.011 *	0.004					
JOBSAT X NPERCEVF	-0.002	0.003					
JOBSAT X PEROLAP	0.004	0.005					
JOBSAT X PERFEED	-0.002	0.004					
(Significance test - Moderator effect:)					2.140 @		
MANAGERIAL COMMITMENT COMBINED VARIABLE:							
JOBSAT X PERMCOP	0.001	0.001	0.250	0.000	15.579 **	0.215	0.002 **
(Significance test - Moderator effect:)					0.290		

APPENDIX D-7A

MODERATED MULTIPLE REGRESSION ANALYSIS REPORT
DEPENDENT VARIABLE : PRSTAY; EMPLOYEES' PROPENSITY TO REMAIN
INDEPENDENT VARIABLE : JOBSAT; JOB SATISFACTION
HIERARCHY LEVEL : MANAGEMENT WORK SITES : ALL

** = p < 0.001
* = p < 0.01
# = p < 0.05
@ = p < 0.10

	FIRST SURVEY RESULTS: (n = 46)					SECOND SURVEY: (n = 44)	
VARIABLE	BETA	STD ERROR	R.SQ.	CHANGE IN R.SQ.	F-VALUE	R.SQ.	CHANGE IN R.SQ.
BIOGRAPHICAL:			0.161	0.161	1.039	0.432	0.432 *
MARR	-0.290	1.589					
AGE	0.030	0.044					
LANG	-0.007	0.480					
EDUC	0.743 @	0.425					
SITU	-0.414	0.742					
COURSE	0.518	0.647					
YEARS	0.043	0.040					
MAIN EFFECT - INDEPENDENT VARIABLE:							
JOBSAT	0.084	0.058	0.206	0.045	1.200	0.721	0.289 **
MAIN EFFECTS - MODERATOR VARIABLES (GROUPED EFFECTS)							
PERSONALITY VARIABLES:			0.286	0.080	1.239	0.724	0.003 **
LOCCONT	-0.145	0.099					
NEEDIND	-0.160	0.127					
AUTHORM	-0.030	0.088					
MANAGERIAL CONTROL SYSTEM VARIABLES:			0.358	0.152	1.535	0.733	0.012 **
NPERCATT	-0.073	0.108					
NPERCEVF	-0.195	0.132					
PEROLAP	0.041	0.113					
PERFEED	0.311 #	0.122					
MANAGERIAL COMMITMENT COMBINED VARIABLE:							
PERMCOP	0.059	0.050	0.237	0.031	1.239	0.724	0.003 **
MODERATOR EFFECTS - INTERACTION TERMS (GROUPED EFFECTS):							
PERSONALITY VARIABLES:			0.330	0.044	1.091	0.777	0.053 **
JOBSAT X LOCCONT	0.004	0.022					
JOBSAT X NEEDIND	-0.023	0.019					
JOBSAT X AUTHORM	0.010	0.012					
(Significance test - Moderator effect:)					0.675		@
MANAGERIAL CONTROL SYSTEM VARIABLES:			0.481	0.123	1.682	0.810	0.077 **
JOBSAT X NPERCATT	0.004	0.017					
JOBSAT X NPERCEVF	-0.006	0.020					
JOBSAT X PEROLAP	0.021	0.021					
JOBSAT X PERFEED	0.040 @	0.021					
(Significance test - Moderator effect:)					1.721		#
MANAGERIAL COMMITMENT COMBINED VARIABLE:							
JOBSAT X PERMCOP	0.008	0.008	0.258	0.021	1.214	0.725	0.001 **
(Significance test - Moderator effect:)					0.990		

APPENDIX D-7B

MODERATED MULTIPLE REGRESSION ANALYSIS REPORT — ** = p < 0.001
DEPENDENT VARIABLE : PRSTAY; EMPLOYEES' PROPENSITY TO REMAIN — * = p < 0.01
INDEPENDENT VARIABLE : JOBSAT; JOB SATISFACTION — # = p < 0.05
HIERARCHY LEVEL : CATEGORY A — WORK SITES : ALL — @ = p < 0.10

	FIRST SURVEY RESULTS: (n = 58)					SECOND SURVEY: (n = 40)	
VARIABLE	BETA	STD ERROR	R.SQ.	CHANGE IN R.SQ.	F-VALUE	R.SQ.	CHANGE IN R.SQ.
BIOGRAPHICAL:			0.124	0.124	1.008	0.219	0.219
MARR	-0.302						
AGE	0.024						
LANG	-0.628						
EDUC	-0.876						
SITU	-0.312						
COURSE	-0.132						
YEARS	0.065						
MAIN EFFECT - INDEPENDENT VARIABLE:							
JOBSAT	0.205 **	0.041	0.418	0.294	4.395 **	0.272	0.053
MAIN EFFECTS - MODERATOR VARIABLES (GROUPED EFFECTS)							
PERSONALITY VARIABLES:			0.444	0.026	3.342 *	0.348	0.076
LOCCONT	-0.096	0.133					
NEEDIND	-0.118	0.101					
AUTHORM	0.005	0.111					
MANAGERIAL CONTROL SYSTEM VARIABLES:			0.471	0.053	3.339 *	0.352	0.080
NPERCATT	0.086	0.143					
NPERCEVF	0.109	0.083					
PEROLAP	0.168	0.142					
PERFEED	-0.021	0.118					
MANAGERIAL COMMITMENT COMBINED VARIABLE:							
PERMCOP	0.057	0.035	0.449	0.031	4.353 **	0.282	0.010
MODERATOR EFFECTS - INTERACTION TERMS (GROUPED EFFECTS):							
PERSONALITY VARIABLES:			0.469	0.025	2.715 *	0.451	0.103
JOBSAT X LOCCONT	-0.005	0.017					
JOBSAT X NEEDIND	-0.021	0.015					
JOBSAT X AUTHORM	-0.003	0.016					
(Significance test - Moderator effect:)					0.675		
MANAGERIAL CONTROL SYSTEM VARIABLES:			0.489	0.018	2.453 #	0.472	0.120
JOBSAT X NPERCATT	-0.018	0.017					
JOBSAT X NPERCEVF	0.001	0.010					
JOBSAT X PEROLAP	0.005	0.019					
JOBSAT X PERFEED	0.010	0.015					
(Significance test - Moderator effect:)					0.362		
MANAGERIAL COMMITMENT COMBINED VARIABLE:							
JOBSAT X PERMCOP	0.001	0.003	0.451	0.002	3.856 **	0.327	0.045
(Significance test - Moderator effect:)					0.106		

APPENDIX D-7C

MODERATED MULTIPLE REGRESSION ANALYSIS REPORT
DEPENDENT VARIABLE : PRSTAY; EMPLOYEES' PROPENSITY TO REMAIN
INDEPENDENT VARIABLE : JOBSAT; JOB SATISFACTION
HIERARCHY LEVEL : CATEGORY B WORK SITES : ALL

** = p < 0.001
* = p < 0.01
# = p < 0.05
@ = p < 0.10

FIRST SURVEY RESULTS: (n = 421)						SECOND SURVEY: (n = 150)	
VARIABLE	BETA	STD ERROR	R.SQ.	CHANGE IN R.SQ.	F-VALUE	R.SQ.	CHANGE IN R.SQ.
BIOGRAPHICAL:			0.038	0.038	2.326 #	0.049	0.049
MARR	-0.355	0.512					
AGE	0.037 @	0.022					
LANG	0.035	0.094					
EDUC	-0.389 #	0.157					
SITU	-0.032	0.328					
COURSE	-0.446	0.318					
YEARS	0.002	0.027					
MAIN EFFECT - INDEPENDENT VARIABLE:							
JOBSAT	0.155 **	0.018	0.186	0.148	11.772 **	0.177	0.128 **
MAIN EFFECTS - MODERATOR VARIABLES (GROUPED EFFECTS)							
PERSONALITY VARIABLES:			0.194	0.008	8.965 **	0.197	0.020 **
LOCCONT	0.018	0.043					
NEEDIND	-0.050	0.037					
AUTHORM	0.070	0.043					
MANAGERIAL CONTROL SYSTEM VARIABLES:			0.255	0.069	11.636 **	0.293	0.116 **
NPERCATT	0.031	0.042					
NPERCEVF	0.170 **	0.035					
PEROLAP	0.125	0.049					
PERFEED	0.033	0.043					
MANAGERIAL COMMITMENT COMBINED VARIABLE:							
PERMCOP	0.076 **	0.014	0.241	0.055	14.457 **	0.232	0.055 **
MODERATOR EFFECTS - INTERACTION TERMS (GROUPED EFFECTS):							
PERSONALITY VARIABLES:			0.210	0.016	7.692 **	0.239	0.042 **
JOBSAT X LOCCONT	-0.010 #	0.005					
JOBSAT X NEEDIND	0.008 #	0.005					
JOBSAT X AUTHORM	-0.008	0.006					
(Significance test - Moderator effect:)					2.631 #		@
MANAGERIAL CONTROL SYSTEM VARIABLES:			0.273	0.018	9.497 **	0.321	0.028 **
JOBSAT X NPERCATT	0.015 *	0.005					
JOBSAT X NPERCEVF	-0.001	0.004					
JOBSAT X PEROLAP	0.001	0.006					
JOBSAT X PERFEED	-0.002	0.004					
(Significance test - Moderator effect:)					2.594 #		
MANAGERIAL COMMITMENT COMBINED VARIABLE:							
JOBSAT X PERMCOP	0.001	0.002	0.241	0.000	13.023 **	0.232	0.000 **
(Significance test - Moderator effect:)					0.325		

APPENDIX D-7D

MODERATED MULTIPLE REGRESSION ANALYSIS REPORT
DEPENDENT VARIABLE : PRSTAY; EMPLOYEES' PROPENSITY TO REMAIN
INDEPENDENT VARIABLE : JOBSAT; JOB SATISFACTION
HIERARCHY LEVEL : ALL WORK SITES : ABOVE GROUND

** = p < 0.001
* = p < 0.01
# = p < 0.05
@ = p < 0.10

FIRST SURVEY RESULTS: (n = 225)						SECOND SURVEY: (n = 96)	
VARIABLE	BETA	STD ERROR	R.SQ.	CHANGE IN R.SQ.	F-VALUE	R.SQ.	CHANGE IN R.SQ.
BIOGRAPHICAL:			0.060	0.060	1.965 @	0.041	0.041
MARR	-0.540	0.588					
AGE	0.043	0.029					
LANG	-0.025	0.144					
EDUC	-0.437 #	0.199					
COURSE	-0.769 @	0.425					
YEARS	-0.013	0.034					
LEVEL	0.089	0.386					
MAIN EFFECT - INDEPENDENT VARIABLE:							
JOBSAT	0.162 **	0.025	0.219	0.159	7.516 **	0.177	0.136 #
MAIN EFFECTS - MODERATOR VARIABLES (GROUPED EFFECTS)							
PERSONALITY VARIABLES:			0.229	0.010	5.718 **	0.208	0.031 @
LOCCONT	-0.051	0.064					
NEEDIND	-0.066	0.048					
AUTHORM	-0.019	0.057					
MANAGERIAL CONTROL SYSTEM VARIABLES:			0.242	0.023	5.599 **	0.207	0.030 @
NPERCATT	0.002	0.062					
NPERCEVF	0.081	0.050					
PEROLAP	0.053	0.060					
PERFEED	0.022	0.062					
MANAGERIAL COMMITMENT COMBINED VARIABLE:							
PERMCOP	0.069 **	0.019	0.264	0.045	8.518 **	0.200	0.023 #
MODERATOR EFFECTS - INTERACTION TERMS (GROUPED EFFECTS):							
PERSONALITY VARIABLES:			0.233	0.004	4.529 **	0.247	0.039 @
JOBSAT X LOCCONT	-0.006	0.010					
JOBSAT X NEEDIND	0.003	0.007					
JOBSAT X AUTHORM	0.004	0.009					
(Significance test - Moderator effect:)					0.356		
MANAGERIAL CONTROL SYSTEM VARIABLES:			0.248	0.006	4.273 **	0.231	0.024
JOBSAT X NPERCATT	0.006	0.008					
JOBSAT X NPERCEVF	-0.002	0.007					
JOBSAT X PEROLAP	-0.003	0.008					
JOBSAT X PERFEED	-0.005	0.008					
(Significance test - Moderator effect:)					0.466		
MANAGERIAL COMMITMENT COMBINED VARIABLE:							
JOBSAT X PERMCOP	0.000	0.002	0.264	0.000	7.633 **	0.202	0.002 #
(Significance test - Moderator effect:)					0.018		

APPENDIX D-7E

MODERATED MULTIPLE REGRESSION ANALYSIS REPORT — ** = p < 0.001
DEPENDENT VARIABLE : PRSTAY; EMPLOYEES' PROPENSITY TO REMAIN — * = p < 0.01
INDEPENDENT VARIABLE : JOBSAT; JOB SATISFACTION — # = p < 0.05
HIERARCHY LEVEL : ALL — WORK SITES : BELOW GROUND — @ = p < 0.10

FIRST SURVEY RESULTS: (n = 300)						SECOND SURVEY: (n = 138)	
VARIABLE	BETA	STD ERROR	R.SQ.	CHANGE IN R.SQ.	F-VALUE	R.SQ.	CHANGE IN R.SQ.
BIOGRAPHICAL:			0.035	0.035	1.505	0.061	0.061
MARR	-0.463	0.667					
AGE	0.037	0.025					
LANG	-0.057	0.103					
EDUC	-0.138	0.198					
COURSE	0.061	0.357					
YEARS	0.042	0.031					
LEVEL	-0.517	0.416					
MAIN EFFECT - INDEPENDENT VARIABLE:							
JOBSAT	0.153 **	0.020	0.191	0.156	8.599 **	0.176	0.115 **
MAIN EFFECTS - MODERATOR VARIABLES (GROUPED EFFECTS)							
PERSONALITY VARIABLES:			0.207	0.016	6.847 **	0.187	0.011 *
LOCCONT	0.030	0.048					
NEEDIND	-0.061	0.045					
AUTHORM	0.102 #	0.049					
MANAGERIAL CONTROL SYSTEM VARIABLES:			0.291	0.100	9.855 **	0.228	0.052 **
NPERCATT	0.040	0.048					
NPERCEVF	0.199 **	0.039					
PEROLAP	0.001	0.059					
PERFEED	0.057	0.047					
MANAGERIAL COMMITMENT COMBINED VARIABLE:							
PERMCOP	0.076 **	0.017	0.246	0.055	10.552 **	0.225	0.049 **
MODERATOR EFFECTS - INTERACTION TERMS (GROUPED EFFECTS):							
PERSONALITY VARIABLES:			0.223	0.016	5.872 **	0.236	0.049 *
JOBSAT X LOCCONT	-0.009	0.006					
JOBSAT X NEEDIND	0.004	0.005					
JOBSAT X AUTHORM	-0.011 @	0.006					
(Significance test - Moderator effect:)					2.029		#
MANAGERIAL CONTROL SYSTEM VARIABLES:			0.327	0.036	8.609 **	0.241	0.013 *
JOBSAT X NPERCATT	0.015 *	0.005					
JOBSAT X NPERCEVF	-0.001	0.004					
JOBSAT X PEROLAP	0.013	0.008					
JOBSAT X PERFEED	0.001	0.004					
(Significance test - Moderator effect:)					3.743 *		
MANAGERIAL COMMITMENT COMBINED VARIABLE:							
JOBSAT X PERMCOP	0.002	0.002	0.249	0.003	9.601 **	0.228	0.003 **
(Significance test - Moderator effect:)					1.032		

APPENDIX D-8

MODERATED MULTIPLE REGRESSION ANALYSIS REPORT

DEPENDENT VARIABLE : FINSAT; SATISFACTION WITH FINANCIAL PARTICIPATION

INDEPENDENT VARIABLE : PFNPAR; PERCEIVED EXTENT OF FINANCIAL PARTICIPATION

HIERARCHY LEVEL : ALL WORK SITES : ALL

** = p < 0.001
* = p < 0.01
# = p < 0.05
@ = p < 0.10

FIRST SURVEY RESULTS: (n = 525)						SECOND SURVEY: (n = 234)	
VARIABLE	BETA	STD ERROR	R.SQ.	CHANGE IN R.SQ.	F-VALUE	R.SQ.	CHANGE IN R.SQ.
BIOGRAPHICAL:			0.047	0.047	3.146 *	0.062	0.062 @
MARR	-0.398	0.647					
AGE	0.049 @	0.028					
LANG	0.115	0.124					
EDUC	0.149	0.208					
SITU	-0.734 @	0.420					
COURSE	0.078	0.407					
YEARS	0.081 #	0.033					
LEVEL	-0.757 @	0.403					
MAIN EFFECT - INDEPENDENT VARIABLE:							
PFNPAR	0.651 **	0.037	0.401	0.354	38.321 **	0.539	0.477 **
MAIN EFFECTS - MODERATOR VARIABLES (GROUPED EFFECTS)							
PERSONALITY VARIABLES:			0.412	0.011	29.920 **	0.564	0.025 **
LOCCONT	0.087 @	0.049					
NEEDIND	-0.056	0.416					
AUTHORM	0.108 #	0.047					
MANAGERIAL CONTROL SYSTEM VARIABLES:			0.437	0.036	30.469 **	0.554	0.015 **
NPERCATT	-0.001	0.049					
NPERCEVF	0.081 #	0.039					
PEROLAP	-0.033	0.054					
PERFEED	0.187 **	0.048					
MANAGERIAL COMMITMENT COMBINED VARIABLE:							
PERMCOP	0.165 **	0.015	0.517	0.116	55.067 **	0.595	0.056 **
MODERATOR EFFECTS - INTERACTION TERMS (GROUPED EFFECTS):							
PERSONALITY VARIABLES:			0.420	0.008	24.544 **	0.572	0.008 **
PFNPAR X LOCCONT	-0.014	0.010					
PFNPAR X NEEDIND	0.010	0.010					
PFNPAR X AUTHORM	0.023 #	0.012					
(Significance test - Moderator effect:)					2.200 @		
MANAGERIAL CONTROL SYSTEM VARIABLES:			0.443	0.006	23.762 **	0.561	0.007 **
PFNPAR X NPERCATT	0.019 @	0.011					
PFNPAR X NPERCEVF	-0.014	0.009					
PFNPAR X PEROLAP	-0.008	0.013					
PFNPAR X PERFEED	0.020 @	0.011					
(Significance test - Moderator effect:)					1.542		
MANAGERIAL COMMITMENT COMBINED VARIABLE:							
PFNPAR X PERMCOP	0.006 #	0.003	0.521	0.004	50.735 **	0.597	0.002 **
(Significance test - Moderator effect:)					4.096 #		

APPENDIX D-9

MODERATED MULTIPLE REGRESSION ANALYSIS REPORT
DEPENDENT VARIABLE : ATTCOM; ORGANISATIONAL COMMITMENT
INDEPENDENT VARIABLE : PFNPAR; PERCEIVED EXTENT OF FINANCIAL PARTICIPATION
HIERARCHY LEVEL : ALL WORK SITES : ALL

** = p < 0.001
* = p < 0.01
# = p < 0.05
@ = p < 0.10

FIRST SURVEY RESULTS: (n = 525)						SECOND SURVEY: (n = 234)	
VARIABLE	BETA	STD ERROR	R.SQ.	CHANGE IN R.SQ.	F-VALUE	R.SQ.	CHANGE IN R.SQ.
BIOGRAPHICAL:			0.043	0.043	2.865 *	0.120	0.120 **
MARR	-0.664	0.669					
AGE	0.036	0.029					
LANG	-0.375 *	0.128					
EDUC	0.301	0.215					
SITU	0.532	0.435					
COURSE	0.922 #	0.421					
YEARS	0.008	0.035					
LEVEL	-0.056	0.417					
MAIN EFFECT - INDEPENDENT VARIABLE:							
PFNPAR	0.474 **	0.044	0.218	0.175	15.988 **	0.237	0.117 **
MAIN EFFECTS - MODERATOR VARIABLES (GROUPED EFFECTS)							
PERSONALITY VARIABLES:			0.223	0.005	12.216 **	0.249	0.012 **
LOCCONT	-0.084	0.059					
NEEDIND	-0.038	0.049					
AUTHORM	0.013	0.056					
MANAGERIAL CONTROL SYSTEM VARIABLES:			0.306	0.088	17.351 **	0.383	0.146 **
NPERCATT	0.021	0.056					
NPERCEVF	0.273 **	0.045					
PEROLAP	-0.035	0.062					
PERFEED	0.093 @	0.055					
MANAGERIAL COMMITMENT COMBINED VARIABLE:							
PERMCOP	0.176 **	0.018	0.343	0.125	26.811 **	0.412	0.175 **
MODERATOR EFFECTS - INTERACTION TERMS (GROUPED EFFECTS):							
PERSONALITY VARIABLES:			0.226	0.003	9.923 **	0.254	0.005 **
PFNPAR X LOCCONT	-0.009	0.012					
PFNPAR X NEEDIND	0.010	0.012					
PFNPAR X AUTHORM	-0.015	0.014					
(Significance test - Moderator effect:)					0.806		
MANAGERIAL CONTROL SYSTEM VARIABLES:			0.312	0.006	13.541 **	0.393	0.010 **
PFNPAR X NPERCATT	-0.015	0.013					
PFNPAR X NPERCEVF	-0.014	0.010					
PFNPAR X PEROLAP	0.009	0.014					
PFNPAR X PERFEED	0.002	0.012					
(Significance test - Moderator effect:)					1.110		
MANAGERIAL COMMITMENT COMBINED VARIABLE:							
PFNPAR X PERMCOP	-0.001	0.003	0.343	0.000	24.352 **	0.422	0.010 **
(Significance test - Moderator effect:)					0.189		@

APPENDIX D-10

MODERATED MULTIPLE REGRESSION ANALYSIS REPORT
DEPENDENT VARIABLE : GWDSAT; SATISFACTION WITH PARTICIPATION IN WORK-RELATED DECISION-MAKING
INDEPENDENT VARIABLE : PPGOAL; PERCEIVED EXTENT OF PARTICIPATION IN WORK-GOAL OR BUDGET SETTING
HIERARCHY LEVEL : ALL WORK SITES : ALL

** = p < 0.001
* = p < 0.01
# = p < 0.05
@ = p < 0.10

	FIRST SURVEY RESULTS: (n = 525)					SECOND SURVEY: (n = 234)	
VARIABLE	BETA	STD ERROR	CHANGE R.SQ.	CHANGE IN R.SQ.	F-VALUE	CHANGE R.SQ.	CHANGE IN R.SQ.
BIOGRAPHICAL:			0.037	0.037	2.478 #	0.077	0.077 #
MARR	-0.151	0.316					
AGE	0.021	0.014					
LANG	-0.187 *	0.061					
EDUC	-0.228 #	0.102					
SITU	-0.048	0.205					
COURSE	-0.043	0.199					
YEARS	0.006	0.016					
LEVEL	-0.328 @	0.197					
MAIN EFFECT - INDEPENDENT VARIABLE:							
PPGOAL	0.146 **	0.012	0.242	0.205	18.239 **	0.351	0.274 **
MAIN EFFECTS - MODERATOR VARIABLES (GROUPED EFFECTS):							
PERSONALITY VARIABLES:			0.255	0.013	14.565 **	0.379	0.028 **
LOCCONT	0.057 #	0.027					
NEEDIND	0.010	0.023					
AUTHORM	0.048 @	0.026					
MANAGERIAL CONTROL SYSTEM VARIABLES:			0.260	0.018	13.835 **	0.396	0.045 **
NPERCATT	0.022	0.027					
NPERCEVF	0.070 *	0.023					
PEROLAP	-0.010	0.030					
PERFEED	0.004	0.027					
MANAGERIAL COMMITMENT COMBINED VARIABLE:							
PERMCOP	0.025 *	0.010	0.251	0.009	17.261 **	0.371	0.020 **
MODERATOR EFFECTS - INTERACTION TERMS (GROUPED EFFECTS):							
PERSONALITY VARIABLES:			0.257	0.002	11.724 **	0.387	0.008 **
PPGOAL X LOCCONT	0.004	0.004					
PPGOAL X NEEDIND	-0.002	0.003					
PPGOAL X AUTHORM	-0.001	0.004					
(Significance test - Moderator effect:)					0.522		
MANAGERIAL CONTROL SYSTEM VARIABLES:			0.267	0.007	10.868 **	0.416	0.020 **
PPGOAL X NPERCATT	-0.002	0.004					
PPGOAL X NPERCEVF	-0.004	0.003					
PPGOAL X PEROLAP	-0.003	0.004					
PPGOAL X PERFEED	0.002	0.004					
(Significance test - Moderator effect:)					1.169		
MANAGERIAL COMMITMENT COMBINED VARIABLE:							
PPGOAL X PERMCOP	-0.002 @	0.001	0.256	0.005	16.017 **	0.377	0.006 **
(Significance test - Moderator effect:)					2.930 @		

APPENDIX D-11

MODERATED MULTIPLE REGRESSION ANALYSIS REPORT
DEPENDENT VARIABLE : ATTCOM; ORGANISATIONAL COMMITMENT
INDEPENDENT VARIABLE : PPGOAL; PERCEIVED EXTENT OF PARTICIPATION IN WORK-GOAL OR BUDGET SETTING
HIERARCHY LEVEL : ALL WORK SITES : ALL

** = p < 0.001
* = p < 0.01
# = p < 0.05
@ = p < 0.10

FIRST SURVEY RESULTS: (n = 525)						SECOND SURVEY: (n = 234)	
VARIABLE	BETA	STD ERROR	R.SQ.	CHANGE IN R.SQ.	F-VALUE	R.SQ.	CHANGE IN R.SQ.
BIOGRAPHICAL:			0.043	0.043	2.865 *	0.120	0.120 **
MARR	-0.664	0.669					
AGE	0.036	0.029					
LANG	-0.375 *	0.128					
EDUC	0.301	0.215					
SITU	0.532	0.435					
COURSE	0.922 #	0.421					
YEARS	0.008	0.035					
LEVEL	-0.056	0.417					
MAIN EFFECT - INDEPENDENT VARIABLE:							
PPGOAL	0.262 **	0.027	0.189	0.146	13.315 **	0.291	0.171 **
MAIN EFFECTS - MODERATOR VARIABLES (GROUPED EFFECTS):							
PERSONALITY VARIABLES:			0.197	0.008	10.459 **	0.309	0.018 **
LOCCONT	-0.115 @	0.060					
NEEDIND	-0.036	0.050					
AUTHORM	-0.040	0.057					
MANAGERIAL CONTROL SYSTEM VARIABLES:			0.257	0.068	13.495 **	0.406	0.115 **
NPERCATT	0.054	0.058					
NPERCEVF	0.262 **	0.049					
PEROLAP	-0.037	0.065					
PERFEED	0.078	0.058					
MANAGERIAL COMMITMENT COMBINED VARIABLE:							
PERMCOP	0.189 **	0.020	0.311	0.122	23.178 **	0.414	0.123 **
MODERATOR EFFECTS - INTERACTION TERMS (GROUPED EFFECTS):							
PERSONALITY VARIABLES:			0.200	0.003	8.482 **	0.319	0.010 **
PPGOAL X LOCCONT	-0.007	0.008					
PPGOAL X NEEDIND	-0.007	0.007					
PPGOAL X AUTHORM	0.001	0.008					
(Significance test - Moderator effect:)					0.658		
MANAGERIAL CONTROL SYSTEM VARIABLES:			0.261	0.004	10.492 **	0.426	0.020 **
PPGOAL X NPERCATT	-0.011	0.008					
PPGOAL X NPERCEVF	0.002	0.005					
PPGOAL X PEROLAP	0.001	0.009					
PPGOAL X PERFEED	0.005	0.007					
(Significance test - Moderator effect:)					0.799		
MANAGERIAL COMMITMENT COMBINED VARIABLE:							
PPGOAL X PERMCOP	-0.002	0.002	0.312	0.001	21.102 **	0.415	0.001 **
(Significance test - Moderator effect:)					0.546		

APPENDIX D-12

MODERATED MULTIPLE REGRESSION ANALYSIS REPORT
DEPENDENT VARIABLE : GWDSAT; SATISFACTION WITH PARTICIPATION IN WORK-RELATED DECISION-MAKING
INDEPENDENT VARIABLE : PPSAFE; PERCEIVED EXTENT OF PARTICIPATION IN SAFETY-RELATED DECISION-MAKING
HIERARCHY LEVEL : ALL WORK SITES : ALL

** = p < 0.001
* = p < 0.01
# = p < 0.05
@ = p < 0.10

FIRST SURVEY RESULTS: (n = 525)						SECOND SURVEY: (n = 234)	
VARIABLE	BETA	STD ERROR	R.SQ.	CHANGE IN R.SQ.	F-VALUE	R.SQ.	CHANGE IN R.SQ.
BIOGRAPHICAL:			0.037	0.037	2.478 #	0.077	0.077 #
MARR	-0.151	0.316					
AGE	0.021	0.014					
LANG	-0.187 *	0.061					
EDUC	-0.228 #	0.102					
SITU	-0.048	0.205					
COURSE	-0.043	0.199					
YEARS	0.006	0.016					
LEVEL	-0.328 @	0.197					
MAIN EFFECT - INDEPENDENT VARIABLE:							
PPSAFE	0.255 **	0.027	0.183	0.146	12.775 **	0.280	0.203 **
MAIN EFFECTS - MODERATOR VARIABLES (GROUPED EFFECTS):							
PERSONALITY VARIABLES:			0.199	0.016	10.596 **	0.326	0.046 **
LOCCONT	0.060 #	0.028					
NEEDIND	-0.002	0.024					
AUTHORM	0.063 #	0.027					
MANAGERIAL CONTROL SYSTEM VARIABLES:			0.225	0.042	11.433 **	0.347	0.067 **
NPERCATT	0.018	0.028					
NPERCEVF	0.092 **	0.023					
PEROLAP	-0.011	0.031					
PERFEED	0.030	0.028					
MANAGERIAL COMMITMENT COMBINED VARIABLE:							
PERMCOP	0.041 **	0.010	0.210	0.027	13.676 **	0.331	0.051 **
MODERATOR EFFECTS - INTERACTION TERMS (GROUPED EFFECTS):							
PERSONALITY VARIABLES:			0.201	0.002	8.523 **	0.330	0.004 **
PPSAFE X LOCCONT	0.007	0.008					
PPSAFE X NEEDIND	0.003	0.007					
PPSAFE X AUTHORM	0.001	0.008					
(Significance test - Moderator effect:)					0.385		
MANAGERIAL CONTROL SYSTEM VARIABLES:			0.240	0.015	9.434 **	0.401	0.054 **
PPSAFE X NPERCATT	0.006	0.008					
PPSAFE X NPERCEVF	-0.018 *	0.006					
PPSAFE X PEROLAP	0.007	0.009					
PPSAFE X PERFEED	0.008	0.008					
(Significance test - Moderator effect:)					2.502 #		**
MANAGERIAL COMMITMENT COMBINED VARIABLE:							
PPSAFE X PERMCOP	-0.005 #	0.002	0.220	0.010	13.149 **	0.357	0.026 **
(Significance test - Moderator effect:)					6.429 #		*

APPENDIX D-13

MODERATED MULTIPLE REGRESSION ANALYSIS REPORT
DEPENDENT VARIABLE : ATTCOM; ORGANISATIONAL COMMITMENT
INDEPENDENT VARIABLE : PPSAFE; PERCEIVED EXTENT OF PARTICIPATION IN SAFETY-RELATED DECISION-MAKING
HIERARCHY LEVEL : ALL WORK SITES : ALL

** = p < 0.001
* = p < 0.01
# = p < 0.05
@ = p < 0.10

	FIRST SURVEY RESULTS: (n = 525)					SECOND SURVEY: (n = 234)	
VARIABLE	BETA	STD ERROR	R.SQ.	CHANGE IN R.SQ.	F-VALUE	R.SQ.	CHANGE IN R.SQ.
BIOGRAPHICAL:			0.043	0.043	2.865 *	0.120	0.120 **
MARR	-0.664	0.669					
AGE	0.036	0.029					
LANG	-0.375 *	0.128					
EDUC	0.301	0.215					
SITU	0.532	0.435					
COURSE	0.922 #	0.421					
YEARS	0.008	0.035					
LEVEL	-0.056	0.417					
MAIN EFFECT - INDEPENDENT VARIABLE:							
PPSAFE	0.478 **	0.057	0.157	0.114	10.624 **	0.276	0.156 **
MAIN EFFECTS - MODERATOR VARIABLES (GROUPED EFFECTS):							
PERSONALITY VARIABLES:			0.165	0.008	8.423 **	0.280	0.004 **
LOCCONT	-0.113 @	0.061					
NEEDIND	-0.056	0.051					
AUTHORM	-0.015	0.058					
MANAGERIAL CONTROL SYSTEM VARIABLES:			0.250	0.093	13.091 **	0.382	0.106 **
NPERCATT	0.049	0.058					
NPERCEVF	0.283 **	0.048					
PEROLAP	-0.041	0.065					
PERFEED	0.111 @	0.058					
MANAGERIAL COMMITMENT COMBINED VARIABLE:							
PERMCOP	0.201 **	0.019	0.306	0.149	22.643 **	0.419	0.143 **
MODERATOR EFFECTS - INTERACTION TERMS (GROUPED EFFECTS):							
PERSONALITY VARIABLES:			0.172	0.007	7.023 **	0.283	0.003 **
PPSAFE X LOCCONT	-0.031 @	0.018					
PPSAFE X NEEDIND	-0.005	0.014					
PPSAFE X AUTHORM	-0.009	0.017					
(Significance test - Moderator effect:)					1.350		
MANAGERIAL CONTROL SYSTEM VARIABLES:			0.272	0.022	11.140 **	0.398	0.016 **
PPSAFE X NPERCATT	-0.036 #	0.017					
PPSAFE X NPERCEVF	0.006	0.012					
PPSAFE X PEROLAP	-0.062 **	0.018					
PPSAFE X PERFEED	0.010	0.016					
(Significance test - Moderator effect:)					3.851 *		
MANAGERIAL COMMITMENT COMBINED VARIABLE:							
PPSAFE X PERMCOP	-0.003	0.004	0.306	0.000	20.593 **	0.420	0.001 **
(Significance test - Moderator effect:)					0.372		

APPENDIX D-14

MODERATED MULTIPLE REGRESSION ANALYSIS REPORT
DEPENDENT VARIABLE : GWDSAT; SATISFACTION WITH PARTICIPATION IN WORK-RELATED DECISION-MAKING
INDEPENDENT VARIABLE : PPAGWD; PERCEIVED EXTENT OF PARTICIPATION IN GENERAL WORK-RELATED DECISION-MAKING
HIERARCHY LEVEL : ALL WORK SITES : ALL

** = p < 0.001
* = p < 0.01
# = p < 0.05
@ = p < 0.10

FIRST SURVEY RESULTS: (n = 525)						SECOND SURVEY: (n = 234)	
VARIABLE	BETA	STD ERROR	R.SQ.	CHANGE IN R.SQ.	F-VALUE	R.SQ.	CHANGE IN R.SQ.
BIOGRAPHICAL:			0.037	0.037	2.478 #	0.077	0.077 #
MARR	-0.151	0.316					
AGE	0.021	0.014					
LANG	-0.187 *	0.061					
EDUC	-0.228 #	0.102					
SITU	-0.048	0.205					
COURSE	-0.043	0.199					
YEARS	0.006	0.016					
LEVEL	-0.328 @	0.197					
MAIN EFFECT - INDEPENDENT VARIABLE:							
PPAGWD	0.256 **	0.028	0.175	0.138	12.108 **	0.336	0.259 **
MAIN EFFECTS - MODERATOR VARIABLES (GROUPED EFFECTS):							
PERSONALITY VARIABLES:			0.204	0.029	10.927 **	0.367	0.031 **
LOCCONT	0.077 *	0.028					
NEEDIND	0.007	0.024					
AUTHORM	0.082 *	0.027					
MANAGERIAL CONTROL SYSTEM VARIABLES:			0.222	0.047	11.191 **	0.392	0.056 **
NPERCATT	0.015	0.028					
NPERCEVF	0.108 **	0.022					
PEROLAP	-0.025	0.031					
PERFEED	0.007	0.028					
MANAGERIAL COMMITMENT COMBINED VARIABLE:							
PERMCOP	0.048 **	0.009	0.220	0.045	14.489 **	0.396	0.060 **
MODERATOR EFFECTS - INTERACTION TERMS (GROUPED EFFECTS):							
PERSONALITY VARIABLES:			0.206	0.002	8.814 **	0.375	0.008 **
PPAGWD X LOCCONT	0.003	0.008					
PPAGWD X NEEDIND	0.001	0.007					
PPAGWD X AUTHORM	0.009	0.008					
(Significance test - Moderator effect:)					0.493		
MANAGERIAL CONTROL SYSTEM VARIABLES:			0.251	0.029	9.986 **	0.395	0.003 **
PPAGWD X NPERCATT	0.013	0.008					
PPAGWD X NPERCEVF	-0.024 **	0.006					
PPAGWD X PEROLAP	0.026 *	0.009					
PPAGWD X PERFEED	0.017 #	0.008					
(Significance test - Moderator effect:)					4.947 **		
MANAGERIAL COMMITMENT COMBINED VARIABLE:			0.224	0.224	13.464 **	0.397	0.001 **
PPAGWD X PERMCOP	-0.004 @	0.002					
(Significance test - Moderator effect:)					2.724 @		

APPENDIX D-15

MODERATED MULTIPLE REGRESSION ANALYSIS REPORT
DEPENDENT VARIABLE : ATTCOM; ORGANISATIONAL COMMITMENT
INDEPENDENT VARIABLE : PPAGWD; PERCEIVED EXTENT OF PARTICIPATION IN GENERAL WORK-RELATED DECISION-MAKING
HIERARCHY LEVEL : ALL WORK SITES : ALL

** = p < 0.001
* = p < 0.01
# = p < 0.05
@ = p < 0.10

	FIRST SURVEY RESULTS: (n = 525)					SECOND SURVEY: (n = 234)	
VARIABLE	BETA	STD ERROR	R.SQ.	CHANGE IN R.SQ.	F-VALUE	R.SQ.	CHANGE IN R.SQ.
BIOGRAPHICAL:			0.043	0.043	2.865 *	0.120	0.120 **
MARR	-0.664	0.669					
AGE	0.036	0.029					
LANG	-0.375 *	0.128					
EDUC	0.301	0.215					
SITU	0.532	0.435					
COURSE	0.922 #	0.421					
YEARS	0.008	0.035					
LEVEL	-0.056	0.417					
MAIN EFFECT - INDEPENDENT VARIABLE:							
PPAGWD	0.457 **	0.060	0.140	0.097	9.308 **	0.288	0.168 **
MAIN EFFECTS - MODERATOR VARIABLES (GROUPED EFFECTS):							
PERSONALITY VARIABLES:			0.144	0.004	7.177 **	0.292	0.004 **
LOCCONT	-0.076	0.061					
NEEDIND	0.045	0.052					
AUTHORM	0.027	0.058					
MANAGERIAL CONTROL SYSTEM VARIABLES:			0.241	0.101	12.495 **	0.401	0.113 **
NPERCATT	0.046	0.058					
NPERCEVF	0.313 **	0.047					
PEROLAP	-0.057	0.066					
PERFEED	0.082	0.058					
MANAGERIAL COMMITMENT COMBINED VARIABLE:							
PERMCOP	0.201 **	0.018	0.314	0.174	23.520 **	0.443	0.155 **
MODERATOR EFFECTS - INTERACTION TERMS (GROUPED EFFECTS):							
PERSONALITY VARIABLES:			0.148	0.004	5.875 **	0.300	0.008 **
PPAGWD X LOCCONT	-0.018	0.018					
PPAGWD X NEEDIND	-0.015	0.015					
PPAGWD X AUTHORM	0.011	0.018					
(Significance test - Moderator effect:)					0.716		
MANAGERIAL CONTROL SYSTEM VARIABLES:			0.257	0.016	10.334 **	0.421	0.020 **
PPAGWD X NPERCATT	-0.002	0.018					
PPAGWD X NPERCEVF	0.023 @	0.013					
PPAGWD X PEROLAP	-0.048 *	0.018					
PPAGWD X PERFEED	0.023	0.018					
(Significance test - Moderator effect:)					2.754 #		
MANAGERIAL COMMITMENT COMBINED VARIABLE:			0.314	0.000	21.356 **	0.444	0.001 **
PPAGWD X PERMCOP	0.002	0.005					
(Significance test - Moderator effect:)					0.124		

APPENDIX E

PATH ANALYSIS

MULTIPLE REGRESSION REPORTS

CONTENTS:

APPENDIX	HIERARCHY LEVEL	DEPENDENT VARIABLE
E-1A	WHOLE SAMPLE	PERMCOP
E-1B	WHOLE SAMPLE	FINSAT
E-1C	WHOLE SAMPLE	GWDSAT
E-1D	WHOLE SAMPLE	JOBSAT
E-1E	WHOLE SAMPLE	GRNPERF
E-2A	MANAGEMENT	PERMCOP
E-2B	MANAGEMENT	FINSAT
E-2C	MANAGEMENT	GWDSAT
E-2D	MANAGEMENT	JOBSAT
E-2E	MANAGEMENT	GRNPERF
E-3A	CATEGORY A	PERMCOP
E-3B	CATEGORY A	FINSAT
E-3C	CATEGORY A	GWDSAT
E-3D	CATEGORY A	JOBSAT
E-3E	CATEGORY A	GRNPERF
E-4A	CATEGORY B	PERMCOP
E-4B	CATEGORY B	FINSAT
E-4C	CATEGORY B	GWDSAT
E-4D	CATEGORY B	JOBSAT
E-4E	CATEGORY B	GRNPERF

APPENDIX E-1A

PATH ANALYSIS: MULTIPLE REGRESSION ANALYSIS REPORT

** = p < 0.001
* = p < 0.01
# = p < 0.05
@ = p < 0.10

DEPENDENT VARIABLE : PERMCOP; PERCEIVED MANAGERIAL COMMITMENT TO PARTICIPATION

HIERARCHY LEVEL : ALL

	FIRST SURVEY RESULTS: (n = 525)					SECOND SURVEY: (n = 234)		
VARIABLE	BETA	STD ERROR	R.SQ.	CHANGE IN R.SQ.	F-VALUE	BETA	R.SQ.	CHANGE IN R.SQ.
STEP 1, CONTROLLED VARIABLES:			0.072	0.072	3.609 **		0.127	0.127 *
BIOGRAPHICAL VARIABLES:								
MARR	-0.241	1.514				0.063		
AGE	0.117 @	0.066				0.072		
LANG	-0.750 #	0.292				0.706		
EDUC	0.273	0.491				0.679		
SITU	0.129	0.985				-1.323		
COURSE	1.806 @	0.954				-1.343		
YEARS	0.087	0.078				0.251 #		
LEVEL	-0.928	0.954				1.835		
PERSONALITY VARIABLES:								
NEEDIND	-0.351 *	0.123				0.273		
LOCCONT	0.470 *	0.146				0.517 #		
AUTHORM	0.236 @	0.139				0.380		
STEP 2, PATH VARIABLES:			0.451	0.379	27.855 **		0.532	0.405 **
PFNPAR	0.610 **	0.094				0.594 **		
PPAGWD	0.155	0.133				0.106		
PPSAFE	0.624 **	0.141				0.711 *		
PPGOAL	0.506 **	0.069				0.587 **		
(Significance test - Path variables:)					87.815 **			**

APPENDIX E-1B

PATH ANALYSIS: MULTIPLE REGRESSION ANALYSIS REPORT

** = p < 0.001
* = p < 0.01
# = p < 0.05
@ = p < 0.10

DEPENDENT VARIABLE : FINSAT ; SATISFACTION WITH FINANCIAL PARTICIPATION

HIERARCHY LEVEL : ALL

FIRST SURVEY RESULTS: (n = 525)						SECOND SURVEY: (n = 234)		
VARIABLE	BETA	STD ERROR	R.SQ.	CHANGE IN R.SQ.	F-VALUE	BETA	R.SQ.	CHANGE IN R.SQ.
STEP 1, CONTROLLED VARIABLES:			0.074	0.074	3.706 **		0.110	0.110 *
BIOGRAPHICAL VARIABLES:								
MARR	-0.475					0.833		
AGE	0.049 @					0.037		
LANG	0.163					0.337		
EDUC	0.219					-0.127		
SITU	-0.765 @					-1.067		
COURSE	0.071					-0.650		
YEARS	0.081 #					-0.029		
LEVEL	-0.634					-0.126		
PERSONALITY VARIABLES:								
NEEDIND	-0.125 #	0.052				0.055		
LOCCONT	0.120 @	0.062				0.271 *		
AUTHORM	0.153 *	0.059				0.136		
STEP 2, PATH VARIABLES:			0.527	0.453	33.166 **		0.613	0.503 **
PFNPAR	0.468 **	0.037				0.676 **		
PERMCOP	0.177 **	0.019				0.119 **		
NPERCATT	-0.031	0.045				0.068		
NPERCEVF	-0.080 #	0.039				-0.014		
PEROLAP	-0.016	0.050				0.069		
PERFEED	0.047	0.047				-0.059		
(Significance test - Path variables:)					80.831 **			**

APPENDIX E-1C

PATH ANALYSIS: MULTIPLE REGRESSION ANALYSIS REPORT

DEPENDENT VARIABLE : GWDSAT ; SATISFACTION WITH PARTICIPATION IN WORK-RELATED DECISION-MAKING

HIERARCHY LEVEL : ALL

** = p < 0.001
* = p < 0.01
# = p < 0.05
@ = p < 0.10

	FIRST SURVEY RESULTS: (n = 525)					SECOND SURVEY: (n = 234)		
VARIABLE	BETA	STD ERROR	R.SQ.	CHANGE IN R.SQ.	F-VALUE	BETA	R.SQ.	CHANGE IN R.SQ.
STEP 1, CONTROLLED VARIABLES:			0.073	0.073	3.658 **		0.158	0.158 **
BIOGRAPHICAL VARIABLES:								
MARR	-0.196	0.312				0.025		
AGE	0.018	0.014				0.026		
LANG	-0.158 *	0.060				0.081		
EDUC	-0.208 #	0.101				-0.348 #		
SITU	-0.043	0.203				-0.155		
COURSE	-0.016	0.196				-0.269		
YEARS	0.007	0.016				-0.021 #		
LEVEL	-0.258	0.196				0.655		
PERSONALITY VARIABLES:								
NEEDIND	-0.018	0.025				0.059		
LOCCONT	0.086 *	0.030				0.179 **		
AUTHORM	0.093 *	0.029				0.027		
STEP 2, PATH VARIABLES:			0.301	0.228	11.427 **		0.470	0.312 **
PPAGWD	0.112 **	0.032				0.187 **		
PPSAFE	0.060 @	0.034				0.061		
PPGOAL	0.078 **	0.017				0.071 *		
PERMCOP	0.006	0.012				0.015		
NPERCATT	0.010	0.027				-0.047		
NPERCEVF	0.049 #	0.024				0.063 @		
PEROLAP	-0.023	0.030				0.055		
PERFEED	-0.008	0.028				-0.036		
(Significance test - Path variables:)					20.573 **			**

APPENDIX E-1D

PATH ANALYSIS: MULTIPLE REGRESSION ANALYSIS REPORT

** = p < 0.001
* = p < 0.01
# = p < 0.05
@ = p < 0.10

DEPENDENT VARIABLE : JOBSAT ; JOB SATISFACTION

HIERARCHY LEVEL : ALL

	FIRST SURVEY RESULTS: (n = 525)					SECOND SURVEY: (n = 234)		
VARIABLE	BETA	STD ERROR	R.SQ.	CHANGE IN R.SQ.	F-VALUE	BETA	R.SQ.	CHANGE IN R.SQ.
STEP 1, CONTROLLED VARIABLES:			0.102	0.102	5.273 **		0.129	0.129 **
BIOGRAPHICAL VARIABLES:								
MARR	-2.255 #	1.118				-0.285		
AGE	0.148 *	0.049				0.001		
LANG	-0.359 @	0.216				-0.184		
EDUC	0.182	0.362				0.177		
SITU	-1.714 #	0.728				-2.499 #		
COURSE	1.596 #	0.705				-0.438		
YEARS	0.118 #	0.058				0.098		
LEVEL	0.340	0.705				1.553		
PERSONALITY VARIABLES:								
NEEDIND	-0.227 #	0.091				0.060		
LOCCONT	0.041	0.108				0.053		
AUTHORM	0.175 @	0.103				0.263		
STEP 2, PATH VARIABLES:			0.351	0.249	12.966 **		0.478	0.349 **
NPERCATT	0.207 #	0.094				0.067		
NPERCEVF	0.390 **	0.081				0.488 **		
PEROLAP	0.097	0.106				0.288 @		
PERFEED	0.117	0.096				-0.112		
PFNPAR	0.135	0.091				0.170		
FINSAT	0.269 *	0.089				0.290 #		
PPAGWD	0.514 **	0.113				0.114		
PPSAFE	0.157	0.117				-0.177		
PPGOAL	-0.091	0.062				0.047		
GWDSAT	-0.230	0.157				0.577 #		
(Significance test - Path variables:)					19.352 **			**

APPENDIX E-1E

PATH ANALYSIS: MULTIPLE REGRESSION ANALYSIS REPORT

DEPENDENT VARIABLE : GRNPERF; CONSOLIDATED EMPLOYEE PERFORMANCE

HIERARCHY LEVEL : ALL

** = p < 0.001
* = p < 0.01
# = p < 0.05
@ = p < 0.10

	FIRST SURVEY RESULTS: (n = 525)					SECOND SURVEY: (n = 234)		
VARIABLE	BETA	STD ERROR	CHANGE R.SQ.	CHANGE IN R.SQ.	F-VALUE	BETA	R.SQ.	CHANGE IN R.SQ.
STEP 1, CONTROLLED VARIABLES:			0.095	0.095	4.913 **		0.084	0.084 #
BIOGRAPHICAL VARIABLES:								
MARR	0.754	1.020				1.127		
AGE	0.146 *	0.044				-0.020		
LANG	0.280	0.197				-0.445		
EDUC	-0.893 *	0.331				-0.028		
SITU	-0.018	0.663				-0.175		
COURSE	0.618	0.643				0.174		
YEARS	-0.008	0.053				0.082		
LEVEL	0.539	0.643				0.977		
PERSONALITY VARIABLES:								
NEEDIND	-0.156 @	0.083				0.019		
LOCCONT	0.127	0.099				-0.014		
AUTHORM	-0.040	0.094				0.242		
STEP 2, PATH VARIABLES:			0.268	0.173	10.288 **		0.283	0.199 **
NPERCATT	-0.055	0.090				-0.078		
NPERCEVF	0.290 **	0.076				0.164		
PEROLAP	0.180 @	0.102				-0.098		
PERFEED	0.175 @	0.092				0.165		
JOBSAT	0.192 **	0.042				0.052		
FINSAT	0.078	0.071				0.383 **		
GWDSAT	-0.012	0.142				0.179		
(Significance test - Path variables:)					17.044 **			**

APPENDIX E-2A

PATH ANALYSIS: MULTIPLE REGRESSION ANALYSIS REPORT

** = p < 0.001
* = p < 0.01
# = p < 0.05
@ = p < 0.10

DEPENDENT VARIABLE : PERMCOP; PERCEIVED MANAGERIAL COMMITMENT TO PARTICIPATION

HIERARCHY LEVEL : MANAGEMENT

	FIRST SURVEY RESULTS: (n = 46)					SECOND SURVEY: (n = 44)		
VARIABLE	BETA	STD ERROR	R.SQ.	CHANGE IN R.SQ.	F-VALUE	BETA	R.SQ.	CHANGE IN R.SQ.
STEP 1, CONTROLLED VARIABLES:			0.357	0.357	1.942 @		0.241	0.241
BIOGRAPHICAL VARIABLES:								
MARR	9.407	6.314				5.994		
AGE	0.259 @	0.152				0.185		
LANG	1.719	1.679				0.886		
EDUC	1.867	1.563				6.420 *		
SITU	0.385	2.584				3.974		
COURSE	-0.020	2.215				-1.997		
YEARS	0.200	0.143				0.224		
PERSONALITY VARIABLES:								
NEEDIND	0.113	0.336				-0.534		
LOCCONT	-0.149	0.441				-0.356		
AUTHORM	0.050	0.305				-0.618		
STEP 2, PATH VARIABLES:			0.650	0.293	4.112 **		0.655	0.414 **
PFNPAR	0.583 #	0.242				0.446		
PPAGWD	-1.202 #	0.485				0.964 @		
PPSAFE	0.444	0.418				-1.055 @		
PPGOAL	0.582 #	0.272				1.317 *		
(Significance test - Path variables:)					6.490 **			**

APPENDIX E-2B

PATH ANALYSIS: MULTIPLE REGRESSION ANALYSIS REPORT

** = p < 0.001
* = p < 0.01
# = p < 0.05
@ = p < 0.10

DEPENDENT VARIABLE : FINSAT ; SATISFACTION WITH FINANCIAL PARTICIPATION

HIERARCHY LEVEL : MANAGEMENT

FIRST SURVEY RESULTS: (n = 46)						SECOND SURVEY: (n = 44)		
VARIABLE	BETA	STD ERROR	R.SQ.	CHANGE IN R.SQ.	F-VALUE	BETA	R.SQ.	CHANGE IN R.SQ.
STEP 1, CONTROLLED VARIABLES:			0.353	0.353	1.912 @		0.187	0.187
BIOGRAPHICAL VARIABLES:								
MARR	3.286	3.116				0.957		
AGE	0.145 @	0.075				0.027		
LANG	1.388	0.828				0.959		
EDUC	0.510	0.771				1.521		
SITU	1.601	1.275				-0.231		
COURSE	-1.825	1.093				-2.132		
YEARS	-0.005	0.071				0.069		
PERSONALITY VARIABLES:								
NEEDIND	-1.108	0.166				-0.243		
LOCCONT	0.443 #	0.218				-0.195		
AUTHORM	-0.033	0.150				0.019		
STEP 2, PATH VARIABLES:			0.754	0.401	5.568 **		0.810	0.623 **
PFNPAR	0.413 **	0.113				0.915 **		
PERMCOP	0.253 **	0.067				0.116		
NPERCATT	-0.191	0.138				-0.166		
NPERCEVF	-0.039	0.170				-0.084		
PEROLAP	-0.014	0.136				0.419 @		
PERFEED	-0.025	0.147				-0.369 #		
(Significance test - Path variables:)					7.895 **			**

APPENDIX E-2C

PATH ANALYSIS: MULTIPLE REGRESSION ANALYSIS REPORT

** = p < 0.001
* = p < 0.01
# = p < 0.05
@ = p < 0.10

DEPENDENT VARIABLE : GWDSAT ; SATISFACTION WITH PARTICIPATION IN WORK-RELATED DECISION-MAKING

HIERARCHY LEVEL : MANAGEMENT

FIRST SURVEY RESULTS: (n = 46)						SECOND SURVEY: (n = 44)		
VARIABLE	BETA	STD ERROR	R.SQ.	CHANGE IN R.SQ.	F-VALUE	BETA	R.SQ.	CHANGE IN R.SQ.
STEP 1, CONTROLLED VARIABLES:			0.169	0.169	0.712		0.213	0.213
BIOGRAPHICAL VARIABLES:								
MARR	1.210	1.057				-0.470		
AGE	0.008	0.025				-0.050		
LANG	0.060	0.281				0.119		
EDUC	0.230	0.262				-0.246		
SITU	-0.099	0.433				-0.879		
COURSE	0.081	0.371				-0.345		
YEARS	0.015	0.024				-0.024		
PERSONALITY VARIABLES:								
NEEDIND	-0.068	0.056				-0.019		
LOCCONT	0.007	0.074				0.071		
AUTHORM	0.035	0.051				-0.035		
STEP 2, PATH VARIABLES:			0.419	0.250	1.081		0.523	0.310
PPAGWD	0.093	0.143				0.182		
PPSAFE	-0.020	0.090				-0.001		
PPGOAL	0.104	0.062				0.091		
PERMCOP	-0.025	0.038				0.033		
NPERCATT	0.073	0.071				-0.076		
NPERCEVF	-0.045	0.094				-0.082		
PEROLAP	-0.033	0.086				0.122		
PERFEED	0.032	0.077				-0.039		
(Significance test - Path variables:)					1.450			@

APPENDIX E-2D

PATH ANALYSIS: MULTIPLE REGRESSION ANALYSIS REPORT

DEPENDENT VARIABLE : JOBSAT ; JOB SATISFACTION

HIERARCHY LEVEL : MANAGEMENT

** = p < 0.001
* = p < 0.01
# = p < 0.05
@ = p < 0.10

FIRST SURVEY RESULTS: (n = 46)						SECOND SURVEY: (n = 44)		
VARIABLE	BETA	STD ERROR	R.SQ.	CHANGE IN R.SQ.	F-VALUE	BETA	R.SQ.	CHANGE IN R.SQ.
STEP 1, CONTROLLED VARIABLES:			0.478	0.478	3.210 *		0.254	0.254
BIOGRAPHICAL VARIABLES:								
MARR	7.185	5.257				-3.632		
AGE	0.255 @	0.126				-0.071		
LANG	2.482 @	1.398				1.163		
EDUC	2.479 @	1.301				2.011		
SITU	-1.199	2.152				-4.290		
COURSE	0.769	1.844				0.330		
YEARS	0.228 @	0.119				0.017		
PERSONALITY VARIABLES:								
NEEDIND	-0.335	0.280				-0.080		
LOCCONT	-0.168	0.368				-0.714		
AUTHORM	0.063	0.254				-0.149		
STEP 2, PATH VARIABLES:			0.598	0.120	1.856 @		0.810	0.556 **
NPERCATT	-0.258	0.393				0.065		
NPERCEVF	0.543	0.518				0.384		
PEROLAP	0.321	0.470				-0.731 @		
PERFEED	-0.624	0.437				0.702 #		
PFNPAR	-0.012	0.372				-0.348		
FINSAT	0.080	0.450				0.644 @		
PPAGWD	-0.200	0.783				0.302		
PPSAFE	-0.357	0.480				0.050		
PPGOAL	0.312	0.357				0.347		
GWDSAT	-1.405	1.040				-0.011		
(Significance test - Path variables:)					0.740			**

APPENDIX E-2E

PATH ANALYSIS: MULTIPLE REGRESSION ANALYSIS REPORT

** = p < 0.001
* = p < 0.01
# = p < 0.05
@ = p < 0.10

DEPENDENT VARIABLE : GRNPERF; CONSOLIDATED EMPLOYEE PERFORMANCE

HIERARCHY LEVEL : MANAGEMENT

	FIRST SURVEY RESULTS: (n = 46)					SECOND SURVEY: (n = 44)		
VARIABLE	BETA	STD ERROR	R.SQ.	CHANGE IN R.SQ.	F-VALUE	BETA	R.SQ.	CHANGE IN R.SQ.
STEP 1, CONTROLLED VARIABLES:			0.202	0.202	0.887		0.318	0.318
BIOGRAPHICAL VARIABLES:								
MARR	-3.205	4.141				-0.463		
AGE	0.030	0.099				-0.186		
LANG	-0.557	1.101				0.489		
EDUC	1.651	1.025				0.035		
SITU	-2.732	1.695				-0.178		
COURSE	0.441	1.453				2.876		
YEARS	0.121	0.094				0.266 @		
PERSONALITY VARIABLES:								
NEEDIND	-0.167	0.220				0.465		
LOCCONT	0.140	0.290				-0.376		
AUTHORM	0.195	0.200				0.369		
STEP 2, PATH VARIABLES:			0.435	0.233	1.267		0.737	0.419 **
NPERCATT	0.059	0.255				0.265		
NPERCEVF	-0.217	0.315				0.126		
PEROLAP	0.002	0.262				0.053		
PERFEED	0.166	0.281				-0.387		
JOBSAT	0.438 *	0.140				0.554 *		
FINSAT	-0.097	0.218				-0.188		
GWDSAT	-0.180	0.675				0.769		
(Significance test - Path variables:)					1.645			**

APPENDIX E-3A

PATH ANALYSIS: MULTIPLE REGRESSION ANALYSIS REPORT

** = p < 0.001
* = p < 0.01
# = p < 0.05
@ = p < 0.10

DEPENDENT VARIABLE : PERMCOP; PERCEIVED MANAGERIAL COMMITMENT TO PARTICIPATION

HIERARCHY LEVEL : CATEGORY A

	FIRST SURVEY RESULTS: (n = 58)					SECOND SURVEY: (n = 40)		
VARIABLE	BETA	STD ERROR	R.SQ.	CHANGE IN R.SQ.	F-VALUE	BETA	R.SQ.	CHANGE IN R.SQ.
STEP 1, CONTROLLED VARIABLES:			0.328	0.328	2.297 #		0.409	0.409 @
BIOGRAPHICAL VARIABLES:								
MARR	4.295	3.966				-4.320		
AGE	-0.253	0.220				0.276		
LANG	3.557 #	1.417				-0.852		
EDUC	4.871 @	2.661				1.609		
SITU	3.454	3.020				0.767		
COURSE	3.203	3.137				-1.489		
YEARS	0.494	0.362				0.322		
PERSONALITY VARIABLES:								
NEEDIND	-0.892 #	0.442				-1.707 *		
LOCCONT	0.073	0.584				-0.313		
AUTHORM	0.857 @	0.470				0.452		
STEP 2, PATH VARIABLES:			0.802	0.474	12.431 **		0.762	0.353 **
PFNPAR	0.941 **	0.218				1.177 **		
PPAGWD	-0.292	0.303				-0.771		
PPSAFE	0.966 *	0.338				1.351 #		
PPGOAL	0.830 **	0.162				0.598		
(Significance test - Path variables:)					25.698 **			**

APPENDIX E-3B

PATH ANALYSIS: MULTIPLE REGRESSION ANALYSIS REPORT

** = p < 0.001
* = p < 0.01
# = p < 0.05
@ = p < 0.10

DEPENDENT VARIABLE : FINSAT ; SATISFACTION WITH FINANCIAL PARTICIPATION

HIERARCHY LEVEL : CATEGORY A

	FIRST SURVEY RESULTS: (n = 58)					SECOND SURVEY: (n = 40)		
VARIABLE	BETA	STD ERROR	R.SQ.	CHANGE IN R.SQ.	F-VALUE	BETA	R.SQ.	CHANGE IN R.SQ.
STEP 1, CONTROLLED VARIABLES:			0.234	0.234	1.435		0.409	0.409 @
BIOGRAPHICAL VARIABLES:								
MARR	-0.143	1.741				-2.752 @		
AGE	0.013	0.096				0.255 *		
LANG	-0.814	0.622				0.772		
EDUC	-0.687	1.168				1.462		
SITU	-1.082	1.325				-1.722		
COURSE	1.289	1.377				-0.770		
YEARS	0.186	0.159				-0.303 @		
PERSONALITY VARIABLES:								
NEEDIND	-0.330 @	0.194				-0.290		
LOCCONT	-0.178	0.256				-0.037		
AUTHORM	0.107	0.206				-0.307		
STEP 2, PATH VARIABLES:			0.690	0.456	5.709 **		0.853	0.444 **
PFNPAR	0.606 **	0.156				0.578 **		
PERMCOP	0.126 @	0.074				0.106		
NPERCATT	0.378	0.227				0.467 #		
NPERCEVF	-0.186	0.121				-0.390 *		
PEROLAP	0.192	0.211				-0.080		
PERFEED	-0.085	0.187				0.009		
(Significance test - Path variables:)					10.065 **			**

APPENDIX E-3C

PATH ANALYSIS: MULTIPLE REGRESSION ANALYSIS REPORT

DEPENDENT VARIABLE : GWDSAT ; SATISFACTION WITH PARTICIPATION IN WORK-RELATED DECISION-MAKING

HIERARCHY LEVEL : CATEGORY A

** = p < 0.001
* = p < 0.01
# = p < 0.05
@ = p < 0.10

	FIRST SURVEY RESULTS: (n = 58)					SECOND SURVEY: (n = 40)		
VARIABLE	BETA	STD ERROR	R.SQ.	CHANGE IN R.SQ.	F-VALUE	BETA	R.SQ.	CHANGE IN R.SQ.
STEP 1, CONTROLLED VARIABLES:			0.131	0.131	0.705		0.282	0.282
BIOGRAPHICAL VARIABLES:								
MARR	-0.396	0.671				-0.974 @		
AGE	0.031	0.037				0.047		
LANG	0.121	0.240				0.005		
EDUC	0.380	0.450				0.341		
SITU	-0.042	0.511				-0.634		
COURSE	0.199	0.530				0.193		
YEARS	-0.031	0.061				-0.117 @		
PERSONALITY VARIABLES:								
NEEDIND	-0.073	0.075				-0.105		
LOCCONT	-0.032	0.099				-0.013		
AUTHORM	0.151 @	0.079				0.003		
STEP 2, PATH VARIABLES:			0.537	0.406	2.517 *		0.643	0.361 @
PPAGWD	0.090	0.079				0.232 @		
PPSAFE	0.158 @	0.088				-0.020		
PPGOAL	0.132 #	0.052				0.060		
PERMCOP	-0.015	0.039				-0.040		
NPERCATT	-0.079	0.089				0.045		
NPERCEVF	-0.010	0.058				0.135 @		
PEROLAP	0.006	0.090				-0.104		
PERFEED	0.049	0.092				0.063		
(Significance test - Path variables:)					4.288 **			#

APPENDIX E-3D

PATH ANALYSIS: MULTIPLE REGRESSION ANALYSIS REPORT

** = p < 0.001
* = p < 0.01
# = p < 0.05
@ = p < 0.10

DEPENDENT VARIABLE : JOBSAT ; JOB SATISFACTION

HIERARCHY LEVEL : CATEGORY A

FIRST SURVEY RESULTS: (n = 58)						SECOND SURVEY: (n = 40)		
VARIABLE	BETA	STD ERROR	R.SQ.	CHANGE IN R.SQ.	F-VALUE	BETA	R.SQ.	CHANGE IN R.SQ.
STEP 1, CONTROLLED VARIABLES:			0.274	0.274	1.776 @		0.351	0.351
BIOGRAPHICAL VARIABLES:								
MARR	2.659	3.010				-2.054		
AGE	0.002	0.167				0.215 @		
LANG	-1.531	1.076				0.703		
EDUC	-2.078	2.020				1.221		
SITU	-0.024	2.291				-1.580		
COURSE	0.994	2.381				-1.331		
YEARS	0.429	0.275				-0.298		
PERSONALITY VARIABLES:								
NEEDIND	-0.327	0.336				-0.302		
LOCCONT	-0.035	0.443				-0.498		
AUTHORM	0.689 @	0.357				0.492		
STEP 2, PATH VARIABLES:			0.620	0.346	3.012 *		0.654	0.303 @
NPERCATT	0.359	0.495				0.234		
NPERCEVF	0.370	0.291				0.013		
PEROLAP	0.552	0.442				-0.220		
PERFEED	0.143	0.385				0.067		
PFNPAR	0.476	0.401				0.662		
FINSAT	-0.305	0.377				-0.403		
PPAGWD	0.336	0.358				0.365		
PPSAFE	-0.517	0.414				0.866		
PPGOAL	0.227	0.257				0.189		
GWDSAT	0.501	0.736				-0.419		
(Significance test - Path variables:)					3.358 *			

APPENDIX E-3E

PATH ANALYSIS: MULTIPLE REGRESSION ANALYSIS REPORT

** = p < 0.001
* = p < 0.01
# = p < 0.05
@ = p < 0.10

DEPENDENT VARIABLE : GRNPERF; CONSOLIDATED EMPLOYEE PERFORMANCE

HIERARCHY LEVEL : CATEGORY A

	FIRST SURVEY RESULTS: (n = 58)					SECOND SURVEY: (n = 40)		
VARIABLE	BETA	STD ERROR	R.SQ.	CHANGE IN R.SQ.	F-VALUE	BETA	R.SQ.	CHANGE IN R.SQ.
STEP 1, CONTROLLED VARIABLES:			0.268	0.268	1.720		0.264	0.264
BIOGRAPHICAL VARIABLES:								
MARR	2.691	2.002				-0.836		
AGE	-0.045	0.111				0.109		
LANG	-1.369 @	0.715				-2.094 #		
EDUC	-2.147	1.343				-0.166		
SITU	-0.520	1.524				-0.424		
COURSE	-0.889	1.583				-1.861		
YEARS	0.285	0.183				0.018		
PERSONALITY VARIABLES:								
NEEDIND	-0.289	0.223				-0.609 @		
LOCCONT	-0.431	0.295				-0.413		
AUTHORM	0.130	0.237				0.213		
STEP 2, PATH VARIABLES:			0.705	0.437	5.629 **		0.699	0.435 *
NPERCATT	-0.215	0.230				-1.050 #		
NPERCEVF	0.147	0.142				-0.955 *		
PEROLAP	-0.046	0.246				0.314		
PERFEED	0.436 #	0.198				0.749 #		
JOBSAT	0.327 **	0.088				0.425 #		
FINSAT	-0.153	0.138				0.360		
GWDSAT	0.466	0.344				-0.631		
(Significance test - Path variables:)					8.478 **			*

APPENDIX E-4A

PATH ANALYSIS: MULTIPLE REGRESSION ANALYSIS REPORT

** = p < 0.001
* = p < 0.01
# = p < 0.05
@ = p < 0.10

DEPENDENT VARIABLE : PERMCOP; PERCEIVED MANAGERIAL COMMITMENT TO PARTICIPATION

HIERARCHY LEVEL : CATEGORY B

FIRST SURVEY RESULTS: (n = 421)						SECOND SURVEY: (n = 150)		
VARIABLE	BETA	STD ERROR	R.SQ.	CHANGE IN R.SQ.	F-VALUE	BETA	R.SQ.	CHANGE IN R.SQ.
STEP 1, CONTROLLED VARIABLES:			0.065	0.065	2.825 *		0.171	0.171 *
BIOGRAPHICAL VARIABLES:								
MARR	-0.675	1.767				1.724		
AGE	0.085	0.078				0.041		
LANG	-0.453	0.326				0.502		
EDUC	0.063	0.549				0.164		
SITU	-0.284	1.136				-3.097		
COURSE	1.429	1.101				-1.513		
YEARS	0.044	0.093				0.190		
PERSONALITY VARIABLES:								
NEEDIND	-0.333 #	0.138				0.608 #		
LOCCONT	0.627 **	0.161				0.483 @		
AUTHORM	0.135	0.160				0.674 @		
STEP 2, PATH VARIABLES:			0.437	0.372	22.496 **		0.576	0.405 **
PFNPAR	0.578 **	0.110				0.602 *		
PPAGWD	0.220	0.156				0.060		
PPSAFE	0.641 **	0.163				0.933 **		
PPGOAL	0.491 **	0.080				0.556 **		
(Significance test - Path variables:)					67.116 **			**

APPENDIX E-4B

PATH ANALYSIS: MULTIPLE REGRESSION ANALYSIS REPORT

** = p < 0.001
* = p < 0.01
# = p < 0.05
@ = p < 0.10

DEPENDENT VARIABLE : FINSAT ; SATISFACTION WITH FINANCIAL PARTICIPATION

HIERARCHY LEVEL : CATEGORY B

FIRST SURVEY RESULTS: (n = 421)						SECOND SURVEY: (n = 150)		
VARIABLE	BETA	STD ERROR	R.SQ.	CHANGE IN R.SQ.	F-VALUE	BETA	R.SQ.	CHANGE IN R.SQ.
STEP 1, CONTROLLED VARIABLES:			0.066	0.066	2.889 *		0.149	0.149 #
BIOGRAPHICAL VARIABLES:								
MARR	-0.341	0.743				1.852 @		
AGE	0.040	0.033				-0.007		
LANG	0.209	0.137				0.150		
EDUC	0.247	0.231				-0.332		
SITU	-0.790 @	0.478				-1.224		
COURSE	-0.036	0.463				-0.337		
YEARS	0.087 #	0.039				0.003		
PERSONALITY VARIABLES:								
NEEDIND	-0.110 @	0.058				0.077		
LOCCONT	0.146 #	0.068				0.343 *		
AUTHORM	0.158 #	0.067				0.155		
STEP 2, PATH VARIABLES:			0.515	0.449	26.779 **		0.623	0.474 **
PFNPAR	0.461 **	0.044				0.644 **		
PERMCOP	0.175 **	0.021				0.124 **		
NPERCATT	-0.021	0.050				0.087		
NPERCEVF	-0.056	0.046				0.032		
PEROLAP	-0.068	0.058				0.032		
PERFEED	0.060	0.055				-0.006		
(Significance test - Path variables:)					62.278 **			**

APPENDIX E-4C

PATH ANALYSIS: MULTIPLE REGRESSION ANALYSIS REPORT

** = p < 0.001
* = p < 0.01
# = p < 0.05
@ = p < 0.10

DEPENDENT VARIABLE : GWDSAT ; SATISFACTION WITH PARTICIPATION IN WORK-RELATED DECISION-MAKING

HIERARCHY LEVEL : CATEGORY B

	FIRST SURVEY RESULTS: (n = 421)					SECOND SURVEY: (n = 150)		
VARIABLE	BETA	STD ERROR	R.SQ.	CHANGE IN R.SQ.	F-VALUE	BETA	R.SQ.	CHANGE IN R.SQ.
STEP 1, CONTROLLED VARIABLES:			0.079	0.079	3.498 **		0.221	0.221 **
BIOGRAPHICAL VARIABLES:								
MARR	-0.269	0.379				0.115		
AGE	0.021	0.017				0.053 @		
LANG	-0.175 #	0.070				0.070		
EDUC	-0.256 #	0.118				-0.424 #		
SITU	-0.049	0.244				-0.008		
COURSE	-0.023	0.236				-0.346		
YEARS	0.007	0.020				-0.022		
PERSONALITY VARIABLES:								
NEEDIND	-0.005	0.030				0.062		
LOCCONT	0.098 *	0.034				0.218 **		
AUTHORM	0.096 *	0.034				-0.012		
STEP 2, PATH VARIABLES:			0.310	0.231	10.024 **		0.530	0.309 **
PPAGWD	0.124 *	0.038				0.225 *		
PPSAFE	0.062	0.040				0.072		
PPGOAL	0.077 **	0.020				0.062 @		
PERMCOP	0.006	0.013				0.035		
NPERCATT	0.021	0.031				-0.025		
NPERCEVF	0.066 #	0.029				0.061		
PEROLAP	-0.034	0.036				0.101		
PERFEED	-0.017	0.034				-0.063		
(Significance test - Path variables:)					16.831 **			**

APPENDIX E-4D

PATH ANALYSIS: MULTIPLE REGRESSION ANALYSIS REPORT

** = p < 0.001
* = p < 0.01
# = p < 0.05
@ = p < 0.10

DEPENDENT VARIABLE : JOBSAT ; JOB SATISFACTION

HIERARCHY LEVEL : CATEGORY B

FIRST SURVEY RESULTS: (n = 421)						SECOND SURVEY: (n = 150)		
VARIABLE	BETA	STD ERROR	R.SQ.	CHANGE IN R.SQ.	F-VALUE	BETA	R.SQ.	CHANGE IN R.SQ.
STEP 1, CONTROLLED VARIABLES:			0.071	0.071	3.136 **		0.092	0.092
BIOGRAPHICAL VARIABLES:								
MARR	-3.122 #	1.289				0.523		
AGE	0.125 #	0.057				-0.052		
LANG	-0.130	0.238				-0.330		
EDUC	-0.145	0.400				-0.187		
SITU	-1.867 #	0.829				-2.472 @		
COURSE	1.542 @	0.803				-0.142		
YEARS	0.095	0.067				0.213 #		
PERSONALITY VARIABLES:								
NEEDIND	-0.236 #	0.100				-0.026		
LOCCONT	0.099	0.117				0.282		
AUTHORM	0.096	0.116				0.057		
STEP 2, PATH VARIABLES:			0.336	0.265	10.131 **		0.457	0.365 **
NPERCATT	0.212 #	0.103				0.035		
NPERCEVF	0.329 **	0.091				0.546 **		
PEROLAP	0.145	0.120				0.623 *		
PERFEED	0.221 #	0.110				-0.157		
PFNPAR	0.176 @	0.103				0.053		
FINSAT	0.308 *	0.097				0.301 @		
PPAGWD	0.502 **	0.129				-0.223		
PPSAFE	0.242 @	0.133				-0.345		
PPGOAL	-0.168 #	0.070				0.100		
GWDSAT	-0.252	0.167				0.673 #		
(Significance test - Path variables:)					15.979 **			**

APPENDIX E-4E

PATH ANALYSIS: MULTIPLE REGRESSION ANALYSIS REPORT

** = p < 0.001
* = p < 0.01
# = p < 0.05
@ = p < 0.10

DEPENDENT VARIABLE : GRNPERF; CONSOLIDATED EMPLOYEE PERFORMANCE

HIERARCHY LEVEL : CATEGORY B

FIRST SURVEY RESULTS: (n = 421)						SECOND SURVEY: (n = 150)		
VARIABLE	BETA	STD ERROR	R.SQ.	CHANGE IN R.SQ.	F-VALUE	BETA	R.SQ.	CHANGE IN R.SQ.
STEP 1, CONTROLLED VARIABLES:			0.114	0.114	5.265 **		0.035	0.035
BIOGRAPHICAL VARIABLES:								
MARR	0.617	1.226				1.470		
AGE	0.167 *	0.054				-0.031		
LANG	0.445 #	0.226				-0.510		
EDUC	-1.085 *	0.380				0.109		
SITU	0.070	0.788				-0.358		
COURSE	0.861	0.764				0.153		
YEARS	-0.014	0.064				0.065		
PERSONALITY VARIABLES:								
NEEDIND	-0.169 @	0.096				0.059		
LOCCONT	0.208 @	0.112				0.078		
AUTHORM	-0.051	0.111				0.095		
STEP 2, PATH VARIABLES:			0.268	0.154	8.665 **		0.311	0.276 **
NPERCATT	-0.057	0.105				-0.105		
NPERCEVF	0.309 **	0.091				0.231		
PEROLAP	0.209 @	0.121				-0.078		
PERFEED	0.238 #	0.110				0.269		
JOBSAT	0.144 *	0.049				-0.059		
FINSAT	0.127	0.085				0.472 **		
GWDSAT	-0.079	0.161				0.262		
(Significance test - Path variables:)					12.098 **			**